Los Angeles Department of Water & Power

2012 Ten-Year Transmission Assessment

APPROVED BY:

ARAM BENYAMIN

SENIOR ASSISTANT GENERAL MANAGER

POWER SYSTEM

RANDY S. HOWARD

DIRECTOR

POWER SYSTEM PLANNING & DEVELOPMENT

MOHAMMED J. BESHIR

ASSISTANT DIRECTOR

POWER SYSTEM PLANNING & DEVELOPMENT

December 2012

System Planning

Power System Planning & Development

Los Angeles Department of Water & Power

2012 Ten-Year Transmission Assessment

December 2012

System Planning

Power System Planning & Development

Table of Contents

EXECUTIVE SUMMARY 1

Table 1. FINDINGS AND RECOMMENDATIONS *4*

INTRODUCTION 5

METHODOLOGY 7

WECC REFERENCE CASE. 7
ANALYSIS. 7
CRITERIA. 8

ASSUMPTIONS 10

LADWP LOADS. 10
Table 3. 2012 LADWP POWER FLOW BUS LOADS (MW) *10*
Table 4. RECEIVING STATION (RS) PEAK LOADS (MW) *11*
INFRASTRUCTURE IMPROVEMENTS AND EXPANSION. 12
Table 5. PLANNED SYSTEM ENHANCEMENTS *12*
Table 6. RENEWABLE GENERATION ADDITIONS (MW) *12*
GENERATION. 13
Table 8. ELECTRIC SUPPLY-DEMAND BALANCE (MW) *14*
Table 9. FLOWS ALONG MAJOR TRANSMISSION CORRIDORS IN STUDY CASES (MW) *14*

ASSESSMENT RESULTS 15

(N-0) OR NO CONTINGENCIES 15
(N-1) CONTINGENCIES. 15
Table 10. Overloads on Haskell Canyon-Sylmar from (N-1) Contingency *15*
(N-2) CONTINGENCIES. 15
Table 11. Overloads on Scattergood-Olympic from (N-2) Contingencies *15*
Table 12. Overloads on Northridge-Tarzana from (N-2) Contingencies *16*
EXTREME EVENTS — MULTIPLE CIRCUIT OUTAGES 16
Table 13. OUTCOME OF MULTIPLE CONTINGENCIES *16*
LIGHT WINTER 2017 SCENARIOS. 17
HEAVY WINTER 2015 SCENARIOS. 17
Table 14. POWER FLOWS ALONG MAJOR SOUTHERN CALIFORNIA TRANSMISSION CORRIDORS IN HEAVY AND LIGHT WINTER STUDY CASES *18*
Table 15. DISTRICT LOADS IN HEAVY AND LIGHT WINTER STUDY CASES (MW) *18*
Table 16. GENERATION MIX IN HEAVY AND LIGHT WINTER STUDY CASES (MW) *19*
STABILITY. 19

SUMMARY OF FINDINGS 20

Table 17. FINDINGS AND RECOMMENDATIONS *22*

RECOMMENDATIONS 23

Appendices

APPENDIX A. NERC/WECC PLANNING STANDARDS

APPENDIX B. RECEIVING STATION LOADS

APPENDIX C. GENERATION SCHEDULE FOR LADWP-OWNED FACILITIES

APPENDIX D. TRANSMISSION LINE CAPACITIES

APPENDIX E. ONE-LINE DIAGRAMS

APPENDIX F. LIST OF CONTINGENCIES STUDIED

APPENDIX G. SWITCHING SEQUENCES FOR TRANSIENT AND POST-TRANSIENT

APPENDIX H. POWER FLOW RESULTS

APPENDIX I. TRANSIENT AND POST-TRANSIENT STABILITY RESULTS

APPENDIX J. RENEWABLE TRANSMISSION EXPANSION PROJECT

APPENDIX K. LONG-TERM TRANSMISSION PLAN

APPENDIX L. VICTORVILLE/ADELANTO TO LA BASIN MID-TERM UPGRADE

2012 Ten-Year Transmission Assessment

Executive Summary

The 2012 Ten-Year Transmission Assessment (2012 Assessment) covers years 2013 to 2022. Summer peak (1-in-10 peak) system conditions are modeled for the year 2013, 2018, and 2022. The Los Angeles Department of Water and Power's (LADWP) 2012 Assessment is compliant with the four NERC Transmission Planning Standards:

1. TPL-001-0.1- System Performance Under Normal (No Contingency) Conditions (Category A)
2. TPL-002-0b - System Performance Following Loss of a Single Bulk Electric System Element (Category B)
3. TPL-003-0a- System Performance Following Loss of Two or More Bulk Electric System Elements (Category C)
4. TPL-004-0- System Performance Following Extreme Events Resulting in the Loss of Two or More Bulk Electric System Elements (Category D)

The 2012 Assessment meets the following NERC Standard Measurements:

1. The Bulk Electric System (BES) shall be tested for steady-state, transient, dynamic, and voltage stability with all facilities in service, checking to find that all facilities are within their facility ratings and within their thermal, voltage, and stability limits.
2. The BES shall be tested for normal conditions (Category A), checking to find that all facilities are within their facility ratings and within their thermal and voltage limits.
3. The BES shall be tested for transient, dynamic, and voltage stability following single contingencies (Category B) and multiple contingencies (Categories C and D), checking to find that all facilities are within their facility ratings and within their thermal, voltage, and stability limits.

This 2012 Assessment also supports the LADWP' 2012 Power Integrated Resource Plan

With management's approval, this transmission assessment shall be a publicly available document and therefore made available to NERC and WECC. Identification of critical assets may be redacted for the general public.

This 2012 Assessment is based on WECC-approved case 2012HS4-OP which models anticipated heavy summer conditions with heavy flows from the Pacific Northwest to California and moderate flows elsewhere.

LADWP system loads for each study year are shown in Table 3 and are modeled according to the LADWP Demand Forecast dated March 7, 2012. System studies were conducted consisting of steady state load flow analysis, transient stability analysis, and post-transient voltage stability analysis after incorporating planned system improvements and expansions, as well as resource acquisitions.

This 2012 Assessment does not indicate any Interconnection Reliability Operating Limit (IROL) conditions or any post-contingency stability limits in the next ten years.

Full analyses of all credible outages listed in Appendix F reveals the existing and planned system should be able to sustain every studied contingency except for the following:

(1) A simultaneous (N-2) outage of Rinaldi-Tarzana 230kV Lines 1 & 2 as early as Summer 2013 would overload the terminal equipment on Northridge-Tarzana 230kV Line 1.

(2) A simultaneous (N-2) outage of the Tarzana-Olympic 230kV Line 1 & the Tarzana-Olympic 138kV Line 1 during a summer heat storm would overload Scattergood-Olympic 230kV Line 2 until Scattergood-Olympic 230kV Cable A is placed in service in 2015.

(3) A simultaneous (N-2) outage of Rinaldi-Tarzana 230kV Lines 1 & 2 during a summer heat storm would overload Scattergood-Olympic 230kV Line 2 until Scattergood-Olympic Cable A is placed in service in 2015

(4) A simultaneous (extreme event) outage of three elements consisting of Rinaldi-Tarzana 230kV Lines 1& 2 and Northridge-Tarzana 230 kV Line 1 during a summer heat storm in 2015 would cause local low voltages at RS-U (Tarzana) and RS-T (Canoga)

(5) Under the light winter 2015 conditions, the installation of Scattergood-Olympic Cable A would cause severe high voltage violations at Scattergood, RS-K (Olympic) and RS-H (Hollywood).

(6) Planned solar projects between Inyo substation and Cottonwood tap would cause severe low voltage violations at Cottonwood as early as Summer 2018.

(7) A simultaneous (extreme event) outage of three elements consisting of Toluca-Hollywood 230kV Lines 1& 3 and Toluca-Hollywood 138 kV Line 2 during a summer heat storm in 2018 would cause local low voltage at RS-H (Hollywood).

(8) A single (N-1) outage of Haskell Canyon-Rinaldi 230 kV Line may overload the Haskell Canyon-Sylmar 230 kV Line as early as Summer 2018.

To mitigate these overloads, the following corrective actions are recommended. These measures will satisfy the applicable NERC planning standards for contingency or post-contingency system performance [a] :

(1) During the 2013 Summer Peak, continue using a selective load-shedding program at RS-U (Tarzana) to relieve the overload on the Northridge-Tarzana 230kV Line 1 during a double contingency outage of Rinaldi-Tarzana 230kV Lines 1 & 2. The load-shedding will be needed until the ampacity-limited terminal equipment (circuit breakers and disconnects) on the Northridge-Tarzana 230kV Line 1 are upgraded in 2015.

The following three recommendations all utilize load shedding as an interim measure until the new Scattergood-Olympic 230 kV Cable A is put in-service in June 2015:

[a] NERC TPL-002-0b for N-1 (Category B) , NERC TPL-003-0a for N-2 (Category C)

(2) Through 2014, implement a selective load-shedding program at RS-K (Olympic) to relieve the overload on Scattergood-Olympic 230kV Line 2 during a double contingency outage of Tarzana-Olympic 230kV Line 1 and the Tarzana-Olympic 138kV Line 1.

(3) Through 2014, implement a selective load-shedding program at RS-U (Tarzana) and RS-K (Olympic) to relieve the overload on Scattergood-Olympic 230kV Line 2 during a double contingency outage of Rinaldi-Tarzana 230kV Lines 1 & 2.

(4) Starting with Summer 2014, implement a selective under-voltage load-shedding program at RS-T to mitigate local low voltages at RS-U (Tarzana) and RS-T (Canoga) for the simultaneous outage of Rinaldi-Tarzana 230kV Lines 1& 2 and Northridge-Tarzana 230 kV Line 1. This triple line outage is considered an extreme event.

(5) Before Winter 2015, resolve the high voltage violations at Scattergood, RS-K (Olympic), and RS-H (Hollywood) by installing one variable 90-MVAR variable shunt reactor bank at Scattergood 230 kV, and one variable 90-MVAR shunt reactor bank at RS-K (Olympic) 230 kV as recommended in the 2012 DWP Reactive Power Study .

(6) Before Summer 2018, resolve the low voltage violation at Cottonwood tap by adding four 25-MVAR capacitor banks with a spare 25-MVAR capacitor bank at the new solar collector substation.

(7) Before Summer 2018, implement direct or under-voltage load-shedding program at RS-H (Hollywood) to mitigate local low voltage at RS-H (Hollywood) for the simultaneous outage of Toluca-Hollywood 230kV Lines 1&3 and Toluca-Hollywood 138 kV Line 2. This triple line outage is considered an extreme event.

(8) Before Summer 2018, resolve overloads on the Haskell Canyon-Sylmar 230 kV Line during a loss of the Haskell Canyon-Rinaldi 230 kV Line 1 by completing the following two system upgrades:

- Relocate the 230/115 kV Banks from Olive Switching Station to Haskell Canyon Switching Station and terminate the 115 kV PPA and PP2 lines at Haskell Canyon

- Convert the existing twin 115 kV circuits between Haskell Canyon Switching Station and Olive Switching Station with a new double 230 kV circuit along the existing 115 kV right-of-way. Extend one wire from Olive Switching Station to Sylmar Switching Station using the vacant position on the existing towers. Terminate the other wire at Olive Switching Station to form Haskell Canyon – Olive Line 2.

This 2012 Assessment also explores non-TPL conceptual transmission plans which would enhance LADWP's transmission capability beyond the ten-year horizon. Appendix K lists three most cost effective long-term transmission expansion projects with minimum environmental impacts.

For short-term conceptual plan, two sensitivity scenarios, in which the Victorville-to-Los-Angeles-Basin (VIC-LA) transmission system is loaded up to 4014 MW and 4419 MW or 103% and 113% above the existing 2012 summer System Operating Limit, were assessed in the 2018 heavy summer conditions. In these scenarios, several critical (N-1) and (N-2) contingencies would likely overload a number of VIC-LA system components. However, no recommendations are made at this time, since the studied scenarios are highly conceptual. Appendix L summarizes results of these stressed VIC-LA scenarios.

Table 1 summarizes the findings and recommendations of the 2012 Assessment.

Table 1. FINDINGS AND RECOMMENDATIONS

Year	Outage(s)	Reliability Category	Overloaded Line or System Violation	Recommendation
Summer Peak 2013 Through Summer Peak 2014	Rinaldi-Tarzana 230kV Lines 1 & 2	C (TPL-003-0a)	Terminal equipment on Northridge-Tarzana 230kV Line 1	Selectively shed load at RS-U (Tarzana) (~ 8 MW) for short term. Upgrade circuit breakers and disconnects to higher rating.
Summer Peak 2013 Through Summer Peak 2015	Tarzana-Olympic 230kV Line 1 & Tarzana-Olympic 138kV Line 1	C (TPL-003-0a)	Scattergood-Olympic 230kV Line 2	Selectively shed load at RS-K (Olympic) (~200 MW) and RS-U (~25 MW) for short term. Add new Scattergood-Olympic 230 kV Cable A for long term.
Summer Peak 2013 Through Summer Peak 2014	Rinaldi-Tarzana 230kV Lines 1& 2	C (TPL-003-0a)	Scattergood-Olympic 230kV Line 2	Selectively shed load at RS-K (Olympic) (~125 MW) Add new Scattergood-Olympic 230 kV Cable A for long term.
Summer Peak 2014 Onward	Rinaldi-Tarzana 230kV Lines 1& 2 and Northridge-Tarzana 230 kV Line 1	D (TPL-004-0)	Local voltage collapse	Suggested under-voltage load shedding program in RS-T (Canoga).
Winter 2015	No Outage	A (TPL-001-0.1)	High voltage violations at Scattergood, Olympic, and Hollywood	Install a variable 90-MVAR shunt reactor bank at Scattergood 230 kV and a variable 90-MVAR shunt reactor bank at RS-K (Olympic) 230 kV
Summer 2018	No Outage	A (TPL-001-0.1)	Low voltage violation at Cottonwood tap due to the addition of the planned solar projects	Install four 25-MVAR capacitor banks with a spare 25 MVAR capacitor bank at the new solar collector substation.
Summer 2018	Toluca-Hollywood 230kV Lines 1& 3 and Toluca-Holywood 138 kV Line 1	D (TPL-004-0)	Local low voltage	Suggested direct or under-voltage load shedding program in RS-H (Holllywood).
Summer Peak 2018	Haskell Canyon-Rinaldi 230 kV Line 1	B (TPL-002-0b)	Haskell Canyon-Sylmar 230 kV Line 1	The following system upgrades are required : • Relocate the 230/115 kV Banks from Olive Switching Station to Haskell Canyon Switching Station. • Convert the existing twin 115 kV circuits between Haskell Canyon Switching Station and Olive Switching Station with a new double 230 kV circuit along existing 115 kV right-of-way. Extend one wire from Olive Switching Station to Sylmar Switching Station using the vacant position on the existing towers to form Haskell Canyon-Sylmar Line 2. Terminate the other wire at Olive Switching Station to form Haskell Canyon – Olive Line 2.

Introduction

The City of Los Angeles' (City) transmission system consists of high voltage (above 500kV) alternating current (AC) and direct current (DC) transmission corridors and a 115kV-to-230kV in-basin network totaling more than 3,600 miles. Of those, high voltage AC and DC transmission lines alone account for 2,900 miles and provide over 5000MW of import capability. The City utilizes these resources to transport power from the Pacific Northwest, Utah, Arizona, Nevada, and within California to serve its customers and to wheel power for the Cities of Burbank and Glendale. In addition, the City's transmission system is interconnected with other utilities in the Western Electricity Coordinating Council (WECC) to coordinate and promote electric reliability throughout the Western United States. Thus, the importance of the security and adequacy of the City's transmission system extends beyond its physical boundaries. A drawing of LADWP's Power System is provided in Figure 1.

This 2012 Assessment covers years 2013 to 2022. Summer peak (1-in-10 peak) system conditions are modeled for years 2013, 2018 and 2022.

As in previous years, the Los Angeles Department of Water and Power's (LADWP's) 2012 Ten-Year Transmission Assessment is fully NERC-compliant. Transmission Planning annually performs a ten-year transmission assessment, as required by NERC to:

- ensure the City's electrical demand and energy requirements are met at all times under normal conditions (TPL-001-0.1);
- ensure the City's electrical system is able to withstand and respond to unanticipated system disturbances, losses of system components (TPL-002-0b and TPL-003-0a), and disturbances arising from switching operations;
- assess system performance following extreme events (TPL-004-0).

The specific transmission planning standards in effect at the time of this 2012 assessment, and to which this assessment fully adheres, are:

1. TPL-001-0.1. System Performance Under Normal (No Contingency) Conditions (Category A)
2. TPL-002-0b. System Performance Following Loss of a Single Bulk Electric System Element (Category B)
3. TPL-003-0a. System Performance Following Loss of Two or More Bulk Electric System Elements (Category C)
4. TPL-004-0. System Performance Following Extreme Events Resulting in the Loss of Two or More Bulk Electric System Elements (Category D)

By responsibly addressing any concerns identified in this assessment before they become critical system limitations, LADWP should minimize system infrastructure costs, an important consideration in maintaining competitive electric rates.

POWER SYSTEM DIAGRAM

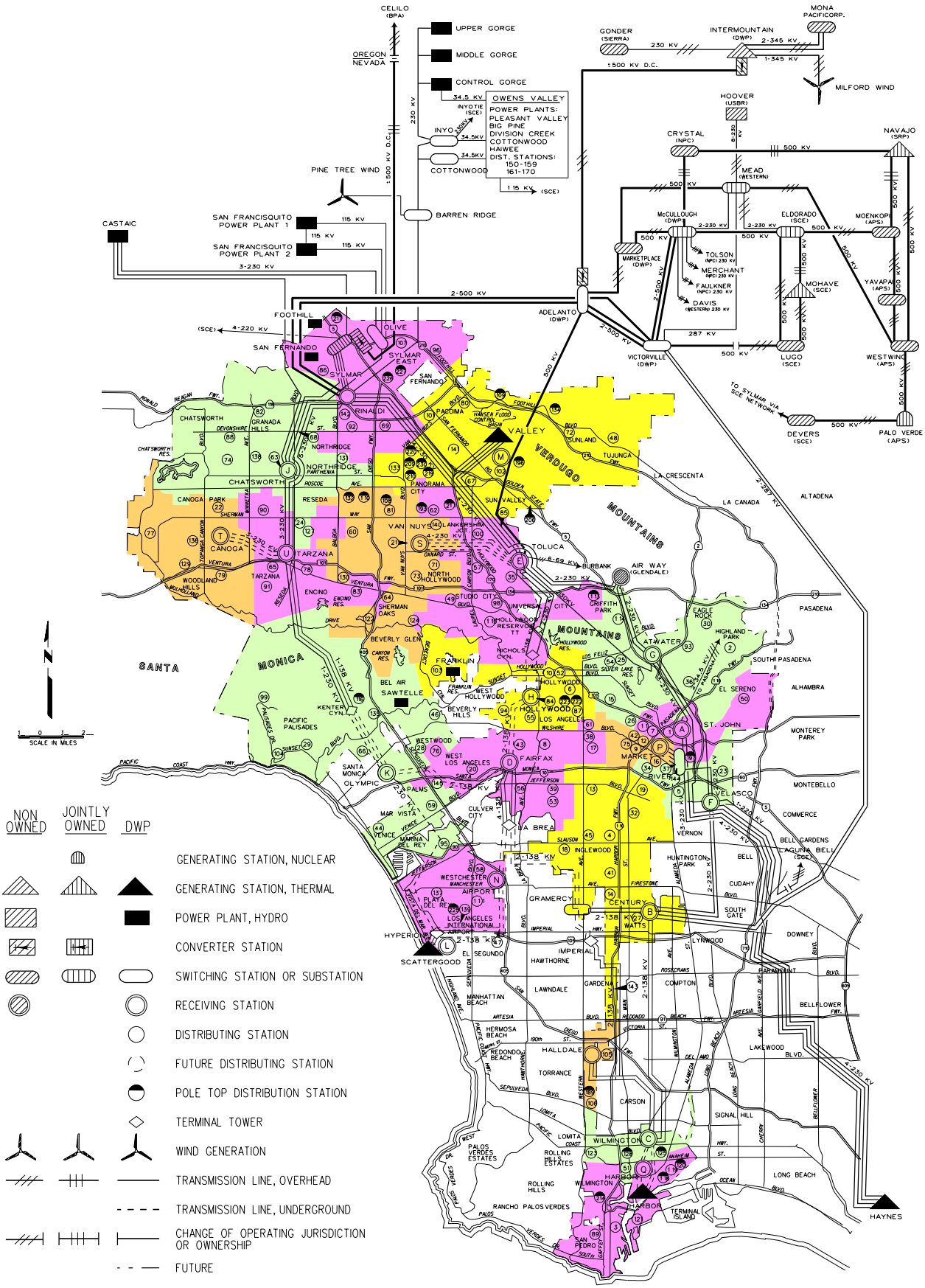

POWER SYSTEM PLANNING AND DEVELOPMENT
TRANSMISSION PLANNING GROUP

OES-LCM67
JULY 2010
REV. 16

Methodology

WECC Reference Case. Study cases were developed from the WECC-approved 2012HS4-OP case which models the expected power flows throughout the Western United States during heavy summer conditions, with heavy flows from the Pacific Northwest to California and moderate flows elsewhere.

Table 2 summarizes the power flows along major transmission corridors in the reference case that are relevant to this 2012 Assessment. These flows are scheduled above the projected LADWP's firm transfer levels to represent a reasonably stressed system.

TABLE 2. POWER FLOW ALONG THE MAJOR SOUTHERN CALIFORNIA TRANSMISION CORRIDORS IN THE REFERENCE BASE CASE (MW)

TRANSMISSION CORRIDOR	RATING (MW)	REFERENCE BASE CASE	
		Power Flow (MW)	% of Rating
Pacific DC Intertie (Path 65)	3100	2780	90%
Intermountain DC Line (Path 27)	2400	1749	73%
East-of-the-Colorado River (Path 49)	9300	4531	49%
West-of-the-Colorado River (Path 46)	10623	6065	57%
Victorville - Lugo 500kV Line 1 (Path 61)	2400	1268	52%
LADWP - SCE @ Sylmar (Path 41)	1600	-266	16%
Adelanto - Toluca 500kV Line 1	3950[b]	861	57%
Adelanto - Rinaldi 500kV Line 1		542	
Victorville - Rinaldi 500kV Line 1		479	
Victorville - Century1 287kV Line 1		191	
Victorville - Century2 287kV Line 1		191	

Analysis. A minimum of one study case is developed from the 2012HS4-OP reference case for each study year, 2013, 2018, and 2022. Each study case models the LADWP system as it is likely to be configured on a 1-in-10 year peak summer day to capture the critical system conditions for each year.

[b] Based on the LADWP 2012 Summer Assessment conducted by Security Assessment Group

Initially, power flow studies are conducted for each study case with all transmission facilities in-service (N-0) and operating normally. Disturbances are then simulated such that all single-transmission line or transformer outages (N-1) and all credible double-transmission line outages (N-2) are studied in turn. The results from these studies identify the transmission lines vulnerable to thermal overloads or significant voltage depression. Appendix H tabulates power flow analysis results. The most severe of these scenarios are further studied for post-transient stability and reactive margins.

As a summer-peaking system, LADWP plans its outages at cooler times of the year. Therefore, planned outages as initial conditions are not modeled in this 2012 Assessment.

Transient stability is investigated for line outages of critical transmission paths to identify any inter-regional impact and to ensure system adequacy and security. Control devices such as HVDC controls, SVC controls and all other controls are included in the WECC dynamic database. Protective systems such as Under-frequency Load Shedding are also included in the WECC dynamic database, whereas relevant remedial action schemes are listed in the switching sequence files which drive the dynamic simulation.

Where study results show that transmission paths are constrained, overloaded, or unstable, recommendations to mitigate or alleviate the problems are provided.

Criteria. Annual transmission assessments are performed to comply with NERC/WECC Planning Standards (Appendix A) and to fulfill WECC's requirement that each utility independently performs such a reliability assessment and demonstrates compliance with the NERC/WECC standards.

Power Flow. In addition to the NERC and WECC requirements, LADWP has established performance standards for its in-basin electric system as follows:

1. With all transmission system components in service (N-0), the in-basin electric system shall not experience the following:

    a. Interruption of load

    b. Bus voltage less than 0.99 pu

    c. With the worst-case generating unit off-line, operation of a transmission system component at a level in excess of its normal rating.

2. A Single Contingency (N-1) shall not result in any of the following:

    a. Interruption of load

    b. Bus voltage less than 0.95 pu

    c. With the worst-case generating unit off-line, operation of a transmission system component at a level in excess of its emergency rating.

Transient and Post-Transient Stability. Transient and post-transient performance under the various contingencies described in Appendix G shall meet the following additional requirements:

Transient Stability:

1. All machines in the system shall remain in synchronism as demonstrated by their relative rotor angles

2. Induction motors shall be modeled at 20% of the total load across the WECC region

3. System stability shall be evaluated based on the damping of the relative rotor angles and the damping of the voltage magnitude swings

4. The transient voltage dip should be maintained above 0.80pu at Adelanto and Sylmar

Post-Transient Stability

1. All loads shall be modeled as constant MVA during the first few minutes following an outage or disturbance.

2. All voltages at distribution substations shall be restored to normal values by the transformer tap changers and other voltage control devices.

3. Generator MVAR limits shall be modeled as a single value for each generator since the reactive power capability curve will not be modeled in the program output.

4. No manual operator intervention is allowed to increase the generator MVAR flow.

5. Remedial actions such as generator dropping, load shedding and blocking of automatic generation control (AGC) shall not be considered for single contingencies.

6. Shunt capacitors (132 MVAR) at Adelanto and Marketplace shall be used if the post-transient voltage deviation exceeds 5% at those buses. Although modeled as shunt capacitors the actual devices are automatically controlled Static Var Compensators (SVCs).

7. Other assumptions:
    - Area Interchange: Disabled
    - Governor Blocking: Base load flag shall be used per WECC practice
    - DC Line Transformer Tap Automatic Adjustment: Enabled
    - Generator Voltage Control set to local except for Palo Verde, and selected Northwest generation
    - Phase Shifter Control: Disabled
    - Switched Shunt Devices: Disabled

Assumptions

LADWP Loads. One-in-ten year summer heat storms, as represented in the "2012 Retail Electric Sales and Demand Forecast" signed on March 7, 2012 are modeled each studied year in the study. This 2012 Assessment which uses gross 1-in-10 demand is consistent with the net 1-in-10 demand used in the 2011 Assessment. Gross Demand is the sum of Net Demand and Cogeneration. Table 3 tabulates the total gross bus load represented in the ten-year power flow.

Table 3. 2012 LADWP POWER FLOW BUS LOADS (MW)

Year	Net 1-in-10	Co-Generation	Gross 1-in-10	OV & Losses	Total Gross Bus Load
2013	6014	238	6252	513	5739
2014	6042	243	6285	522	5763
2015	6028	248	6276	531	5745
2016	6026	252	6278	539	5739
2017	6034	254	6288	546	5742
2018	6099	256	6355	553	5802
2019	6172	258	6430	560	5870
2020	6244	261	6505	568	5937
2021	6342	264	6606	576	6030
2022	6409	267	6676	584	6092

Receiving Station loads are scaled according to the "Receiving Station and Distributing Station Load Forecast – 2011 to 2020" distributed February 28, 2012. Loading at receiving station banks are generally developed with the power factors provided in the Receiving Station/Distribution Station Forecast, but with some modification to match available historical peak load data. Table 4 lists the forecasted real power loads at the receiving station level. Appendix B lists the coincidental peak real and reactive power loads at the receiving stations.

Table 4. RECEIVING STATION (RS) PEAK LOADS (MW)

Service Area	Receiving Station	2013	2014	2015	2016	2017	2018	2019	2020	2021	2022
Central	Airport	212					213				224
	Atwater	310					319				335
	Century	296					310				326
	Fairfax	390					397				412
	Hollywood	413					408				429
	Market (River)	362					361				375
	Olympic	399					426				448
	Scattergood	28					26				27
	St. John	222					225				236
	Velasco	222					223				235
	Total Central Load	**2854**					**2909**				**3086**
Southern	Halldale	49					50				52
	Harbor	202					202				211
	Wilmington	164					165				171
	Total Southern Load	**415**					**416**				**434**
Valley	Canoga	370					358				373
	Northridge	539					556				585
	Rinaldi	301					302				319
	Tarzana	339					348				369
	Toluca	399					399				422
	Valley	323					314				331
	Van Nuys	428					432				457
	Total Valley Load	**2699**					**2710**				**2856**
Total Receiving Station Load		**5969**					**6034**				**6336**
Diversity Factor		1.04					1.04				1.04
Total Coincidental Receiving Station Load		**5739**					**5802**				**6092**
Owens Valley Load & Transmission Losses		513					553				584
1-in 10 Peak Load Forecast[c]		**6252**					**6355**				**6676**

Burbank and Glendale Loads. One-in-ten peak load forecasts of the cities of Burbank and Glendale modeled in each study case.

[c] Forecast estimates customer generation of 238 MW of 2013 increase to 267 MW in 2022

Infrastructure Improvements and Expansion. Table 5 lists the infrastructure improvements, expansion projects, and resource re-powering captured in this 2012 Ten-Year Transmission Assessment.

Table 5. PLANNED SYSTEM ENHANCEMENTS

System Enhancements	In-Service Date	Initial Model Year
Castaic Power Plant Modernization	January 2013	2013
Haynes Generating Station Re-powering Phase 2	July 2013	2013
Scattergood-Olympic 230KV Line 1	June 2015	2018
RS-C Bypass	March 2015	2018
Scattergood Generating Unit 3 Re-powering	December 2015	2018
Barren Ridge-Haskell 230kV Lines 2 & 3 (new) (*)	April 2016	2018
Barren Ridge-Rinaldi 230kV Line 1 (upgrade) (*)	December 2016	2018

(*) The new Barren Ridge-Haskell 230kV Lines and the upgraded Barren Ridge-Rinaldi 230kV Line are part of the Renewable Transmission Expansion Project as illustrated in Appendix J

Table 6 lists Renewable generation additions to the LADWP Balancing Authority area that were modeled in the 2012 Assessment.

Table 6. RENEWABLE GENERATION ADDITIONS (MW)

Project	Capacity MW	In-Service Date	Initial Model Year
Pine Tree Solar	8.5	Dec-2012	2013
Adelanto Solar	10	Jun-2012	2013
Q03	250	Jan -2016	2018
Q09	200	2017	2018
Q11	60	Dec-2015	2018
Q24	250	Dec-2013	2018
Q35	350	Feb-2014	2018
Q15A	150	Dec-2018	2022
Q15	100	Jul-2019	2022

Generation. LADWP's existing and future resources are capable of producing up to 6428 MW internally and 2778 MW externally. Table 7 shows how LADWP's resources are dispatched in this study; unit commitments are provided in Appendix C.

Resource Type	2018 Capacity (MW)	2013	2018	2018 Hi Castaic	2018 Hi Vic-LA	2022	2022 Hi Castaic
Pumped Storage	1247	128	87	1153	10	116	1042
Natural Gas	3638	1937	1367	1367	1352	1577	1717
Wind	285	82	172	172	172	172	172
Solar	649	18	400	400	400	462	462
Hydroelectric	177	160	160	160	160	160	160
Internal Generation	***5996***	***2325***	***2186***	***3252***	***2094***	***2487***	***3553***
% of Total Generation	65%	48%	46%	61%	43%	49%	63%
Hydroelectric	495	491	495	495	495	495	495
Wind	304	120	120	120	304	120	120
Solar	500	0	500	0	500	500	0
Coal	1569[d]	1569	1092[e]	1092	1092	1092	1092
Nuclear	387	387	387	387	387	387	387
External Generation(*)	***3355***	***2594***	***2094***	***2094***	***2778***	***2594***	***2094***
% of Total Generation	35%	52%	54%	39%	57%	51%	37%
Total Generation	**9251**	**4892**	**4780**	**5364**	**4872**	**5081**	**5647**

(*) *External Generation represents projected firm transfer for each of the ten years*

This 2012 Assessment shows that sufficient capacity is available to meet the Renewable Portfolio Standard target of 33% provided that certain renewable resources are imported using (a) transmission from the retired Navajo coal generation facility, (b) the Pacific DC Intertie, and (c) 131 MW of roof top solar goals in 2018[f]. Appendix C shows the breakdown of renewable energy resources represented in the 2018 Heavy Summer study case with LADWP reaching its 33% RPS target, respectively.

Transmission. LADWP's extensive transmission system of more than 3,000 circuit miles reaching beyond its neighboring states facilitates access to low cost power purchases and LADWP's external generation. As Table 8 shows, over 60 percent of LADWP's power needs are served by heavily leveraging these transmission assets. Over the next ten years, additions

[d] Includes DWP's Navajo shares

[e] Excludes DWP's Navajo Shares

[f] The 10 Year Transmission Assessment takes a snap-shot of the system at the hours of the highest stress on the electrical system. This peak snapshot will likely have a lower than average renewable mix because thermal peaking units are required on peak hours. In contrast to thermal peaking units, renewable resources are used any hour they are available, all year long. Because the renewable target is the annual energy consumed, regardless what is seen in a single snap-shot, the actual resource mix could be substantially lower on the most stressed hours without preventing LADWP from meeting its RPS's goal.

of approximately 100 circuit-miles of transmission will increase LADWP's access to renewable energy intrastate.

Table 8. ELECTRIC SUPPLY-DEMAND BALANCE (MW)

	2013	2018	2022
LADWP Receiving Station Load	5739	5802	6092
System Losses	513	553	584
Total Power Requirement	**6252**	**6355**	**6676**
Internal Generation	***2325***	***2186***	***2487***
% Power Requirement	*37%*	*34%*	*38%*
External Generation & Purchases	***3927***	***4169***	***4189***
% Power Requirement	*63%*	*66%*	*62%*

Table 9 summarizes the power flows along LADWP's major transmission paths in this 2012 Assessment.

Table 9. FLOWS ALONG MAJOR TRANSMISSION CORRIDORS IN STUDY CASES (MW)

TRANSMISSION CORRIDOR	RATING (MW)	BASE CASE					
		2013	2018	2018 Hi Castaic	2018 Hi Vic-LA	2022	2022 Hi Castaic
Pacific DC Intertie (Path 65)	3100	2780	2780	2780	725	2780	2780
Intermountain DC Line (Path 27)	2400	1749	1748	1148	2400	1749	1148
East-of-the-Colorado River (Path 49)	9300	4531	4287	4303	5393	4290	4306
West-of-the-Colorado River (Path 46)	10623	6065	6314	5846	7515	6318	5850
Victorville - Lugo 500kV Line 1 (Path 61)	2400	1268	1215	1123	1169	1212	1122
LADWP - SCE @ Sylmar (Path 41)	1600	-266	-324	34	-142	-320	26
Adelanto - Toluca 500kV Line 1		861	959	771	1256	966	773
Adelanto - Rinaldi 500kV Line 1		542	577	336	978	576	339
Victorville - Rinaldi 500kV Line 1	3905	479	514	296	885	513	298
Victorville - Century1 287kV Line 1		191	216	186	263	216	184
Victorville - Century2 287kV Line 1		191	216	186	263	216	184

Assessment Results

- **(N-0) or No contingencies.** The LADWP system meets the performance requirements of Category A in all study cases except one. With the addition of the solar project from 2015 to 2018, the voltage may be unacceptably low at Cottonwood tap in 2018

- **(N-1) Contingencies.** Simultaneous High Castaic output and high renewables in Owens Valley scenario would result in one potential overload on the Haskell Canyon-Sylmar 230 kV Line 1 for the loss of Haskell Canyon-Rinaldi 230 kV Line 1

. **Haskell Canyon-Sylmar 230kV Line Overloads**

Table 10 shows that projects to mitigate overloads on Haskell Canyon-Sylmar 230 kV Line 1 need to be completed by 2018.

Table 10. Overloads on Haskell Canyon-Sylmar from (N-1) Contingency

Single Outage	Overloaded Line	Loading	Study Year
Haskell Canyon-Rinaldi 230kV Line 1	Haskell Canyon –Sylmar 230kV Line 1	101%	2018

- **(N-2) Contingencies.** Performance criteria were not met with regard to (a) Scattergood-Olympic 230kV Line 2 overloads and (b) Northridge-Tarzana 230kV Line 1 terminal equipment (circuit breakers and disconnects) overloads.

Scattergood-Olympic 230kV Line Overloads

Table 11 shows that overloads on Scattergood-Olympic 230kv Line 2 are remedied by the new Scattergood-Olympic 230 kV Cable A scheduled to be in service in June 2015.

Table 11. Overloads on Scattergood-Olympic from (N-2) Contingencies

Double Outage	Overloaded Component	Loading	Study Year
Rinaldi-Tarzana 230kV Lines 1 & 2	Scattergood-Olympic 230kV Line 2	107%	2013
Rinaldi-Tarzana 230kV Lines 1 & 2	Scattergood-Olympic 230kV Line 2	<90%	2015-21
Tarzana-Olympic 230kV Line 1 & Tarzana-Olympic 138kV Line 1	Scattergood-Olympic 230kV Line 2	120%	2013
Tarzana-Olympic 230kV Line 1 & Tarzana-Olympic 138kV Line 1	Scattergood-Olympic 230kV Line 2	<90%	2015-21

Northridge-Tarzana 230kV Line Overloads

Table 12 shows Northridge-Tarzana 230kV Line 1 needs to be reinforced. Ignoring this work would likely overload the line during a double line outage of Rinaldi-Tarzana Lines 1 & 2 (230kV) during summer heat storms.

Table 12. Overloads on Northridge-Tarzana from (N-2) Contingencies

Double Outage	Overloaded Component	Loading	Study Year
Rinaldi-Tarzana 230kV Lines 1 & 2	Terminal equipment of Northridge-Tarzana 230kV Line 1 : 2 circuit breakers & 2 disconnects @ RS-J. 3 circuit breakers and 6 disconnects @RS-U	>2kA	2013
Rinaldi-Tarzana 230kV Lines 1 & 2	Northridge-Tarzana 230kV Line 1	<90%	2015-22

- **Extreme Events — Multiple Circuit Outages**

NERC maintains no specific requirements for utilities in their examination of system performance following extreme events, so different conditions can be studied from one year to the next. Further, there is no NERC or WECC requirement to plan corrective action for extreme events.

LADWP elects to study extreme events that are credible and potentially harmful to the BES. In this Assessment, the two extreme events studied involve the simultaneous loss of three lines strung on common towers. Two such triple-circuit tower losses were simulated for study year 2018.

Table 13 shows that the loss of a triple-circuit tower which consists of Toluca-Hollywood 230kV lines 1 & 3 and Toluca-Hollywood 138kV Line 2 would result in low voltage violations at RS-H (Hollywood). However, the loss of a triple-circuit tower which carries Rinaldi-Tarzana 230kV Lines 1 and 2 and Northridge-Tarzana 230kV Line 1 would result in local under-voltage conditions at RS-U (Tarzana) and RS-T (Canoga). These under-voltage conditions can be mitigated by under-voltage load-tripping at RS-T and RS-H.

Table 13. OUTCOME OF MULTIPLE CONTINGENCIES

Multiple Contingency	Impacted Elements	Study Year
Loss of Toluca – Hollywood 230kV Lines 1 & 3 and Toluca-Hollywood 138kV Line 2	Low voltage violations at RS-H (Hollywood)	2018
Loss of Toluca – Hollywood 230kV Lines 1 & 3 and Toluca-Hollywood 138kV Line 2 with direct load tripping at RS-H (Hollywood)	None	
Loss of Rinaldi – Tarzana 230kV Lines 1 & 2 and Northridge-Tarzana 230kV Line 1	Local voltage collapse	
Loss of Rinaldi – Tarzana 230kV Lines 1 & 2 and Northridge-Tarzana 230kV Line 1 with direct load-tripping at RS T	None	

Light Winter 2017 Scenarios. Heavy summer studies test the ability of LADWP's transmission system to handle disturbances when equipment are most vulnerable to thermal overloads and the system is susceptible to under-voltage due to the heavy electricity demand. Light winter studies, on the other hand, test the ability of the transmission system to handle over-voltage concerns because the network is intact but only modestly loaded.

Operationally, LADWP imports electricity from the east and Intermountain and exports to the Pacific Northwest through the Pacific DC Intertie during the winter, but imports electricity from the east, Intermountain, and the Pacific Northwest during the summer. By investigating both summer and winter conditions, this 2012 Assessment provides a comprehensive test of LADWP's transmission facilities to ensure these assets operate within their ratings and within their thermal, voltage, and stability limits.

Heavy Winter 2015 Scenarios. As scheduled in the construction phase of the Celilo Converter Replacement Project, Bonneville Power Administration, in coordination with LADWP has planned to temporarily suspend the operation of the Pacific DC Intertie (PDCI) from November 4, 2015 to December 5, 2015. Per requirement R.1.3.12 of TPL-002-0b and TPL-003-0a, this 2012 Assessment also evaluates system performance with the PDCI out-of-service during Heavy Winter 2015 system conditions

Light winter scenarios, for winter 2017, was developed from the WECC-approved 2017-18 LW1AS case which models system conditions with moderate power flows from California to the Pacific Northwest. Heavy winter scenarios, for winter 2015, was developed from the WECC – approved 2012-13 HW2A which models the anticipated operating conditions with moderate power flows from Pacific Northwest into California.

Both the light winter and heavy winter studies were conducted with the same rigor as the heavy summer studies.

Table 14 summarizes the power flows along major transmission corridors in these study cases that are relevant to this 2012 Assessment.

Table 14. POWER FLOWS ALONG MAJOR SOUTHERN CALIFORNIA TRANSMISSION CORRIDORS IN HEAVY AND LIGHT WINTER STUDY CASES

TRANSMISSION CORRIDOR	RATING (MW)	2015 HEAVY WINTER		2017 LIGHT WINTER	
		Power Flow (MW)	% of Rating	Power Flow (MW)	% of Rating
Pacific DC Intertie (Path 65), *South- to-North*	3100	0	0%	1419	46%
Intermountain DC Line (Path 27)	2400	1968	82%	1744	72%
East-of-the-Colorado River (Path 49)	9300	5640	60%	3521	38%
West-of-the-Colorado River (Path 46)	10623	6364	60%	3527	33%
Victorville - Lugo 500kV Line 1 (Path 61)	2400	938	37%	594	24%
LADWP - SCE @ Sylmar (Path 41)	1600	489	33%	267	25%
Adelanto - Toluca 500kV Line 1	4050	1023	78%	774	66%
Adelanto - Rinaldi 500kV Line 1		851		782	
Victorville - Rinaldi 500kV Line 1		872		802	
Victorville - Century1 287kV Line 1		204		151	
Victorville - Century2 287kV Line 1		204		151	

Table 15 aggregates the receiving station bank loads according to their district assignments.

Table 15. DISTRICT LOADS IN HEAVY AND LIGHT WINTER STUDY CASES (MW)

Service Area	Heavy Winter 2015	Light Winter 2017
Central	1777	1130
Southern	256	162
Valley	1643	1053
Total Receiving Station Load	**3676**	**2345**

Table 16 confirms the expectation that off-peak demand is served primarily from out-of-basin resources acquired through ownership and long-term purchase agreements.

Table 16. GENERATION MIX IN HEAVY AND LIGHT WINTER STUDY CASES (MW)

Resource Type	Capacity	2015 Heavy Winter	2017 Light Winter
Pumped Storage	1247	378	(116)
Natural Gas	3638	610	846
Wind	285	40	40
Solar	649	18	0
Hydroelectric	177	160	50
Internal Generation	***5996***	**1206**	**936**
% Total Generation	*65%*	*35%*	*31%*
Hydroelectric	495	495	495
Wind	304	300	80
Solar	500	0	0
Coal	1569	1092	1092
Nuclear	387	387	387
External Generation	***3355***	**2274**	**2054**
% Total Generation	*35%*	*65%*	*69%*
Total Generation	**9251**	**3480**	**2990**

For the winter conditions studied in 2015, LADWP's transmission facilities are expected to operate within their ratings and within their thermal and voltage for (N-0), (N-1), and (N-2) contingencies. However, for the light winter 2017, high voltage violations would be found at Scattergood 230 kV, Olympic 138 kV, and Hollywood 138 kV under normal conditions. To resolve these violations, a variable 90- MVAR shunt reactor bank would be required at Scattergood 230 kV and a variable 90-MVAR shunt reactor bank at RS-K (Olympic) 230 kV, as it was recommended in the 2012 Reactive Power Study.

Stability. The 2013, 2018, and 2022 heavy summer cases, 2015 heavy winter and 2017 light winter study cases described in this 2012 Assessment were tested for transient and post-transient performance under the (N-1) and (N-2) contingencies described in Appendix G. There were no violations and no stability limitations in these studies. Typical plots from these studies are provided in Appendix I.

Relay Coordination with adjacent Planning Coordinator Areas for 115 kV and 138 kV Facilities (PRC-023-1 R3)

TPL-001, TPL-002 and TPL-003 provide a screen to determine the facilities that are critical to the reliability of the Bulk Electric System. This process, carried out in this 2012 Assessment by LADWP in its role as a Planning Coordinator, has determined that there are no existing or currently planned facilities to report per PRC-023-1 R3: there are no planned or existing qualifying facilities (transmission lines operated at 100 kV to 200 kV and transformers with low voltage terminals connected at 100 kV to 200 kV) in the LADWP Planning Coordinator Area that are critical to the reliability of the Bulk Electric System

Summary of Findings

Note: NERC requires evidence to be placed in the body of the report, not in the Executive Summary. The next three pages repeat information in the Executive Summary.

This 2012 Assessment does not indicate any IROL conditions or any post-contingency stability limits in the next ten years.

Full analyses of all credible outages listed in Appendix F reveals the existing and planned system should be able to sustain every studied contingency except for the following:

(1) A simultaneous (N-2) outage of Rinaldi-Tarzana 230kV Lines 1 & 2 as early as Summer 2013 would overload the terminal equipment on Northridge-Tarzana 230kV Line 1.

(2) A simultaneous (N-2) outage of the Tarzana-Olympic 230kV Line 1 & the Tarzana-Olympic 138kV Line 1 during a summer heat storm would overload Scattergood-Olympic 230kV Line 2 until Scattergood-Olympic 230kV Cable A is placed in service in 2015.

(3) A simultaneous (N-2) outage of Rinaldi-Tarzana 230kV Lines 1 & 2 during a summer heat storm would overload Scattergood-Olympic 230kV Line 2 until Scattergood-Olympic Cable A is placed in service in 2015

(4) A simultaneous (extreme event) outage of three elements consisting of Rinaldi-Tarzana 230kV Lines 1& 2 and Northridge-Tarzana 230 kV Line 1 during a summer heat storm in 2015 would cause local low voltages at RS-U (Tarzana) and RS-T (Canoga)

(5) Under the light winter 2015 conditions, the installation of Scattergood-Olympic Cable A would cause severe high voltage violations at Scattergood, RS-K (Olympic) and RS-H (Hollywood).

(6) Planned solar projects between Inyo substation and Cottonwood tap would cause severe low voltage violations at Cottonwood as early as Summer 2018.

(7) A simultaneous (extreme event) outage of three elements consisting of Toluca-Hollywood 230kV Lines 1& 3 and Toluca-Hollywood 138 kV Line 2 during a summer heat storm in 2018 would cause local low voltage at RS-H (Hollywood).

(8) A single (N-1) outage of Haskell Canyon-Rinaldi 230 kV Line may overload the Haskell Canyon-Sylmar 230 kV Line as early as Summer 2018.

To mitigate these overloads, the following corrective actions are recommended. These measures will satisfy the applicable NERC planning standards for contingency or post-contingency system performance [g] :

(1) During the 2013 Summer Peak, continue using a selective load-shedding program at RS-U (Tarzana) to relieve the overload on the Northridge-Tarzana 230kV Line 1 during a double contingency outage of Rinaldi-Tarzana 230kV Lines 1 & 2. The load-

[g] NERC TPL-002-0b for N-1 (Category B) , NERC TPL-003-0a for N-2 (Category C)

shedding will be needed until the ampacity-limited terminal equipment (circuit breakers and disconnects) on the Northridge-Tarzana 230kV Line 1 are upgraded in 2015.

The following three recommendations all utilize load shedding as an interim measure until the new Scattergood-Olympic 230 kV Cable A is put in-service in June 2015:

(2) Through 2014, implement a selective load-shedding program at RS-K (Olympic) to relieve the overload on Scattergood-Olympic 230kV Line 2 during a double contingency outage of Tarzana-Olympic 230kV Line 1 and the Tarzana-Olympic 138kV Line 1.

(3) Through 2014, implement a selective load-shedding program at RS-U (Tarzana) and RS-K (Olympic) to relieve the overload on Scattergood-Olympic 230kV Line 2 during a double contingency outage of Rinaldi-Tarzana 230kV Lines 1 & 2.

(4) Starting with Summer 2014, implement a selective under-voltage load-shedding program at RS-T to mitigate local low voltages at RS-U (Tarzana) and RS-T (Canoga) for the simultaneous outage of Rinaldi-Tarzana 230kV Lines 1& 2 and Northridge-Tarzana 230 kV Line 1. This triple line outage is considered an extreme event.

(5) Before Winter 2015, resolve the high voltage violations at Scattergood, RS-K (Olympic), and RS-H (Hollywood) by installing one variable 90-MVAR variable shunt reactor bank at Scattergood 230 kV, and one variable 90-MVAR shunt reactor bank at RS-K (Olympic) 230 kV as recommended in the 2012 DWP Reactive Power Study .

(6) Before Summer 2018, resolve the low voltage violation at Cottonwood tap by adding four 25-MVAR capacitor banks with a spare 25-MVAR capacitor bank at the new solar collector substation.

(7) Before Summer 2018, implement direct or under-voltage load-shedding program at RS-H (Hollywood) to mitigate local low voltage at RS-H (Hollywood) for the simultaneous outage of Toluca-Hollywood 230kV Lines 1&3 and Toluca-Hollywood 138 kV Line 2. This triple line outage is considered an extreme event.

(8) Before Summer 2018, resolve overloads on the Haskell Canyon-Sylmar 230 kV Line during a loss of the Haskell Canyon-Rinaldi 230 kV Line 1 by completing the following two system upgrades:

- Relocate the 230/115 kV Banks from Olive Switching Station to Haskell Canyon Switching Station and terminate the 115 kV PPA and PP2 lines at Haskell Canyon

- Convert the existing twin 115 kV circuits between Haskell Canyon Switching Station and Olive Switching Station with a new double 230 kV circuit along the existing 115 kV right-of-way. Extend one wire from Olive Switching Station to Sylmar Switching Station using the vacant position on the existing towers. Terminate the other wire at Olive Switching Station to form Haskell Canyon – Olive Line 2.

Table 17 summarizes the findings and recommendations of the 2012 Assessment.

Table 17. FINDINGS AND RECOMMENDATIONS

Year	Outage(s)	Reliability Category	Overloaded Line or System Violation	Recommendation
Summer Peak 2013 Through Summer Peak 2014	Rinaldi-Tarzana 230kV Lines 1 & 2	C (TPL-003-0a)	Terminal equipment on Northridge-Tarzana 230kV Line 1	Selectively shed load at RS-U (Tarzana) (~ 8 MW) for short term. Upgrade circuit breakers and disconnects to higher rating.
Summer Peak 2013 Through Summer Peak 2015	Tarzana-Olympic 230kV Line 1 & Tarzana-Olympic 138kV Line 1	C (TPL-003-0a)	Scattergood-Olympic 230kV Line 2	Selectively shed load at RS-K (Olympic) (~200 MW) and RS-U (~25 MW) for short term. Add new Scattergood-Olympic 230 kV Cable A for long term.
Summer Peak 2013 Through Summer Peak 2014	Rinaldi-Tarzana 230kV Lines 1& 2	C (TPL-003-0a)	Scattergood-Olympic 230kV Line 2	Selectively shed load at RS-K (Olympic) (~125 MW) Add new Scattergood-Olympic 230 kV Cable A for long term.
Summer Peak 2014 Onward	Rinaldi-Tarzana 230kV Lines 1& 2 and Northridge-Tarzana 230 kV Line 1	D (TPL-004-0)	Local voltage collapse	Suggested under-voltage load shedding program in RS-T (Canoga).
Winter 2015	No Outage	A (TPL-001-0.1)	High voltage violations at Scattergood, Olympic, and Hollywood	Install a variable 90-MVAR shunt reactor bank at Scattergood 230 kV and a variable 90-MVAR shunt reactor bank at RS-K (Olympic) 230 kV
Summer 2018	No Outage	A (TPL-001-0.1)	Low voltage violation at Cottonwood tap due to the addition of the planned solar projects	Install four 25-MVAR capacitor banks with a spare 25 MVAR capacitor bank at the new solar collector substation.
Summer 2018	Toluca-Hollywood 230kV Lines 1& 3 and Toluca-Holywood 138 kV Line 1	D (TPL-004-0)	Local low voltage	Suggested direct or under-voltage load shedding program in RS-H (Holllywood).
Summer Peak 2018	Haskell Canyon-Rinaldi 230 kV Line 1	B (TPL-002-0b)	Haskell Canyon-Sylmar 230 kV Line 1	The following system upgrades are required : • Relocate the 230/115 kV Banks from Olive Switching Station to Haskell Canyon Switching Station. • Convert the existing twin 115 kV circuits between Haskell Canyon Switching Station and Olive Switching Station with a new double 230 kV circuit along existing 115 kV right-of-way. Extend one wire from Olive Switching Station to Sylmar Switching Station using the vacant position on the existing towers to form Haskell Canyon-Sylmar Line 2. Terminate the other wire at Olive Switching Station to form Haskell Canyon – Olive Line 2.

Recommendations

#1. Resolve potential overloads on the terminating equipment on Northridge-Tarzana 230kV Line 1 due to loss of Rinaldi-Tarzana 230kV Lines 1 & 2.

- *Implement a Load Shedding Program in RS-U (Tarzana) when Rinaldi-Tarzana 230kV Lines 1 & 2 are lost.* The problem is resolved once Northridge-Tarzana 230kV Line 1 and its terminal equipment are upgraded to provide additional capacity in 2015. The limiting terminal equipment include 5 Circuit Breakers and 8 disconnects at RS-J and RS-U. In the interim, as much as 8 MW may be shed.

#2. Resolve potential overloads on Scattergood-Olympic 230kV Line 2 due to a loss of Tarzana-Olympic 230kV & 138 kV Lines.

Implement a selective load-shedding program at RS-K (Olympic) and RS-U (Tarzana) to relieve the overload. The problem is resolved upon completion of the new Scattergood-Olympic 230 kV Line 1 in June 2015. In the interim, as much as 200MW at RS-K (Olympic) and 25 MW at RS-U (Tarzana) may be subject to shedding.

#3. As early as Summer 2014, resolve potential overloads on Scattergood-Olympic 230kV Line 2 due to a loss of Rinaldi-Tarzana 230kV Lines 1 & 2.

- *Implement a selective load-shedding program at RS-K (Olympic) to relieve the overload.* The problem is resolved upon completion of the new Scattergood-Olympic 230 kV Line 1 in June 2015. In the interim, as much as 125 MW at RS-U (Olympic) may be subject to shedding.

#4. Implementation of corrective action is not required by TPL-004 but this Assessment provides a recommendation to the Transmission Operator to implement a direct load shedding scheme at RS-T (Canoga) from 2014 onward[h].

#5. Resolve high voltage violations at Scattergood, RS-K (Olympic) and RS-H (Hollywood).

- *Install one variable 90-MVAR shunt reactor bank at Scattergood 230 kV and one variable 90-MVAR shunt reactor banks at RS-K (Olympic) 230 kV.*

This recommendation reaffirmed recommendations of the 2012 Reactive Power Study performed jointly by System Planning and ECC Grid Operations.

#6. Resolve low voltage violation at Cottonwood tap due to the addition of a planned solar project in the area.

- *Install four 25-MVAR capacitor banks with a spare 25 MW capacitor bank at the new solar collector station*

[h] Recommendation 4 in the 2012 Assessment is the same as Recommendation 5 in the 2009 Assessment. The 2009 Assessment evaluated only model year 2014 for this event, and the 2012 Assessment evaluated only model year 2018 for this event; the recommendation from the 2009 Assessment is still valid, so the recommendation indicating the earliest need to act (2014) is kept in the 2012 Assessment.

#7. Implementation of corrective action is not required by TPL-004 but this Assessment provides a recommendation to the Transmission Operator to implement a direct or under-voltage load shedding scheme at RS-H (Hollywood) from 2018 onward.

#8. As early as Summer 2018, resolve potential overloads on Haskell Canyon-Sylmar 230 kV Line 1 during a loss of the Haskell Canyon-Rinaldi 230 kV Line 1.

This recommendation is the same as recommendation #6 in the 2011 Assessment with one addition upgrades:

- *Relocate the 230/115 kV Banks from Olive Switching Station to Haskell Canyon Switching Station and terminate the 115 kV PPA and PP2 lines at Haskell Canyon*

  - *Convert the existing twin 115 kV circuits between Haskell Canyon Switching Station and Olive Switching Station with a new double 230 kV circuit along the existing 115 kV right-of-way. Extend one wire from Olive Switching Station to Sylmar Switching Station using the vacant position on the existing towers. Terminate the other wire at Olive Switching Station to form Haskell Canyon – Olive Line 2*

<u>Implementation Plan for these Recommendations</u>

#1: The budget for the terminal equipment upgrades is already in the system. The Load Shedding Program in RS-U (Tarzana) is an interim solution that be used until the entire project is upgraded.

#2 and #3: The Scattergood-Olympic 230kV Line 1 is budgeted and has an expected in-service date of June 2015. This project is already in the 2012-2013 budget. The Load Shedding Programs at RS-U (Tarzana) and RS-K (Olympic) are interim solutions that will be used until the project is placed in-service.

#4: Implementation of corrective action is not required for this Category D contingency. No budget for direct load shed has been developed.

#5: The budget for the shunt reactors installation has been developed per Power System Engineering's memo dated on August 06, 2012.

#6: This project is beyond the current budget cycle. It is expected to appear in the 2016-2017 budget.

#7: Implementation of corrective action is not required for this Category D contingency. No budget for direct load shed has been developed.

#8: This project is beyond the current budget cycle. It is expected to appear in the 2016-2017 budget.

<u>Comparison with Recommendations in the 2011 Ten-Year Transmission Assessment</u>

Changes to previous recommendations

Recommendation #1: completion of the terminal equipment upgrade is delayed to 2015.

Recommendation #2: the load-shedding is less aggressive: (2011) 200 MW at RS-K plus 90 MW at RS-U to (2012) 200MW at RS-K plus 25 MW at RS-U.

Recommendation #3: the load-shedding is less aggressive: (2011) 200 MW at RS-K plus 90 MW at RS-U to (2012) 125 MW at RS-K and 0 MW at RS-U.

Recommendation #4 matches Recommendation #4 in the 2011 Assessment.

Recommendation #5 is new.

Recommendation #6 matches Recommendation #5 in the 2011 Assessment.

Recommendation #7 is new.

Recommendation #8 has one additional upgrade compared to Recommendation #6 in the 2011 Assessment.

This 2012 Assessment also explores non-TPL conceptual transmission plans which would enhance LADWP's transmission capability beyond the ten-year horizon. Appendix K lists three most cost effective long-term transmission expansion projects with minimum environmental impacts.

For short-term conceptual plan, two sensitivity scenarios, in which the Victorville-to-Los-Angeles-Basin (VIC-LA) transmission system is loaded up to 4014 MW and 4419 MW or 103% and 113% above the existing 2012 summer System Operating Limit, were assessed in the 2018 heavy summer conditions. In these scenarios, several critical (N-1) and (N-2) contingencies would likely overload a number of VIC-LA system components. However, no recommendations are made at this time, since the studied scenarios are highly conceptual. Appendix L summarizes results of these stressed VIC-LA scenarios.

Appendix A. NERC/WECC Planning Standards

A. Introduction

1. **Title:** System Performance Under Normal (No Contingency) Conditions (Category A)
2. **Number:** TPL-001-0.1
3. **Purpose:** System simulations and associated assessments are needed periodically to ensure that reliable systems are developed that meet specified performance requirements with sufficient lead time, and continue to be modified or upgraded as necessary to meet present and future system needs.
4. **Applicability:**
   - **4.1.** Planning Authority
   - **4.2.** Transmission Planner
5. **Effective Date:** May 13, 2009

B. Requirements

R1. The Planning Authority and Transmission Planner shall each demonstrate through a valid assessment that its portion of the interconnected transmission system is planned such that, with all transmission facilities in service and with normal (pre-contingency) operating procedures in effect, the Network can be operated to supply projected customer demands and projected Firm (non- recallable reserved) Transmission Services at all Demand levels over the range of forecast system demands, under the conditions defined in Category A of Table I. To be considered valid, the Planning Authority and Transmission Planner assessments shall:

- **R1.1.** Be made annually.
- **R1.2.** Be conducted for near-term (years one through five) and longer-term (years six through ten) planning horizons.
- **R1.3.** Be supported by a current or past study and/or system simulation testing that addresses each of the following categories, showing system performance following Category A of Table 1 (no contingencies). The specific elements selected (from each of the following categories) shall be acceptable to the associated Regional Reliability Organization(s).
  - **R1.3.1.** Cover critical system conditions and study years as deemed appropriate by the entity performing the study.
  - **R1.3.2.** Be conducted annually unless changes to system conditions do not warrant such analyses.
  - **R1.3.3.** Be conducted beyond the five-year horizon only as needed to address identified marginal conditions that may have longer lead-time solutions.
  - **R1.3.4.** Have established normal (pre-contingency) operating procedures in place.
  - **R1.3.5.** Have all projected firm transfers modeled.

R1.3.6. Be performed for selected demand levels over the range of forecast system demands.

R1.3.7. Demonstrate that system performance meets Table 1 for Category A (no contingencies).

R1.3.8. Include existing and planned facilities.

R1.3.9. Include Reactive Power resources to ensure that adequate reactive resources are available to meet system performance.

R1.4. Address any planned upgrades needed to meet the performance requirements of Category A.

R2. When system simulations indicate an inability of the systems to respond as prescribed in Reliability Standard TPL-001-0_R1, the Planning Authority and Transmission Planner shall each:

R2.1. Provide a written summary of its plans to achieve the required system performance as described above throughout the planning horizon.

R2.1.1. Including a schedule for implementation.

R2.1.2. Including a discussion of expected required in-service dates of facilities.

R2.1.3. Consider lead times necessary to implement plans.

R2.2. Review, in subsequent annual assessments, (where sufficient lead time exists), the continuing need for identified system facilities. Detailed implementation plans are not needed.

R3. The Planning Authority and Transmission Planner shall each document the results of these reliability assessments and corrective plans and shall annually provide these to its respective NERC Regional Reliability Organization(s), as required by the Regional Reliability Organization.

C. Measures

M1. The Planning Authority and Transmission Planner shall have a valid assessment and corrective plans as specified in Reliability Standard TPL-001-0_R1 and TPL-001-0_R2.

M2. The Planning Authority and Transmission Planner shall have evidence it reported documentation of results of its Reliability Assessments and corrective plans per Reliability Standard TPL-001-0_R3.

D. Compliance

1. Compliance Monitoring Process

1.1. Compliance Monitoring Responsibility

Compliance Monitor: Regional Reliability Organization.
Each Compliance Monitor shall report compliance and violations to NERC via the NERC Compliance Reporting Process.

1.2. Compliance Monitoring Period and Reset Time Frame

Annually

1.3. Data Retention
None specified.

1.4. Additional Compliance Information

2. Levels of Non-Compliance

2.1. Level 1: Not applicable.

2.2. Level 2: A valid assessment and corrective plan for the longer-term planning horizon is not available.

2.3. Level 3: Not applicable.

2.4. Level 4: A valid assessment and corrective plan for the near-term planning horizon is not available.

E. Regional Differences

1. None identified.

Version History

Version	Date	Action	Change Tracking
0	April 1, 2005	Effective Date	New
0	February 8, 2005	BOT Approval	Revised
0	June 3, 2005	Fixed reference in M1 to read TPL-001-0 R2.1 and TPL-001-0 R2.2	Errata
0	July 24, 2007	Corrected reference in M1. to read TPL-001-0 R1 and TPL-001-0 R2.	Errata
0.1	October 29, 2008	BOT adopted errata changes; updated version number to “0.1”	Errata
0.1	May 13, 2009	FERC Approved – Updated Effective Date and Footer	Revised

Table I. Transmission System Standards – Normal and Emergency Conditions

Category	Contingencies	System Limits or Impacts		
	Initiating Event(s) and Contingency Element(s)	System Stable and both Thermal and Voltage Limits within Applicable Rating [a]	Loss of Demand or Curtailed Firm Transfers	Cascading Outages
A No Contingencies	All Facilities in Service	Yes	No	No
B Event resulting in the loss of a single element.	Single Line Ground (SLG) or 3-Phase (3Ø) Fault, with Normal Clearing: 1. Generator 2. Transmission Circuit 3. Transformer Loss of an Element without a Fault	Yes Yes Yes Yes	No [b] No [b] No [b] No [b]	No No No No
	Single Pole Block, Normal Clearing[e]: 4. Single Pole (dc) Line	Yes	No[b]	No
C Event(s) resulting in the loss of two or more (multiple) elements.	SLG Fault, with Normal Clearing[e]: 1. Bus Section 2. Breaker (failure or internal Fault)	Yes Yes	Planned/ Controlled[c] Planned/ Controlled[c]	No No
	SLG or 3Ø Fault, with Normal Clearing[e], Manual System Adjustments, followed by another SLG or 3Ø Fault, with Normal Clearing[e]: 3. Category B (B1, B2, B3, or B4) contingency, manual system adjustments, followed by another Category B (B1, B2, B3, or B4) contingency	Yes	Planned/ Controlled[c]	No
	Bipolar Block, with Normal Clearing[e]: 4. Bipolar (dc) Line Fault (non 3Ø), with Normal Clearing[e]: 5. Any two circuits of a multiple circuit towerline[f]	Yes Yes	Planned/ Controlled[c] Planned/ Controlled[c]	No No
	SLG Fault, with Delayed Clearing[e] (stuck breaker or protection system failure): 6. Generator 7. Transformer 8. Transmission Circuit 9. Bus Section	Yes Yes Yes Yes	Planned/ Controlled[c] Planned/ Controlled[c] Planned/ Controlled[c] Planned/ Controlled[c]	No No No No

D [d] Extreme event resulting in two or more (multiple) elements removed or Cascading out of service.	3Ø Fault, with Delayed Clearing [e] (stuck breaker or protection system failure): 1. Generator 2. Transmission Circuit 3. Transformer 4. Bus Section 3Ø Fault, with Normal Clearing [e]: 5. Breaker (failure or internal Fault) 6. Loss of towerline with three or more circuits 7. All transmission lines on a common right-of way 8. Loss of a substation (one voltage level plus transformers) 9. Loss of a switching station (one voltage level plus transformers) 10. Loss of all generating units at a station 11. Loss of a large Load or major Load center 12. Failure of a fully redundant Special Protection System (or remedial action scheme) to operate when required 13. Operation, partial operation, or misoperation of a fully redundant Special Protection System (or Remedial Action Scheme) in response to an event or abnormal system condition for which it was not intended to operate 14. Impact of severe power swings or oscillations from Disturbances in another Regional Reliability Organization.	Evaluate for risks and consequences. ▪ May involve substantial loss of customer Demand and generation in a widespread area or areas. ▪ Portions or all of the interconnected systems may or may not achieve a new, stable operating point. ▪ Evaluation of these events may require joint studies with neighboring systems.

a) Applicable rating refers to the applicable Normal and Emergency facility thermal Rating or system voltage limit as determined and consistently applied by the system or facility owner. Applicable Ratings may include Emergency Ratings applicable for short durations as required to permit operating steps necessary to maintain system control. All Ratings must be established consistent with applicable NERC Reliability Standards addressing Facility Ratings.

b) Planned or controlled interruption of electric supply to radial customers or some local Network customers, connected to or supplied by the Faulted element or by the affected area, may occur in certain areas without impacting the overall reliability of the interconnected transmission systems. To prepare for the next contingency, system adjustments are permitted, including curtailments of contracted Firm (non-recallable reserved) electric power Transfers.

c) Depending on system design and expected system impacts, the controlled interruption of electric supply to customers (load shedding), the planned removal from service of certain generators, and/or the curtailment of contracted Firm (non-recallable reserved) electric power Transfers may be necessary to maintain the overall reliability of the interconnected transmission systems.

d) A number of extreme contingencies that are listed under Category D and judged to be critical by the transmission planning entity(ies) will be selected for evaluation. It is not expected that all possible facility outages under each listed contingency of Category D will be evaluated.

e) Normal clearing is when the protection system operates as designed and the Fault is cleared in the time normally expected with proper functioning of the installed protection systems. Delayed clearing of a Fault is due to failure of any protection system component such as a relay, circuit breaker, or current transformer, and not because of an intentional design delay.

f) System assessments may exclude these events where multiple circuit towers are used over short distances (e.g., station entrance, river crossings) in accordance with Regional exemption criteria.

A. Introduction

1. Title: **System Performance Following Loss of a Single Bulk Electric System Element (Category B)**

2. Number: TPL-002-0b

3. Purpose: System simulations and associated assessments are needed periodically to ensure that reliable systems are developed that meet specified performance requirements with sufficient lead time, and continue to be modified or upgraded as necessary to meet present and future system needs.

4. Applicability:

4.1. Planning Authority

4.2. Transmission Planner

5. Effective Date: Immediately after approval of applicable regulatory authorities.

B. Requirements

R1. The Planning Authority and Transmission Planner shall each demonstrate through a valid assessment that its portion of the interconnected transmission system is planned such that the Network can be operated to supply projected customer demands and projected Firm (non-recallable reserved) Transmission Services, at all demand levels over the range of forecast system demands, under the contingency conditions as defined in Category B of Table I. To be valid, the Planning Authority and Transmission Planner assessments shall:

R1.1. Be made annually.

R1.2. Be conducted for near-term (years one through five) and longer-term (years six through ten) planning horizons.

R1.3. Be supported by a current or past study and/or system simulation testing that addresses each of the following categories,, showing system performance following Category B of Table 1 (single contingencies). The specific elements selected (from each of the following categories) for inclusion in these studies and simulations shall be acceptable to the associated Regional Reliability Organization(s).

R1.3.1. Be performed and evaluated only for those Category B contingencies that would produce the more severe System results or impacts. The rationale for the contingencies selected for evaluation shall be available as supporting information. An explanation of why the remaining simulations would produce less severe system results shall be available as supporting information.

R1.3.2. Cover critical system conditions and study years as deemed appropriate by the responsible entity.

R1.3.3. Be conducted annually unless changes to system conditions do not warrant such analyses.

R1.3.4. Be conducted beyond the five-year horizon only as needed to address identified marginal conditions that may have longer lead-time solutions.

R1.3.5. Have all projected firm transfers modeled.

R1.3.6. Be performed and evaluated for selected demand levels over the range of forecast system Demands.

R1.3.7. Demonstrate that system performance meets Category B contingencies.

R1.3.8. Include existing and planned facilities.

R1.3.9. Include Reactive Power resources to ensure that adequate reactive resources are available to meet system performance.

R1.3.10. Include the effects of existing and planned protection systems, including any backup or redundant systems.

R1.3.11. Include the effects of existing and planned control devices.

R1.3.12. Include the planned (including maintenance) outage of any bulk electric equipment (including protection systems or their components) at those demand levels for which planned (including maintenance) outages are performed.

R1.4. Address any planned upgrades needed to meet the performance requirements of Category B of Table I.

R1.5. Consider all contingencies applicable to Category B.

R2. When System simulations indicate an inability of the systems to respond as prescribed in Reliability Standard TPL-002-0_R1, the Planning Authority and Transmission Planner shall each:

R2.1. Provide a written summary of its plans to achieve the required system performance as described above throughout the planning horizon:

R2.1.1. Including a schedule for implementation.

R2.1.2. Including a discussion of expected required in-service dates of facilities.

R2.1.3. Consider lead times necessary to implement plans.

R2.2. Review, in subsequent annual assessments, (where sufficient lead time exists), the continuing need for identified system facilities. Detailed implementation plans are not needed.

R3. The Planning Authority and Transmission Planner shall each document the results of its Reliability Assessments and corrective plans and shall annually provide the results to its respective Regional Reliability Organization(s), as required by the Regional Reliability Organization.

C. Measures

M1. The Planning Authority and Transmission Planner shall have a valid assessment and corrective plans as specified in Reliability Standard TPL-002-0_R1 and TPL-002-0_R2.

M2. The Planning Authority and Transmission Planner shall have evidence it reported documentation of results of its reliability assessments and corrective plans per Reliability Standard TPL-002-0_R3.

D. Compliance

1. Compliance Monitoring Process

1.1. Compliance Monitoring Responsibility

Compliance Monitor: Regional Reliability Organizations.
Each Compliance Monitor shall report compliance and violations to NERC via the NERC Compliance Reporting Process.

1.2. Compliance Monitoring Period and Reset Timeframe

Annually.

1.3. Data Retention

None specified.

1.4. Additional Compliance Information

None.

2. Levels of Non-Compliance

2.1. Level 1: Not applicable.

2.2. Level 2: A valid assessment and corrective plan for the longer-term planning horizon is not available.

2.3. Level 3: Not applicable.

2.4. Level 4: A valid assessment and corrective plan for the near-term planning horizon is not available.

E. Regional Differences

1. None identified.

Version History

Version	Date	Action	Change Tracking
0	April 1, 2005	Effective Date	New
0a	October 23, 2008	Added Appendix 1 – Interpretation of TPL-002-0 Requirements R1.3.2 and R1.3.12 and TPL-003-0 Requirements R1.3.2 and R1.3.12 for Ameren and MISO	Revised
0b	November 5, 2009	Added Appendix 2 – Interpretation of R1.3.10 approved by BOT on November 5, 2009	Addition

Table I. Transmission System Standards — Normal and Emergency Conditions

Category	Contingencies	System Limits or Impacts		
	Initiating Event(s) and Contingency Element(s)	System Stable and both Thermal and Voltage Limits within Applicable Rating [a]	Loss of Demand or Curtailed Firm Transfers	Cascading Outages
A No Contingencies	All Facilities in Service	Yes	No	No
B Event resulting in the loss of a single element.	Single Line Ground (SLG) or 3-Phase (3Ø) Fault, with Normal Clearing: 1. Generator 2. Transmission Circuit 3. Transformer Loss of an Element without a Fault.	Yes Yes Yes Yes	No [b] No [b] No [b] No [b]	No No No No
	Single Pole Block, Normal Clearing[e]: 4. Single Pole (dc) Line	Yes	No[b]	No
C Event(s) resulting in the loss of two or more (multiple) elements.	SLG Fault, with Normal Clearing[e]: 1. Bus Section 2. Breaker (failure or internal Fault)	Yes Yes	Planned/ Controlled[c] Planned/ Controlled[c]	No No
	SLG or 3Ø Fault, with Normal Clearing[e], Manual System Adjustments, followed by another SLG or 3Ø Fault, with Normal Clearing[e]: 3. Category B (B1, B2, B3, or B4) contingency, manual system adjustments, followed by another Category B (B1, B2, B3, or B4) contingency	Yes	Planned/ Controlled[c]	No
	Bipolar Block, with Normal Clearing[e]: 4. Bipolar (dc) Line Fault (non 3Ø), with Normal Clearing[e]: 5. Any two circuits of a multiple circuit towerline[f]	Yes Yes	Planned/ Controlled[c] Planned/ Controlled[c]	No No
	SLG Fault, with Delayed Clearing[e] (stuck breaker or protection system failure): 6. Generator 7. Transformer 8. Transmission Circuit 9. Bus Section	Yes Yes Yes Yes	Planned/ Controlled[c] Planned/ Controlled[c] Planned/ Controlled[c] Planned/ Controlled[c]	No No No No

D [d] Extreme event resulting in two or more (multiple) elements removed or Cascading out of service	3Ø Fault, with Delayed Clearing[e] (stuck breaker or protection system failure): 1. Generator 2. Transmission Circuit 3. Transformer 4. Bus Section 3Ø Fault, with Normal Clearing[e]: 5. Breaker (failure or internal Fault) 6. Loss of towerline with three or more circuits 7. All transmission lines on a common right-of way 8. Loss of a substation (one voltage level plus transformers) 9. Loss of a switching station (one voltage level plus transformers) 10. Loss of all generating units at a station 11. Loss of a large Load or major Load center 12. Failure of a fully redundant Special Protection System (or remedial action scheme) to operate when required 13. Operation, partial operation, or misoperation of a fully redundant Special Protection System (or Remedial Action Scheme) in response to an event or abnormal system condition for which it was not intended to operate 14. Impact of severe power swings or oscillations from Disturbances in another Regional Reliability Organization.	Evaluate for risks and consequences. ▪ May involve substantial loss of customer Demand and generation in a widespread area or areas. ▪ Portions or all of the interconnected systems may or may not achieve a new, stable operating point. ▪ Evaluation of these events may require joint studies with neighboring systems.

a) Applicable rating refers to the applicable Normal and Emergency facility thermal Rating or system voltage limit as determined and consistently applied by the system or facility owner. Applicable Ratings may include Emergency Ratings applicable for short durations as required to permit operating steps necessary to maintain system control. All Ratings must be established consistent with applicable NERC Reliability Standards addressing Facility Ratings.

b) Planned or controlled interruption of electric supply to radial customers or some local Network customers, connected to or supplied by the Faulted element or by the affected area, may occur in certain areas without impacting the overall reliability of the interconnected transmission systems. To prepare for the next contingency, system adjustments are permitted, including curtailments of contracted Firm (non-recallable reserved) electric power Transfers.

c) Depending on system design and expected system impacts, the controlled interruption of electric supply to customers (load shedding), the planned removal from service of certain generators, and/or the curtailment of contracted Firm (non-recallable reserved) electric power Transfers may be necessary to maintain the overall reliability of the interconnected transmission systems.

d) A number of extreme contingencies that are listed under Category D and judged to be critical by the transmission planning entity(ies) will be selected for evaluation. It is not expected that all possible facility outages under each listed contingency of Category D will be evaluated.

e) Normal clearing is when the protection system operates as designed and the Fault is cleared in the time normally expected with proper functioning of the installed protection systems. Delayed clearing of a Fault is due to failure of any protection system component such as a relay, circuit breaker, or current transformer, and not because of an intentional design delay.

f) System assessments may exclude these events where multiple circuit towers are used over short distances (e.g., station entrance, river crossings) in accordance with Regional exemption criteria.

Appendix 1

Interpretation of TPL-002-0 Requirements R1.3.2 and R1.3.12 and TPL-003-0 Requirements R1.3.2 and R1.3.12 for Ameren and MISO

NERC received two requests for interpretation of identical requirements (Requirements R1.3.2 and R1.3.12) in TPL-002-0 and TPL-003-0 from the Midwest ISO and Ameren. These requirements state:

TPL-002-0:

[To be valid, the Planning Authority and Transmission Planner assessments shall:]

R1.3 Be supported by a current or past study and/or system simulation testing that addresses each of the following categories, showing system performance following Category B of Table 1 (single contingencies). The specific elements selected (from each of the following categories) for inclusion in these studies and simulations shall be acceptable to the associated Regional Reliability Organization(s).

R1.3.2 Cover critical system conditions and study years as deemed appropriate by the responsible entity.

R1.3.12 Include the planned (including maintenance) outage of any bulk electric equipment (including protection systems or their components) at those demand levels for which planned (including maintenance) outages are performed.

TPL-003-0:

[To be valid, the Planning Authority and Transmission Planner assessments shall:]

R1.3 Be supported by a current or past study and/or system simulation testing that addresses each of the following categories, showing system performance following Category C of Table 1 (multiple contingencies). The specific elements selected (from each of the following categories) for inclusion in these studies and simulations shall be acceptable to the associated Regional Reliability Organization(s).

R1.3.2 Cover critical system conditions and study years as deemed appropriate by the responsible entity.

R1.3.12 Include the planned (including maintenance) outage of any bulk electric equipment (including protection systems or their components) at those demand levels for which planned (including maintenance) outages are performed.

Requirement R1.3.2

Request for Interpretation of TPL-002-0 and TPL-003-0 Requirement R1.3.2 Received from Ameren on July 25, 2007:

Ameren specifically requests clarification on the phrase, 'critical system conditions' in R1.3.2. Ameren asks if compliance with R1.3.2 requires multiple contingent generating unit Outages as part of possible generation dispatch scenarios describing critical system conditions for which the system shall be planned and modeled in accordance with the contingency definitions included in Table 1.

Request for Interpretation of TPL-002-0 and TPL-003-0 Requirement R1.3.2 Received from MISO on August 9, 2007:

MISO asks if the TPL standards require that any specific dispatch be applied, other than one that is representative of supply of firm demand and transmission service commitments, in the modeling of system contingencies specified in Table 1 in the TPL standards.

MISO then asks if a variety of possible dispatch patterns should be included in planning analyses including a probabilistically based dispatch that is representative of generation deficiency scenarios, would it be an appropriate application of the TPL standard to apply the transmission contingency conditions in Category B of Table 1 to these possible dispatch pattern.

The following interpretation of TPL-002-0 and TPL-003-0 Requirement R1.3.2 was developed by the NERC Planning Committee on March 13, 2008:

The selection of a credible generation dispatch for the modeling of critical system conditions is within the discretion of the Planning Authority. The Planning Authority was renamed "Planning Coordinator" (PC) in the Functional Model dated February 13, 2007. (TPL -002 and -003 use the former "Planning Authority" name, and the Functional Model terminology was a change in name only and did not affect responsibilities.)

– Under the Functional Model, the Planning Coordinator "Provides and informs Resource Planners, Transmission Planners, and adjacent Planning Coordinators of the methodologies and tools for the simulation of the transmission system" while the Transmission Planner "Receives from the Planning Coordinator methodologies and tools for the analysis and development of transmission expansion plans." A PC's selection of "critical system conditions" and its associated generation dispatch falls within the purview of "methodology."

Furthermore, consistent with this interpretation, a Planning Coordinator would formulate critical system conditions that may involve a range of critical generator unit outages as part of the possible generator dispatch scenarios.

Both TPL-002-0 and TPL-003-0 have a similar measure M1:

> **M1.** The Planning Authority and Transmission Planner shall have a valid assessment and corrective plans as specified in Reliability Standard TPL-002-0_R1 [or TPL-003-0_R1] and TPL-002-0_R2 [or TPL-003-0_R2]."

The Regional Reliability Organization (RRO) is named as the Compliance Monitor in both standards. Pursuant to Federal Energy Regulatory Commission (FERC) Order 693, FERC eliminated the RRO as the appropriate Compliance Monitor for standards and replaced it with the Regional Entity (RE). See paragraph 157 of Order 693. Although the referenced TPL standards still include the reference to the RRO, to be consistent with Order 693, the RRO is replaced by the RE as the Compliance Monitor for this interpretation. As the Compliance Monitor, the RE determines what a "valid assessment" means when evaluating studies based upon specific sub-requirements in R1.3 selected by the Planning Coordinator and the Transmission Planner. If a PC has Transmission Planners in more than one region, the REs must coordinate among themselves on compliance matters.

Requirement R1.3.12

Request for Interpretation of TPL-002-0 and TPL-003-0 Requirement R1.3.12 Received from Ameren on July 25, 2007:

Ameren also asks how the inclusion of planned outages should be interpreted with respect to the contingency definitions specified in Table 1 for Categories B and C. Specifically, Ameren asks if R1.3.12 requires that the system be planned to be operated during those conditions associated with planned outages consistent with the performance requirements described in Table 1 plus any unidentified outage.

Request for Interpretation of TPL-002-0 and TPL-003-0 Requirement R1.3.12 Received from MISO on August 9, 2007:

MISO asks if the term "planned outages" means only already known/scheduled planned outages that may continue into the planning horizon, or does it include potential planned outages not yet scheduled that may occur at those demand levels for which planned (including maintenance) outages are performed?

If the requirement does include not yet scheduled but potential planned outages that could occur in the planning horizon, is the following a proper interpretation of this provision?

The system is adequately planned and in accordance with the standard if, in order for a system operator to potentially schedule such a planned outage on the future planned system, planning studies show that a system adjustment (load shed, re-dispatch of generating units in the interconnection, or system reconfiguration) would be required concurrent with taking such a planned outage in order to prepare for a Category B contingency (single element forced out of service)? In other words, should the system in effect be planned to be operated as for a Category C3 n-2 event, even though the first event is a planned base condition?

If the requirement is intended to mean only known and scheduled planned outages that will occur or may continue into the planning horizon, is this interpretation consistent with the original interpretation by NERC of the standard as provided by NERC in response to industry questions in the Phase I development of this standard1?

The following interpretation of TPL-002-0 and TPL-003-0 Requirement R1.3.12 was developed by the NERC Planning Committee on March 13, 2008:

This provision was not previously interpreted by NERC since its approval by FERC and other regulatory authorities. TPL-002-0 and TPL-003-0 explicitly provide that the inclusion of planned (including maintenance) outages of any bulk electric equipment at demand levels for which the planned outages are required. For studies that include planned outages, compliance with the contingency assessment for TPL-002-0 and TPL-003-0 as outlined in Table 1 would include any necessary system adjustments which might be required to accommodate planned outages since a planned outage is not a "contingency" as defined in the *NERC Glossary of Terms Used in Standards.*

Appendix 2

Requirement Number and Text of Requirement
R1.3. Be supported by a current or past study and/or system simulation testing that addresses each of the following categories, showing system performance following **Category B of Table 1** (single contingencies). The specific elements selected (from each of the following categories) for inclusion in these studies and simulations shall be acceptable to the associated Regional Reliability Organization(s). **R1.3.10.** Include the effects of existing and planned protection systems, including any backup or redundant systems.
Background Information for Interpretation
Requirement R1.3 and sub-requirement R1.3.10 of standard TPL-002-0a contain three key obligations: 1. That the assessment is supported by "study and/or system simulation testing that addresses each the following categories, showing system performance following Category B of Table 1 (single contingencies)." 2. "…these studies and simulations shall be acceptable to the associated Regional Reliability Organization(s)." 3. "Include the effects of existing and planned protection systems, including any backup or redundant systems." *Category B of Table 1 (single Contingencies) specifies:* Single Line Ground (SLG) or 3-Phase (3Ø) Fault, with Normal Clearing: 1. Generator 2. Transmission Circuit 3. Transformer Loss of an Element without a Fault. Single Pole Block, Normal Clearing[e]: 4. Single Pole (dc) Line *Note e specifies*: e) Normal Clearing is when the protection system operates as designed and the Fault is cleared in the time normally expected with proper functioning of the installed protection systems. Delayed clearing of a Fault is due to failure of any protection system component such as a relay, circuit breaker, or current transformer, and not because of an intentional design delay. The NERC Glossary of Terms defines Normal Clearing as "A protection system operates as designed and the fault is cleared in the time normally expected with proper functioning of the installed protection systems."
Conclusion
TPL-002-0a requires that System studies or simulations be made to assess the impact of single Contingency operation with Normal Clearing. TPL-002-0a R1.3.10 does require that all elements expected to be removed from service through normal operations of the Protection Systems be removed in simulations. This standard does not require an assessment of the Transmission System performance due to a Protection System failure or Protection System misoperation. Protection System failure or Protection System misoperation is addressed in TPL-003-0 — System Performance following Loss of Two or More Bulk

Electric System Elements (Category C) and TPL-004-0 — System Performance Following Extreme Events Resulting in the Loss of Two or More Bulk Electric System Elements (Category D).

TPL-002-0a R1.3.10 does not require simulating anything other than Normal Clearing when assessing the impact of a Single Line Ground (SLG) or 3-Phase (3Ø) Fault on the performance of the Transmission System.

In regards to PacifiCorp's comments on the material impact associated with this interpretation, the interpretation team has the following comment:

Requirement R2.1 requires "a written summary of plans to achieve the required system performance," including a schedule for implementation and an expected in-service date that considers lead times necessary to implement the plan. Failure to provide such summary may lead to noncompliance that could result in penalties and sanctions.

A. Introduction

1. Title: **System Performance Following Loss of Two or More Bulk Electric System Elements (Category C)**

2. Number: TPL-003-0a

3. Purpose: System simulations and associated assessments are needed periodically to ensure that reliable systems are developed that meet specified performance requirements, with sufficient lead time and continue to be modified or upgraded as necessary to meet present and future System needs.

4. Applicability:

4.1. Planning Authority

4.2. Transmission Planner

5. Effective Date: April 23, 2010

B. Requirements

R1. The Planning Authority and Transmission Planner shall each demonstrate through a valid assessment that its portion of the interconnected transmission systems is planned such that the network can be operated to supply projected customer demands and projected Firm (non-recallable reserved) Transmission Services, at all demand Levels over the range of forecast system demands, under the contingency conditions as defined in Category C of Table I (attached). The controlled interruption of customer Demand, the planned removal of generators, or the Curtailment of firm (non-recallable reserved) power transfers may be necessary to meet this standard. To be valid, the Planning Authority and Transmission Planner assessments shall:

R1.1. Be made annually.

R1.2. Be conducted for near-term (years one through five) and longer-term (years six through ten) planning horizons.

R1.3. Be supported by a current or past study and/or system simulation testing that addresses each of the following categories, showing system performance following Category C of Table 1 (multiple contingencies). The specific elements selected (from each of the following categories) for inclusion in these studies and simulations shall be acceptable to the associated Regional Reliability Organization(s).

R1.3.1. Be performed and evaluated only for those Category C contingencies that would produce the more severe system results or impacts. The rationale for the contingencies selected for evaluation shall be available as supporting information. An explanation of why the remaining simulations would produce less severe system results shall be available as supporting information.

R1.3.2. Cover critical system conditions and study years as deemed appropriate by the responsible entity.

R1.3.3. Be conducted annually unless changes to system conditions do not warrant such analyses.

R1.3.4. Be conducted beyond the five-year horizon only as needed to address identified marginal conditions that may have longer lead-time solutions.

R1.3.5. Have all projected firm transfers modeled.

R1.3.6. Be performed and evaluated for selected demand levels over the range of forecast system demands.

R1.3.7. Demonstrate that System performance meets Table 1 for Category C contingencies.

R1.3.8. Include existing and planned facilities.

R1.3.9. Include Reactive Power resources to ensure that adequate reactive resources are available to meet System performance.

R1.3.10. Include the effects of existing and planned protection systems, including any backup or redundant systems.

R1.3.11. Include the effects of existing and planned control devices.

R1.3.12. Include the planned (including maintenance) outage of any bulk electric equipment (including protection systems or their components) at those Demand levels for which planned (including maintenance) outages are performed.

R1.4. Address any planned upgrades needed to meet the performance requirements of Category C.

R1.5. Consider all contingencies applicable to Category C.

R2. When system simulations indicate an inability of the systems to respond as prescribed in Reliability Standard TPL-003-0_R1, the Planning Authority and Transmission Planner shall each:

R2.1. Provide a written summary of its plans to achieve the required system performance as described above throughout the planning horizon:

R2.1.1. Including a schedule for implementation.

R2.1.2. Including a discussion of expected required in-service dates of facilities.

R2.1.3. Consider lead times necessary to implement plans.

R2.2. Review, in subsequent annual assessments, (where sufficient lead time exists), the continuing need for identified system facilities. Detailed implementation plans are not needed.

R3. The Planning Authority and Transmission Planner shall each document the results of these Reliability Assessments and corrective plans and shall annually provide these to its respective NERC Regional Reliability Organization(s), as required by the Regional Reliability Organization.

C. Measures

M1. The Planning Authority and Transmission Planner shall have a valid assessment and corrective plans as specified in Reliability Standard TPL-003-0_R1 and TPL-003-0_R2.

M2. The Planning Authority and Transmission Planner shall have evidence it reported documentation of results of its reliability assessments and corrective plans per Reliability Standard TPL-003-0_R3.

D. Compliance

1. Compliance Monitoring Process

1.1. Compliance Monitoring Responsibility

Compliance Monitor: Regional Reliability Organizations.

1.2. Compliance Monitoring Period and Reset Timeframe

Annually.

1.3. Data Retention

None specified.

1.4. Additional Compliance Information

None.

2. Levels of Non-Compliance

2.1. Level 1: Not applicable.

2.2. Level 2: A valid assessment and corrective plan for the longer-term planning horizon is not available.

2.3. Level 3: Not applicable.

2.4. Level 4: A valid assessment and corrective plan for the near-term planning horizon is not available.

E. Regional Differences

1. None identified.

Version History

Version	Date	Action	Change Tracking
0	April 1, 2005	Effective Date	New
0	April 1, 2005	Add parenthesis to item “e” on page 8.	Errata
0a	October 23, 2008	Added Appendix 1 – Interpretation of TPL-002-0 Requirements R1.3.2 and R1.3.12 and TPL-003-0 Requirements R1.3.2 and R1.3.12 for Ameren and MISO	Revised
0a	April 23, 2010	FERC approval of interpretation of TPL-003-0 R1.3.12	Interpretation

Table I. Transmission System Standards – Normal and Emergency Conditions

Category	Contingencies	System Limits or Impacts		
	Initiating Event(s) and Contingency Element(s)	System Stable and both Thermal and Voltage Limits within Applicable Rating [a]	Loss of Demand or Curtailed Firm Transfers	Cascading [c] Outages
A No Contingencies	All Facilities in Service	Yes	No	No
B Event resulting in the loss of a single element.	Single Line Ground (SLG) or 3-Phase (3Ø) Fault, with Normal Clearing: 1. Generator 2. Transmission Circuit 3. Transformer Loss of an Element without a Fault.	Yes Yes Yes Yes	No [b] No [b] No [b] No [b]	No No No No
	Single Pole Block, Normal Clearing[e]: 4. Single Pole (dc) Line	Yes	No[b]	No
C Event(s) resulting in the loss of two or more (multiple) elements.	SLG Fault, with Normal Clearing[e]: 1. Bus Section 2. Breaker (failure or internal Fault)	Yes Yes	Planned/ Controlled[c] Planned/ Controlled[c]	No No
	SLG or 3Ø Fault, with Normal Clearing[e], Manual System Adjustments, followed by another SLG or 3Ø Fault, with Normal Clearing[e]: 3. Category B (B1, B2, B3, or B4) contingency, manual system adjustments, followed by another Category B (B1, B2, B3, or B4) contingency	Yes	Planned/ Controlled[c]	No
	Bipolar Block, with Normal Clearing[e]: 4. Bipolar (dc) Line Fault (non 3Ø), with Normal Clearing[e]: 5. Any two circuits of a multiple circuit towerline[f]	Yes Yes	Planned/ Controlled[c] Planned/ Controlled[c]	No No
	SLG Fault, with Delayed Clearing[e] (stuck breaker or protection system failure): 6. Generator 7. Transformer 8. Transmission Circuit 9. Bus Section	Yes Yes Yes Yes	Planned/ Controlled[c] Planned/ Controlled[c] Planned/ Controlled[c] Planned/ Controlled[c]	No No No No

D [d] Extreme event resulting in two or more (multiple) elements removed or Cascading out of service	3Ø Fault, with Delayed Clearing [e] (stuck breaker or protection system failure): 1. Generator 2. Transmission Circuit 3. Transformer 4. Bus Section 3Ø Fault, with Normal Clearing[e]: 5. Breaker (failure or internal Fault) 6. Loss of towerline with three or more circuits 7. All transmission lines on a common right-of way 8. Loss of a substation (one voltage level plus transformers) 9. Loss of a switching station (one voltage level plus transformers) 10. Loss of all generating units at a station 11. Loss of a large Load or major Load center 12. Failure of a fully redundant Special Protection System (or remedial action scheme) to operate when required 13. Operation, partial operation, or misoperation of a fully redundant Special Protection System (or Remedial Action Scheme) in response to an event or abnormal system condition for which it was not intended to operate 14. Impact of severe power swings or oscillations from Disturbances in another Regional Reliability Organization.	Evaluate for risks and consequences. ▪ May involve substantial loss of customer Demand and generation in a widespread area or areas. ▪ Portions or all of the interconnected systems may or may not achieve a new, stable operating point. ▪ Evaluation of these events may require joint studies with neighboring systems.

a) Applicable rating refers to the applicable Normal and Emergency facility thermal Rating or system voltage limit as determined and consistently applied by the system or facility owner. Applicable Ratings may include Emergency Ratings applicable for short durations as required to permit operating steps necessary to maintain system control. All Ratings must be established consistent with applicable NERC Reliability Standards addressing Facility Ratings.

b) Planned or controlled interruption of electric supply to radial customers or some local Network customers, connected to or supplied by the Faulted element or by the affected area, may occur in certain areas without impacting the overall reliability of the interconnected transmission systems. To prepare for the next contingency, system adjustments are permitted, including curtailments of contracted Firm (non-recallable reserved) electric power Transfers.

c) Depending on system design and expected system impacts, the controlled interruption of electric supply to customers (load shedding), the planned removal from service of certain generators, and/or the curtailment of contracted Firm (non-recallable reserved) electric power transfers may be necessary to maintain the overall reliability of the interconnected transmission systems.

d) A number of extreme contingencies that are listed under Category D and judged to be critical by the transmission planning entity(ies) will be selected for evaluation. It is not expected that all possible facility outages under each listed contingency of Category D will be evaluated.

e) Normal clearing is when the protection system operates as designed and the Fault is cleared in the time normally expected with proper functioning of the installed protection systems. Delayed clearing of a Fault is due to failure of any protection system component such as a relay, circuit breaker, or current transformer, and not because of an intentional design delay.

f) System assessments may exclude these events where multiple circuit towers are used over short distances (e.g., station entrance, river crossings) in accordance with Regional exemption criteria.

Appendix 1

Interpretation of TPL-002-0 Requirements R1.3.2 and R1.3.12 and TPL-003-0 Requirements R1.3.2 and R1.3.12 for Ameren and MISO

NERC received two requests for interpretation of identical requirements (Requirements R1.3.2 and R1.3.12) in TPL-002-0 and TPL-003-0 from the Midwest ISO and Ameren. These requirements state:

TPL-002-0:

[To be valid, the Planning Authority and Transmission Planner assessments shall:]

R1.3 Be supported by a current or past study and/or system simulation testing that addresses each of the following categories, showing system performance following Category B of Table 1 (single contingencies). The specific elements selected (from each of the following categories) for inclusion in these studies and simulations shall be acceptable to the associated Regional Reliability Organization(s).

- **R1.3.2** Cover critical system conditions and study years as deemed appropriate by the responsible entity.
- **R1.3.12** Include the planned (including maintenance) outage of any bulk electric equipment (including protection systems or their components) at those demand levels for which planned (including maintenance) outages are performed.

TPL-003-0:

[To be valid, the Planning Authority and Transmission Planner assessments shall:]

R1.3 Be supported by a current or past study and/or system simulation testing that addresses each of the following categories, showing system performance following Category C of Table 1 (multiple contingencies). The specific elements selected (from each of the following categories) for inclusion in these studies and simulations shall be acceptable to the associated Regional Reliability Organization(s).

- **R1.3.2** Cover critical system conditions and study years as deemed appropriate by the responsible entity.
- **R1.3.12** Include the planned (including maintenance) outage of any bulk electric equipment (including protection systems or their components) at those demand levels for which planned (including maintenance) outages are performed.

Requirement R1.3.2

Request for Interpretation of TPL-002-0 and TPL-003-0 Requirement R1.3.2 Received from Ameren on July 25, 2007:

Ameren specifically requests clarification on the phrase, 'critical system conditions' in R1.3.2. Ameren asks if compliance with R1.3.2 requires multiple contingent generating unit Outages as part of possible generation dispatch scenarios describing critical system conditions for which the system shall be planned and modeled in accordance with the contingency definitions included in Table 1.

Request for Interpretation of TPL-002-0 and TPL-003-0 Requirement R1.3.2 Received from MISO on August 9, 2007:

MISO asks if the TPL standards require that any specific dispatch be applied, other than one that is representative of supply of firm demand and transmission service commitments, in the modeling of system contingencies specified in Table 1 in the TPL standards.

MISO then asks if a variety of possible dispatch patterns should be included in planning analyses including a probabilistically based dispatch that is representative of generation deficiency scenarios, would it be an appropriate application of the TPL standard to apply the transmission contingency conditions in Category B of Table 1 to these possible dispatch pattern.

The following interpretation of TPL-002-0 and TPL-003-0 Requirement R1.3.2 was developed by the NERC Planning Committee on March 13, 2008:

The selection of a credible generation dispatch for the modeling of critical system conditions is within the discretion of the Planning Authority. The Planning Authority was renamed "Planning Coordinator" (PC) in the Functional Model dated February 13, 2007. (TPL -002 and -003 use the former "Planning Authority" name, and the Functional Model terminology was a change in name only and did not affect responsibilities.)

– Under the Functional Model, the Planning Coordinator "Provides and informs Resource Planners, Transmission Planners, and adjacent Planning Coordinators of the methodologies and tools for the simulation of the transmission system" while the Transmission Planner "Receives from the Planning Coordinator methodologies and tools for the analysis and development of transmission expansion plans." A PC's selection of "critical system conditions" and its associated generation dispatch falls within the purview of "methodology."

Furthermore, consistent with this interpretation, a Planning Coordinator would formulate critical system conditions that may involve a range of critical generator unit outages as part of the possible generator dispatch scenarios.

Both TPL-002-0 and TPL-003-0 have a similar measure M1:

> **M1.** The Planning Authority and Transmission Planner shall have a valid assessment and corrective plans as specified in Reliability Standard TPL-002-0_R1 [or TPL-003-0_R1] and TPL-002-0_R2 [or TPL-003-0_R2]."

The Regional Reliability Organization (RRO) is named as the Compliance Monitor in both standards. Pursuant to Federal Energy Regulatory Commission (FERC) Order 693, FERC eliminated the RRO as the appropriate Compliance Monitor for standards and replaced it with the Regional Entity (RE). See paragraph 157 of Order 693. Although the referenced TPL standards still include the reference to the RRO, to be consistent with Order 693, the RRO is replaced by the RE as the Compliance Monitor for this interpretation. As the Compliance Monitor, the RE determines what a "valid assessment" means when evaluating studies based upon specific sub-requirements in R1.3 selected by the Planning Coordinator and the Transmission Planner. If a PC has Transmission Planners in more than one region, the REs must coordinate among themselves on compliance matters.

Requirement R1.3.12

Request for Interpretation of TPL-002-0 and TPL-003-0 Requirement R1.3.12 Received from Ameren on July 25, 2007:

Ameren also asks how the inclusion of planned outages should be interpreted with respect to the contingency definitions specified in Table 1 for Categories B and C. Specifically, Ameren asks if R1.3.12 requires that the system be planned to be operated during those conditions associated with planned outages consistent with the performance requirements described in Table 1 plus any unidentified outage.

Request for Interpretation of TPL-002-0 and TPL-003-0 Requirement R1.3.12 Received from MISO on August 9, 2007:

MISO asks if the term "planned outages" means only already known/scheduled planned outages that may continue into the planning horizon, or does it include potential planned outages not yet scheduled that may occur at those demand levels for which planned (including maintenance) outages are performed?

If the requirement does include not yet scheduled but potential planned outages that could occur in the planning horizon, is the following a proper interpretation of this provision?

The system is adequately planned and in accordance with the standard if, in order for a system operator to potentially schedule such a planned outage on the future planned system, planning studies show that a system adjustment (load shed, re-dispatch of generating units in the interconnection, or system reconfiguration) would be required concurrent with taking such a planned outage in order to prepare for a Category B contingency (single element forced out of service)? In other words, should the system in effect be planned to be operated as for a Category C3 n-2 event, even though the first event is a planned base condition?

If the requirement is intended to mean only known and scheduled planned outages that will occur or may continue into the planning horizon, is this interpretation consistent with the original interpretation by NERC of the standard as provided by NERC in response to industry questions in the Phase I development of this standard1?

The following interpretation of TPL-002-0 and TPL-003-0 Requirement R1.3.12 was developed by the NERC Planning Committee on March 13, 2008:

This provision was not previously interpreted by NERC since its approval by FERC and other regulatory authorities. TPL-002-0 and TPL-003-0 explicitly provide that the inclusion of planned (including maintenance) outages of any bulk electric equipment at demand levels for which the planned outages are required. For studies that include planned outages, compliance with the contingency assessment for TPL-002-0 and TPL-003-0 as outlined in Table 1 would include any necessary system adjustments which might be required to accommodate planned outages since a planned outage is not a "contingency" as defined in the *NERC Glossary of Terms Used in Standards.*

A. Introduction

1. Title: System Performance Following Extreme Events Resulting in the Loss of Two or More Bulk Electric System Elements (Category D)

2. Number: TPL-004-0

3. Purpose: System simulations and associated assessments are needed periodically to ensure that reliable systems are developed that meet specified performance requirements, with sufficient lead time and continue to be modified or upgraded as necessary to meet present and future System needs.

4. Applicability:

4.1. Planning Authority

4.2. Transmission Planner

5. Effective Date: April 1, 2005

B. Requirements

R1. The Planning Authority and Transmission Planner shall each demonstrate through a valid assessment that its portion of the interconnected transmission system is evaluated for the risks and consequences of a number of each of the extreme contingencies that are listed under Category D of Table I. To be valid, the Planning Authority's and Transmission Planner's assessment shall:

R1.1. Be made annually.

R1.2. Be conducted for near-term (years one through five).

R1.3. Be supported by a current or past study and/or system simulation testing that addresses each of the following categories, showing system performance following Category D contingencies of Table I. The specific elements selected (from within each of the following categories) for inclusion in these studies and simulations shall be acceptable to the associated Regional Reliability Organization(s).

R1.3.1. Be performed and evaluated only for those Category D contingencies that would produce the more severe system results or impacts. The rationale for the contingencies selected for evaluation shall be available as supporting information. An explanation of why the remaining simulations would produce less severe system results shall be available as supporting information.

R1.3.2. Cover critical system conditions and study years as deemed appropriate by the responsible entity.

R1.3.3. Be conducted annually unless changes to system conditions do not warrant such analyses.

R1.3.4. Have all projected firm transfers modeled.

R1.3.5. Include existing and planned facilities.

R1.3.6. Include Reactive Power resources to ensure that adequate reactive resources are available to meet system performance.

R1.3.7. Include the effects of existing and planned protection systems, including any backup or redundant systems.

R1.3.8. Include the effects of existing and planned control devices.

R1.3.9. Include the planned (including maintenance) outage of any bulk electric equipment (including protection systems or their components) at those demand levels for which planned (including maintenance) outages are performed.

R1.4. Consider all contingencies applicable to Category D.

R2. The Planning Authority and Transmission Planner shall each document the results of its reliability assessments and shall annually provide the results to its entities' respective NERC Regional Reliability Organization(s), as required by the Regional Reliability Organization.

C. Measures

M1. The Planning Authority and Transmission Planner shall have a valid assessment for its system responses as specified in Reliability Standard TPL-004-0_R1.

M2. The Planning Authority and Transmission Planner shall provide evidence to its Compliance Monitor that it reported documentation of results of its reliability assessments per Reliability Standard TPL-004-0_R1.

D. Compliance

1. Compliance Monitoring Process

1.1. Compliance Monitoring Responsibility

Compliance Monitor: Regional Reliability Organization.

Each Compliance Monitor shall report compliance and violations to NERC via the NERC Compliance Reporting Process.

1.2. Compliance Monitoring Period and Reset Timeframe

Annually.

1.3. Data Retention

None specified.

1.4. Additional Compliance Information

None.

2. Levels of Non-Compliance

2.1. Level 1: A valid assessment, as defined above, for the near-term planning horizon is not available.

2.2. Level 2: Not applicable.

2.3. Level 3: Not applicable.

2.4. Level 4: Not applicable.

B. Regional Differences

1. None identified.

Version History

Version	Date	Action	Change Tracking
0	April 1, 2005	Effective Date	New

Table I. Transmission System Standards – Normal and Emergency Conditions

Category	Contingencies	System Limits or Impacts		
	Initiating Event(s) and Contingency Element(s)	System Stable and both Thermal and Voltage Limits within Applicable Rating [a]	Loss of Demand or Curtailed Firm Transfers	Cascading Outages
A No Contingencies	All Facilities in Service	Yes	No	No
B Event resulting in the loss of a single element.	Single Line Ground (SLG) or 3-Phase (3Ø) Fault, with Normal Clearing: 1. Generator 2. Transmission Circuit 3. Transformer Loss of an Element without a Fault.	Yes Yes Yes Yes	No [b] No [b] No [b] No [b]	No No No No
	Single Pole Block, Normal Clearing[e]: 4. Single Pole (dc) Line	Yes	No[b]	No
C Event(s) resulting in the loss of two or more (multiple) elements.	SLG Fault, with Normal Clearing[e]: 1. Bus Section 2. Breaker (failure or internal Fault)	Yes Yes	Planned/ Controlled[c] Planned/ Controlled[c]	No No
	SLG or 3Ø Fault, with Normal Clearing[e], Manual System Adjustments, followed by another SLG or 3Ø Fault, with Normal Clearing[e]: 3. Category B (B1, B2, B3, or B4) contingency, manual system adjustments, followed by another Category B (B1, B2, B3, or B4) contingency	Yes	Planned/ Controlled[c]	No
	Bipolar Block, with Normal Clearing[e]: 4. Bipolar (dc) Line Fault (non 3Ø), with Normal Clearing[e]: 5. Any two circuits of a multiple circuit towerline[f]	Yes Yes	Planned/ Controlled[c] Planned/ Controlled[c]	No No
	SLG Fault, with Delayed Clearing[e] (stuck breaker or protection system failure): 6. Generator 7. Transformer 8. Transmission Circuit 9. Bus Section	Yes Yes Yes Yes	Planned/ Controlled[c] Planned/ Controlled[c] Planned/ Controlled[c] Planned/ Controlled[c]	No No No No

D [d] Extreme event resulting in two or more (multiple) elements removed or Cascading out of service	3Ø Fault, with Delayed Clearing[e] (stuck breaker or protection system failure): 1. Generator 2. Transmission Circuit 3. Transformer 4. Bus Section 3Ø Fault, with Normal Clearing[e]: 5. Breaker (failure or internal Fault) 6. Loss of towerline with three or more circuits 7. All transmission lines on a common right-of way 8. Loss of a substation (one voltage level plus transformers) 9. Loss of a switching station (one voltage level plus transformers) 10. Loss of all generating units at a station 11. Loss of a large Load or major Load center 12. Failure of a fully redundant Special Protection System (or remedial action scheme) to operate when required 13. Operation, partial operation, or misoperation of a fully redundant Special Protection System (or Remedial Action Scheme) in response to an event or abnormal system condition for which it was not intended to operate 14. Impact of severe power swings or oscillations from Disturbances in another Regional Reliability Organization.	Evaluate for risks and consequences. ▪ May involve substantial loss of customer Demand and generation in a widespread area or areas. ▪ Portions or all of the interconnected systems may or may not achieve a new, stable operating point. ▪ Evaluation of these events may require joint studies with neighboring systems.

a) Applicable rating refers to the applicable Normal and Emergency facility thermal Rating or System Voltage Limit as determined and consistently applied by the system or facility owner. Applicable Ratings may include Emergency Ratings applicable for short durations as required to permit operating steps necessary to maintain system control. All Ratings must be established consistent with applicable NERC Reliability Standards addressing Facility Ratings.

b) Planned or controlled interruption of electric supply to radial customers or some local network customers, connected to or supplied by the Faulted element or by the affected area, may occur in certain areas without impacting the overall reliability of the interconnected transmission systems. To prepare for the next contingency, system adjustments are permitted, including curtailments of contracted Firm (non-recallable reserved) electric power Transfers.

c) Depending on system design and expected system impacts, the controlled interruption of electric supply to customers (load shedding), the planned removal from service of certain generators, and/or the curtailment of contracted Firm (non-recallable reserved) electric power Transfers may be necessary to maintain the overall reliability of the interconnected transmission systems.

d) A number of extreme contingencies that are listed under Category D and judged to be critical by the transmission planning entity(ies) will be selected for evaluation. It is not expected that all possible facility outages under each listed contingency of Category D will be evaluated.

e) Normal clearing is when the protection system operates as designed and the Fault is cleared in the time normally expected with proper functioning of the installed protection systems. Delayed clearing of a Fault is due to failure of any protection system component such as a relay, circuit breaker, or current transformer, and not because of an intentional design delay.

f) System assessments may exclude these events where multiple circuit towers are used over short distances (e.g., station entrance, river crossings) in accordance with Regional exemption criteria.

Appendix B. Receiving Station Loads

Appendix B. RECEIVING STATION LOADS

SERVICE AREA	RECEIVING STATION		BASECASE YEAR																			
			2013		2014		2015		2016		2017		2018		2019		2020		2021		2022	
			MW	Mvar	MW	Mvar	MW	Mvar	MW	Mvar	MW	Mvar	MW	Mvar	MW	Mvar	MW	Mvar	MW	Mvar	MW	Mvar
CENTRAL	RS-N	AIRPORT	203	62									204	62							215	66
	RS-G	ATWATER	306	68									308	69							322	72
	RS-B	CENTURY	291	72									297	73							314	77
	RS-D	FAIRFAX	382	94									379	93							396	98
	RS-H	HOLLYWOOD	384	73									393	74							412	78
	RS-P	MARKET (RIVER)	353	54									347	53							361	56
	RS-K	OLYMPIC	398	115									411	119							430	124
	RS-L	SCATTERGOOD	25	12									25	12							26	12
	RS-A	ST JOHN	215	49									216	49							227	52
	RS-F	VELASCO	217	48									216	48							226	50
	Total Central Load		2774	647									2796	653							2929	685
SOUTHERN	RS-HAL	HALLDALE	46	17									47	18							50	19
	RS-Q	HARBOR	195	59									193	58							203	61
	RS-C	WILMINGTON	158	20									157	20							165	21
	Total Southern Load		399	96									397	96							417	100
VALLEY	RS-T	CANOGA	355	65									343	63							359	66
	RS-V	CHATSWORTH																				
	RS-J	NORTHRIDGE	513	96									535	100							562	105
	RS-RIN	RINALDI	282	69									291	72							307	75
	RS-U	TARZANA	330	64									336	65							355	68
	RS-E	TOLUCA	384	80									386	80							406	84
	RS-M	VALLEY	299	86									303	87							319	92
	RS-S	VAN NUYS	404	54									416	56							439	59
	Total Valley Load		2566	514									2609	523							2746	550
TOTAL RECEIVING STATION LOAD			**5739**	**1258**									**5802**	**1272**							**6092**	**1335**

Appendix C. Generation Schedule for LADWP-Owned Facilities (MW)

Appendix C. Generation Schedule for LADWP-Owned Facilities (MW)

GENERATING UNIT	kV	NET MAX PLANT CAPABILITY * (MW)	2013 Heavy Summer	2018 Heavy Summer			2022 Heavy Summer		2015 Heavy Winter	2017 Light Winter
				HS18	High Castaic	High VIC-LA	HS 2022	High Castaic		
CASTAI1G	18.0		125	87	153	10	116	42	178	**-116**
CASTAI2G	18.0				200			200	200	0
CASTAI3G	18.0				200			200		
CASTAI4G	18.0				200			200		0
CASTAI5G	18.0				200			200		
CASTAI6G	18.0				200			200		
CASTAI7G	11.5									
Pumped Storage		1247	125	87	1153	10	116	1042	378	0
OWENS UP	11.5	37.5	37	37	37	37	37	37	37	
OWENSCON	11.5	37.5	36	37	37	36	36	36	36	
OWENSMID	11.5	37.5	37	36	36	37	37	37	37	
PP 1 G	7.5	46.5	40	40	40	40	40	40	30	40
PP 2 G	7.5	18	10	10	10	10	10	10	20	10
Hoover		491	491	495	495	495	495	495	495	495
Hydro-electric		668	651	655	655	655	655	655	655	545
HARB1G	13.8	82	81	81	81	81	81	81	80	
HARB2G	13.8	82	81	81	81	81	81	81	80	
HARB5G	13.8	65	65	65	65	65	65	65	60	
HARBCT10	13.8	47.4								
HARBCT11	13.8	47.4								
HARBCT12	13.8	47.4								
HARBCT13	13.8	47.4								
HARBCT14	13.8	47.4								
HAYNES1G	18.0	222	150	100	100	85	50	100	220	111
HAYNES2G	18.0	222	100							
HAYNES5G	18.0	292								
HAYNES6G	18.0	243								
HAYNES8G	18.0	250	200	100	100	100	200	150		100
HAYNES9G	18.0	162.5	100	100	100	100	150	150		150
HAYNS10G	18.0	162.5	100	100	100	100	150	150		0
HYN1112G	13.8	100								40
HYN1112G	13.8	100								40
HYN1314G	13.8	100								40
HYN1314G	13.8	100								40
HYN1516G	13.8	100								30
HYN1516G	13.8	100								30
SCATT1G	18.0	183	170	40	40	40	100	40		
SCATT2G	18.0	184							170	85
SCATT3G	24.0	450	400							
SCATT4ST	13.8	215		100	100	100	100	100		
SCATT5GT	13.8	131.8		100	100	100	100	100		
SCATT6GT	13.8	131.8		100	100	100	100	100		
SCATT7GT	13.8	131.8		100	100	100	100	100		
VALLEY5G	13.8	43								
VALLEY6G	18.0	159	145	100	100	100	100	150		60
VALLEY7G	18.0	159	145	100	100	100	100	150		60
VALLEY8G	18.0	215	200	100	100	100	100	200		60
Natural Gas		3638	1937	1367	1367	1352	1577	1717	610	846
PTSOL	0.48	8.5	8	8	8	8	8	8	8	
AD SOLAR	0.26	10	10	10	10	10	10	10	10	
BEACONPV	0.29	270		208	208	208	208	208		
OWENYO_S	0.48	200		124	124	124	124	124		
ODLSR	0.21	100					62	62		
RE-BR1	0.80	60		50	50	50	50	50		
COL1FDR	0.48	25		25		25	25			
COL2FDR	0.48	25		25		25	25			
COL3FDR	0.48	25		25		25	25			
COL4FDR	0.48	25		25		25	25			
COL5FDR	0.48	25		25		25	25			
COL6FDR	0.48	25		25		25	25			
COL7FDR	0.48	25		25		25	25			
COL8FDR	0.48	25		25		25	25			
COL9FDR	0.48	25		25		25	25			
COL10FDR	0.48	25		25		25	25			
KRDGEN	0.80	250		250		250	250			
Solar		1148.5	18	900	400	900	962.2	462.2	18	0
PTWTG	0.57	135	82	82	82	82	82	82	40	40
PCWTG	0.57	150		91	91	91	91	91		
WTGCP	0.69	100	40	40	40	145	40	40	145	20
WTGGE	0.57	100	40	40	40	59	40	40	55	40
WTGGE2	0.57	100	40	40	40	101	40	40	100	20
Wind		585	202	292	292	476	292	292	340	120
NAVAJO 1	26	159	159	0	0	0	0	0	0	0
NAVAJO 2	26	159	159	0	0	0	0	0	0	0
NAVAJO 3	26	159	159	0	0	0	0	0	0	0
INTERMT1G	26	587	546	546	546	546	546	546	546	546
INTERMT2G	26	587	546	546	546	546	546	546	546	546
Coal		1652	1569	1092	1092	1092	1092	1092	1092	1092
PALOVRD1	24	129	129	129	129	129	129	129	129	129
PALOVRD2	24	129	129	129	129	129	129	129	129	129
PALOVRD3	24	129	129	129	129	129	129	129	129	129
Nuclear		387	387	387	387	387	387	387	387	387
TOTAL GENERATION		**9325**	**4889**	**4780**	**5346**	**4873**	**5081**	**5647**	**3480**	**2990**

RENEWABLE ENERGY RESOURCES REPRESENTED IN THE HEAVY SUMMER 2018 BASECASE

TECHNOLOGY	Ownership	Commercial Operation Date	MAXIMUM INSTALLED CAPACITY (MW)	GENERATION DISPATCH (MW)	ENERGY (Gwh)
BIOMASS					
Atmos Energy Landfill Gas	PPA	In-service	0	N/A	210
Hyperion Digester Gas	Own	In-service	16	N/A	131
Lopez Microturbine	Own	In-service	1.5	N/A	1
Shell Energy Landfill Gas	PPA	In-service	0	N/A	400
Toyon Power Plant	PPA	In-service	3.6	N/A	7.4
WM Bradley	PPA	In-service	6.4	N/A	44
SMALL HYDRO					
Aqueduct & Owens Valley	Own	In-service	54	50	287
Owens Gorge	Own	In-service	110	110	261
MWD Sepulveda	Own	In-service	8.5	N/A	42
Castaic U3&U5 Upgrade	Own	In-service	30	30	15
Castaic U1 Upgrade	Own	In-service	15	15	7.5
Aquaduct PP Improvements	Own	7/1/2016	4	4	30
Powerex - BC Hydro	PPA	In-service	50	50	430
North Hollywood PS Power Plant	Own	In-service	1	N/A	5
Water System Hydro	Own	7/1/2016	4	0	22
SOLAR					
DWP Built Solar	Own	In-service	2.1	N/A	3.8
Solar CNM(SB1)	Own	In-service	51.7	N/A	85.3
LADWP-Built Solar (In-Basin)	Own	2012-19	100	N/A	180
Solar Customer Net Metered	Own	2012-30	79*	N/A	117
Pine Tree Solar	Own	In-service	8.5	8.5	17
Adelanto Solar	Own	In-service	10	10	20
Solar Feed-In-Tarriff	PPA	2012-26	150	N/A	253
Southern Owens Valley Solar Ranch	Own	2017-20	200	200	440
Solar PPA 2015 R	PPA/Own	2015	60	60	164
Solar PPA 2015 B	PPA/Own	2016	250	250	575
Solar PPA 2015 CM	PPA/Own	2015	210	453	477
Solar PPA 2015 K	PPA/Own	2015	225	630	347
GEOTHERMAL					
Geo PPA 2015 OW	PPA	2015	11	11	92
Geo PPA 2013 OH	PPA	2013-15	35	N/A	291
Imperial County Joint Geo	Jointly Own	2017	100	N/A	800
WIND					
LADWP					
Pine Tree	Own	In-service	135	40	382
Pine Canyon	Own	2018	100	100	325
Utah/Wyoming					
PPM Wyoming	PPA	In-service	82.2	12	233
Milford Phase I	PPA/Own	In-service	203.5	40	434
Milford Phase II	PPA/Own	In-service	102	40	217
Pacific Northwest					
Linden	Own	In-service	50	20	145
Pebble Springs	PPA	In-service	68.7	10	193
Willow Creek	PPA	In-service	72	11	197
Windy Point	PPA/Own	In-service	262	12	694

* Netting with RS loads

TOTAL = 8,575
2018 Forecasted Total Sale = 23,667
% Renewables = 36%

Appendix D. Transmission Line Capacities

Appendix D. Transmission Line Capacities

LINE	CONTINUOUS RATING			EMERGENCY RATING		
	AMP	MVA	LIMITING COMPONENT	AMP	MVA	LIMITING COMPONENT
69kV LINES						
Burbank, Toluca -Valley Line 1	850	102	OH Line	977	117	OH Line
Burbank, Toluca -Valley Line 2	765	91	OH Line	879	105	OH Line
Burbank, Toluca -Valley Line 3	765	91	OH Line	879	105	OH Line
Burbank, Toluca - Capon Line 1	686	82	OH Line	789	94	OH Line
Burbank, Toluca - Capon Line 2	769	92	OH Line	884	106	OH Line
Burbank, Toluca - Capon Line 3	765	91	OH Line	879	105	OH Line
RS - E 230 - 69KV Bank E (MUNI)	-	403	Xfmr E	-	403	Xfmr E
RS - E 230 - 69KV Bank F (MUNI)	-	403	Xfmr F	-	403	Xfmr F
115kV LINES						
Power Plant 1 - Power Plant 2 Tie Line	443	88	OH Line	600	120	Circuit breaker
Power Plant 1 - Olive Line 1	-	80	Xfmr H	-	90	Xfmr H
Power Plant 2 - Olive Line 1	443	88	OH Line	600	120	Disc Sw & CB
138kV LINES						
Century - Gramercy Line 1	763	182	OH Line	1200	287	Wave Trap
Century - Gramercy Line 2	763	182	OH Line	1200	287	Wave Trap
Century - Wilmington Line 1	763	182	OH Line	800	191	Wave Trap
Century - Wilmington Line 2	763	182	OH Line	800	191	Wave Trap
Fairfax - Airport Line 1	1049	251	UG Cable	1163	278	UG Cable
Fairfax - Airport Line 2	1049	251	UG Cable	1163	278	UG Cable
Fairfax - Gramercy Line 1	763	182	OH Line	800	191	Reactor
Fairfax - Gramercy Line 1 Rating with L-2 in svc	664	159	UG Cable	736	176	UG Cable
Fairfax - Gramercy Line 2	763	182	OH Line	800	191	Reactor
Fairfax - Gramercy Line 2 Rating with L-1 in svc	664	159	UG Cable	736	176	UG Cable
Fairfax - Olympic Ca A	800	191	Reactor	800	191	Reactor
Fairfax - Olympic Ca A rating with Ca B in-svc	664	159	UG Cable	736	176	UG Cable
Fairfax - Olympic Ca B	800	191	Reactor	800	191	Reactor
Fairfax - Olympic Ca B rating with Ca A in-svc	664	159	UG Cable	736	176	UG Cable
Harbor - Wilmington Ca A	-	90	Xfmr Bank	-	99	Xfmr Bank (4-hr rating)
Harbor - Wilmington Ca B	-	90	Xfmr Bank	-	99	Xfmr Bank (4-hr rating)
Harbor - Wilmington Ca D	800	191	Disc Sw	800	191	Disc Sw
Harbor - Wilmington Ca E	800	191	Disc Sw	800	191	Disc Sw
Hollywood - Fairfax Ca A	800	191	Reactor	800	191	Reactor
Hollywood - Fairfax Ca A Rating with Ca B in-svc	776	185	UG Cable	800	191	Reactor
Hollywood - Fairfax Cable B	800	191	Reactor	800	191	Reactor
Hollywood - Fairfax Ca B Rating in Ca A in-svc	776	185	UG Cable	800	191	UG Cable
Scattergood - Airport Line 1	979	234	OH Line	1163	278	UG Cable
Scattergood - Airport Line 2	979	234	OH Line	1163	278	UG Cable
Tarzana - Olympic Line 1	837	200	UG Cable	837	200	UG Cable
Tarzana - Olympic Line 1 Rating with 2 circuits in svc	-	290	Xfmr E	-	328	Xfmr E
Toluca - Hollywood Line 2	763	182	OH Line	800	191	Disc Sw
Toluca - Hollywood Line 2 Rating with 2 cables in-svc	1200	287	Disc Sw	1200	287	Disc Sw

Appendix D. Transmission Line Capacities

LINE	CONTINUOUS RATING			EMERGENCY RATING		
	AMP	MVA	LIMITING COMPONENT	AMP	MVA	LIMITING COMPONENT
Wilmington - Gramercy Line 1	763	182	OH Line	932	223	UG Cable
Harbor-Tap 1 Line 1	763	182	OH Line	800	191	Disc Sw
Harbor-Tap 2 Line 2	763	182	OH Line	800	191	Disc Sw
Wilmington - Gramercy Line 2	763	182	OH Line	800	191	Disc Sw
230kV LINES						
Atwater - Air Way Line 1	1778	708	OH Line	2000	797	Wave Trap
Atwater - Air Way Line 2	1778	708	OH Line	2000	797	CB & Disc Sw @ RS-Air Way
Atwater - St John Line 1	1360	541	OH Line	1400	558	Disc Sw
Atwater - Velasco Line 1	1360	541	OH Line	1600	637	CB
Barren Ridge - Rinaldi Line 1	1152	459	OH Line	1635	651	OH Line
Castaic - Northridge Line 1	1797	716	Ground Clearance	1797	716	Ground Clearance
Castaic - Olive Line 1	1911	761	OH Line	2000	797	Disc Sw
Castaic - Sylmar Line 1	1855	739	OH Line	2000	797	Disc Sw
Haynes - Atwater Line 1	1600	637	CB	1600	637	CB
Haynes - River Line 1	1600	637	CB	1600	637	CB
Haynes - St John Line 1	1600	637	CB	1600	637	CB
Haynes - Velasco Line 1	1600	637	CB	1600	637	CB
Intermountain - Gonder Line 1	502	200	System Studies	502	200	System Studies
Inyo - Cottonwood Line 1	1152	459	OH Line	1635	651	OH Line
Inyo - Rinaldi	1152	459	OH Line	1635	651	OH Line
Laguna Bell - Velasco Line 1	861	343	OH Line	-	475	Xfmr Bank G
Mead - McCullough Line 1	899	358	OH Line	1486	591	OH Line
Mead - McCullough Line 2	899	358	OH Line	1486	591	OH Line
Northridge - Tarzana Line 3	1437	572	OH Line	2000	797	Disc Sw
Olive-Northridge Line 1	1600	637	Ground Clearance	1600	637	Ground Clearance
Pine Tree-Barren Ridge Line 1	2008	800	Ground Clearance			
Rinaldi - Airway Line 1	1152	459	OH Line	1635	651	OH Line
Rinaldi - Airway Line 2	1152	459	OH Line	1635	651	OH Line
Rinaldi - Tarzana Line 1	1152	459	OH Line	1635	651	OH Line
Rinaldi - Tarzana Line 2	1152	459	OH Line	1635	651	OH Line
River - Market Cable A	-	160	Xfmr A	-	200	Xfmr A
River - Market Cable B	-	160	Xfmr B	-	200	Xfmr B
River - Market Cable C	-	160	Xfmr C	-	200	Xfmr C
River - Market Cable D	-	170	Xfmr D	-	220	Xfmr D
River - Velasco Line 1	1360	542	OH Line	1600	637	CB
Scattergood - Olympic Line 2	876	349	UG Cable	876	349	UG Cable
St John - River Line 1	1778	708	OH Line	2000	797	Wave Trap
Sylmar - Northridge Line 1	1778	708	OH Line	2518	1003	OH Line
Sylmar - Rinaldi Line 1	1778	708	OH Line	2518	1003	OH Line
Sylmar - Rinaldi Line 3	1782	710	OH Line	2582	1029	OH Line
Sylmar - Rinaldi Line 4	1911	761	OH Line	2767	1102	OH Line
Tarzana - Canoga Cable A	-	160	Xfmr A	-	176	Xfmr A (4-hr rating)

Appendix D. Transmission Line Capacities

LINE	CONTINUOUS RATING			EMERGENCY RATING		
	AMP	MVA	LIMITING COMPONENT	AMP	MVA	LIMITING COMPONENT
Tarzana - Canoga Cable B	-	160	Xfmr B	-	176	Xfmr B (4-hr rating)
Tarzana - Canoga Cable C	-	160	Xfmr C	-	176	Xfmr C (4-hr rating)
Tarzana - Olympic Line 3	958	382	UG Cable	1094	436	UG Cable
Toluca - Atwater Line 1	1778	708	OH Line	2000	797	OH Line
Toluca - Hollywood Line 1	876	349	UG Cable	1002	399	UG Cable
Toluca - Hollywood Line 3	-	400	Xfmr F	1152	459	UG Cable
Toluca - Van Nuys Cable A	-	170	Xfmr A	469	187	Disc Sw & CB
Toluca - Van Nuys Cable B	-	160	Xfmr Bank	-	176	Xfmr Bank
Toluca - Van Nuys Cable C	-	160	Xfmr Bank	-	176	Xfmr Bank
Toluca - Van Nuys Cable D	-	160	Xfmr Bank	-	176	Xfmr Bank
Valley - Rinaldi Line 1	1243	495	OH Line	1805	720	OH Line
Valley - Rinaldi Line 2	1243	495	OH Line	1805	720	OH Line
Valley - Toluca Line 1	1243	495	OH Line	1805	720	OH Line
Valley - Toluca Line 2	1243	495	OH Line	1805	720	OH Line
Velasco - Century Line 1	1600	637	CB	1600	637	CB
Velasco - Century Line 2	1600	637	CB	1600	637	CB
287kV LINES						
Mead - Victorville Line 1	-	420	Xfmr	-	520	Xfmr
Victorville - Century Line 1	-	420	Xfmr F or G	-	510	Xfmr F or G
Victorville - Century Line 2	-	420	Xfmr F or G	-	510	Xfmr F or G
Victorville Sw Sta - Bank K TIE	-	465	Xfmr K	-	573	Xfmr K
345kV LINES						
Intermountain - Mona Line 1	1004	600	System Studies	2000	1195	CB & Disc Sw @ Mona
Intermountain - Mona Line 2	1004	600	System Studies	2000	1195	CB & Disc Sw @ Mona
500kV LINES						
Adelanto - Rinaldi Line 1	1752	1593	RS-RIN CB & Disc SW	1752	1593	RS-RIN CB & Disc SW
Adelanto - Toluca Line 1	2000	1819	SF6 Switchgear	2000	1819	SF6 Switchgear
Crystal - McCullough Line 1	2600	2364	Series Cap	3400	3092	Series Cap (1/2-hr rating)
Eldorado - McCullough Line 1	3000	2728	Disc Sw & CB	3000	2728	Disc Sw & CB
Lugo - Victorville Line 1	2771	2400	System Studies	3000	2728	Wave Trap
Marketplace - Adelanto Line 1	1800	1636	Series Cap	2430	2210	Series Cap (1/2-hr rating)
Marketplace - McCullough Line 1	3822	3475	OH Line	4000	3637	Disc Sw & CB
McCullough - Victorville Line 1	1600	1455	Series Cap	2400	2182	Series Cap
McCullough - Victorville Line 2	1600	1455	Series Cap	2400	2182	Series Cap
Mohave - Eldorado Line 1	1386	2000	Stability	1386	1200	Stability
Mohave - Eldorado Line 1	3000	2728	VAR Comp	3000	2728	VAR Comp
Navajo - Crystal Line 1	2200	2001	Series Cap	2750	2501	Series Cap (1/2-hr rating)
Navajo - Moenkopi Line 1	1630	1412	Series Cap	-	-	
Victorville - Adelanto Line 1	3000	2728	Wave Trap	3000	2728	Wave Trap
Victorville - Adelanto Line 2	3000	2728	Wave Trap	3000	2728	Wave Trap
Victorville - Rinaldi Line 1	1839	1593	SF6 Switchgear	2300	1992	SF6 Switchgear

Appendix E. One-Line Diagrams

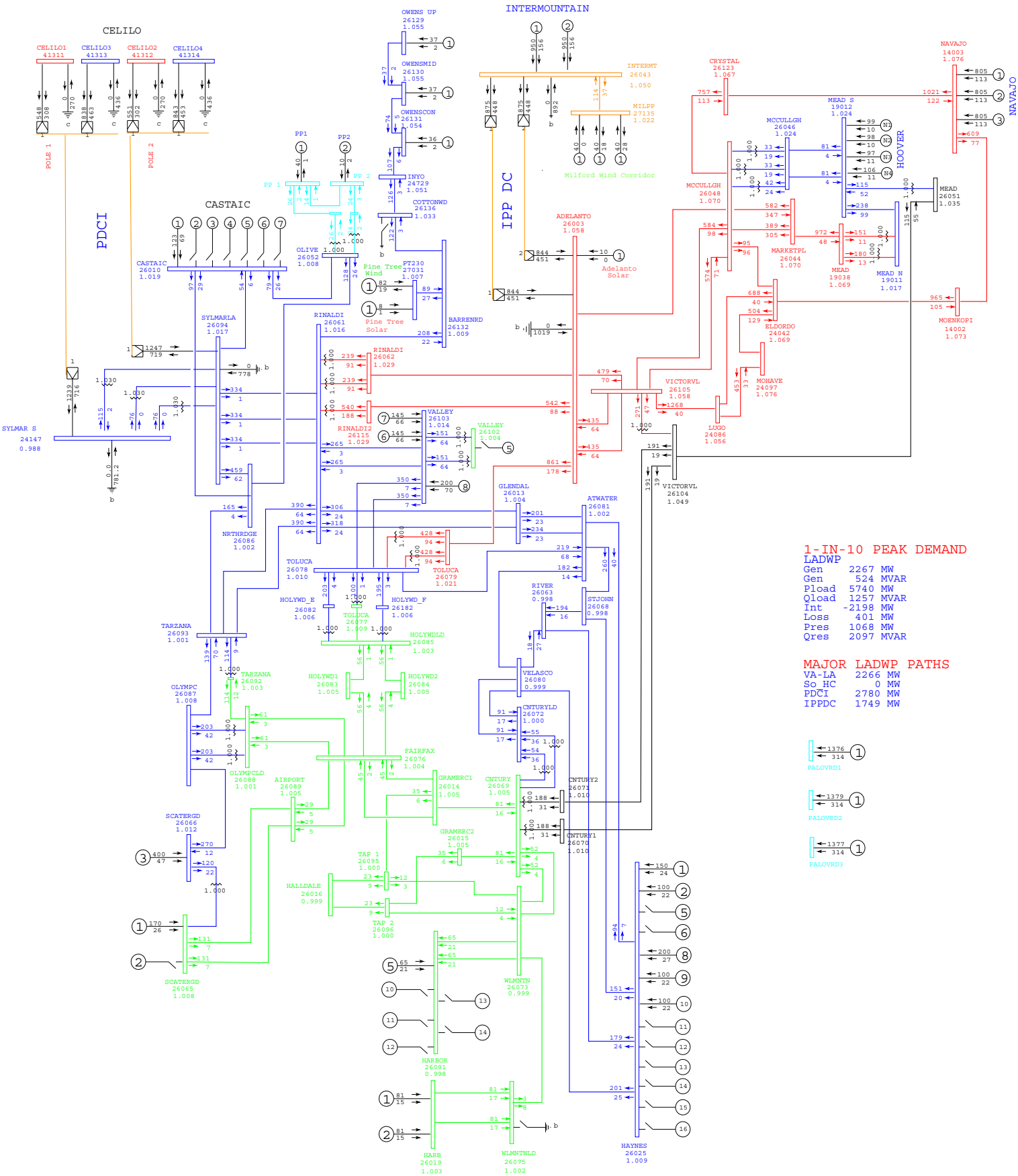

1-IN-10 PEAK DEMAND

LADWP

Gen	2267	MW
Gen	524	MVAR
Pload	5740	MW
Qload	1257	MVAR
Int	-2198	MW
Loss	401	MW
Pres	1068	MW
Qres	2097	MVAR

MAJOR LADWP PATHS

VA-LA	2266	MW
So_HC	0	MW
PDCI	2780	MW
IPPDC	1749	MW

General Electric International, Inc. PSLF Program Tue Dec 04 08:04:24 2012 C:\Gus\2012TYP\2012typ-hs13-pt-n.sav

WESTERN ELECTRICITY COORDINATING COUNCIL

2012 HS4A APPROVED OPERATING CASE

JANUARY 12, 2012

MW/MVAR

Rating = 1

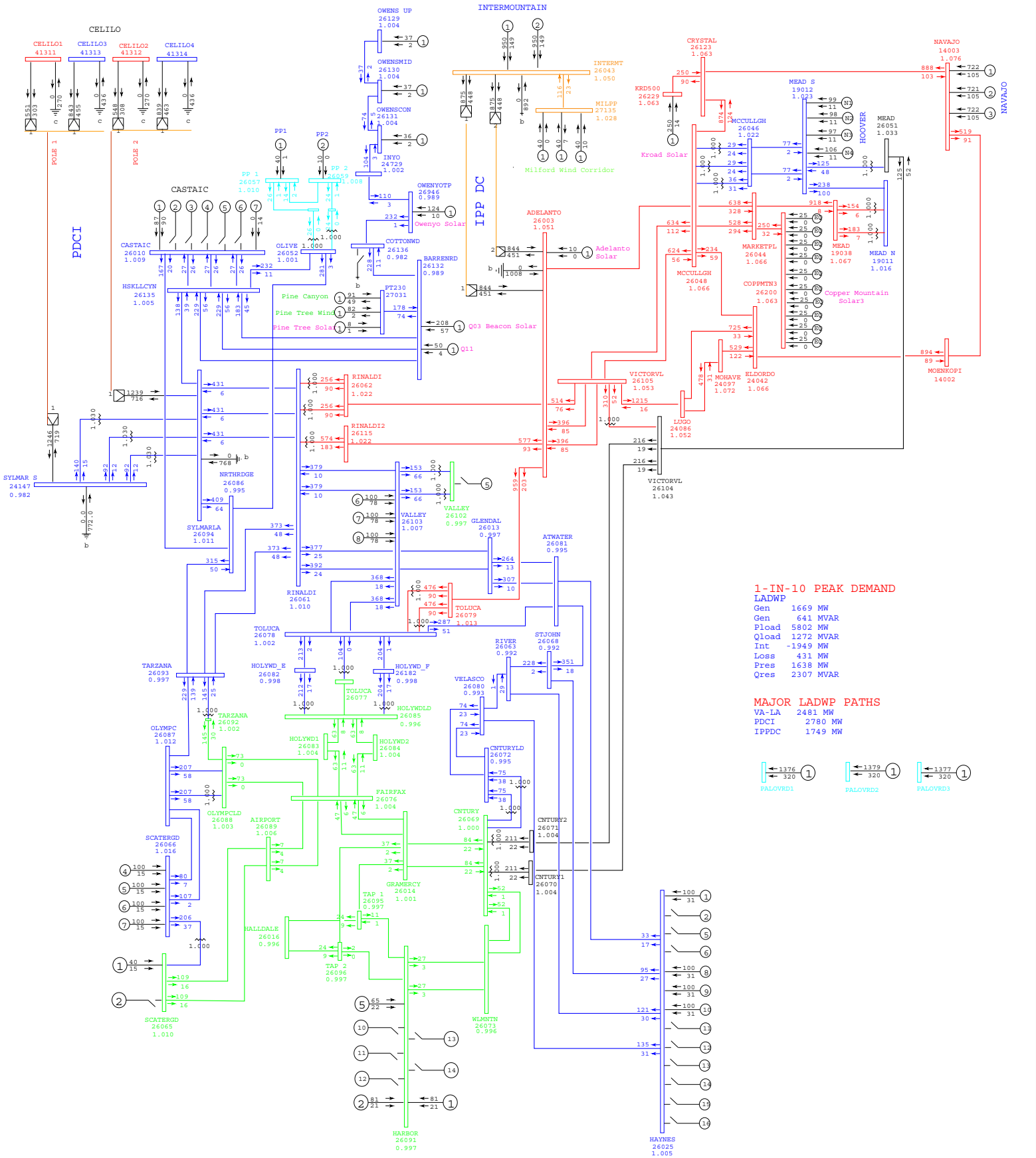

1-IN-10 PEAK DEMAND

LADWP

Gen	1669	MW
Gen	641	MVAR
Pload	5802	MW
Qload	1272	MVAR
Int	-1949	MW
Loss	431	MW
Pres	1638	MW
Qres	2307	MVAR

MAJOR LADWP PATHS

VA-LA	2481	MW
PDCI	2780	MW
IPPDC	1749	MW

General Electric International, Inc. PSLF Program Fri Nov 16 07:41:13 2012 2012typ-hs18.sav

WESTERN ELECTRICITY COORDINATING COUNCIL 2012 HS4A APPROVED OPERATING CASE JANUARY 12, 2012	03/07/12 - 2018 DWP 1-in-10 Summer Peak	MW/MVAR Rating = 1

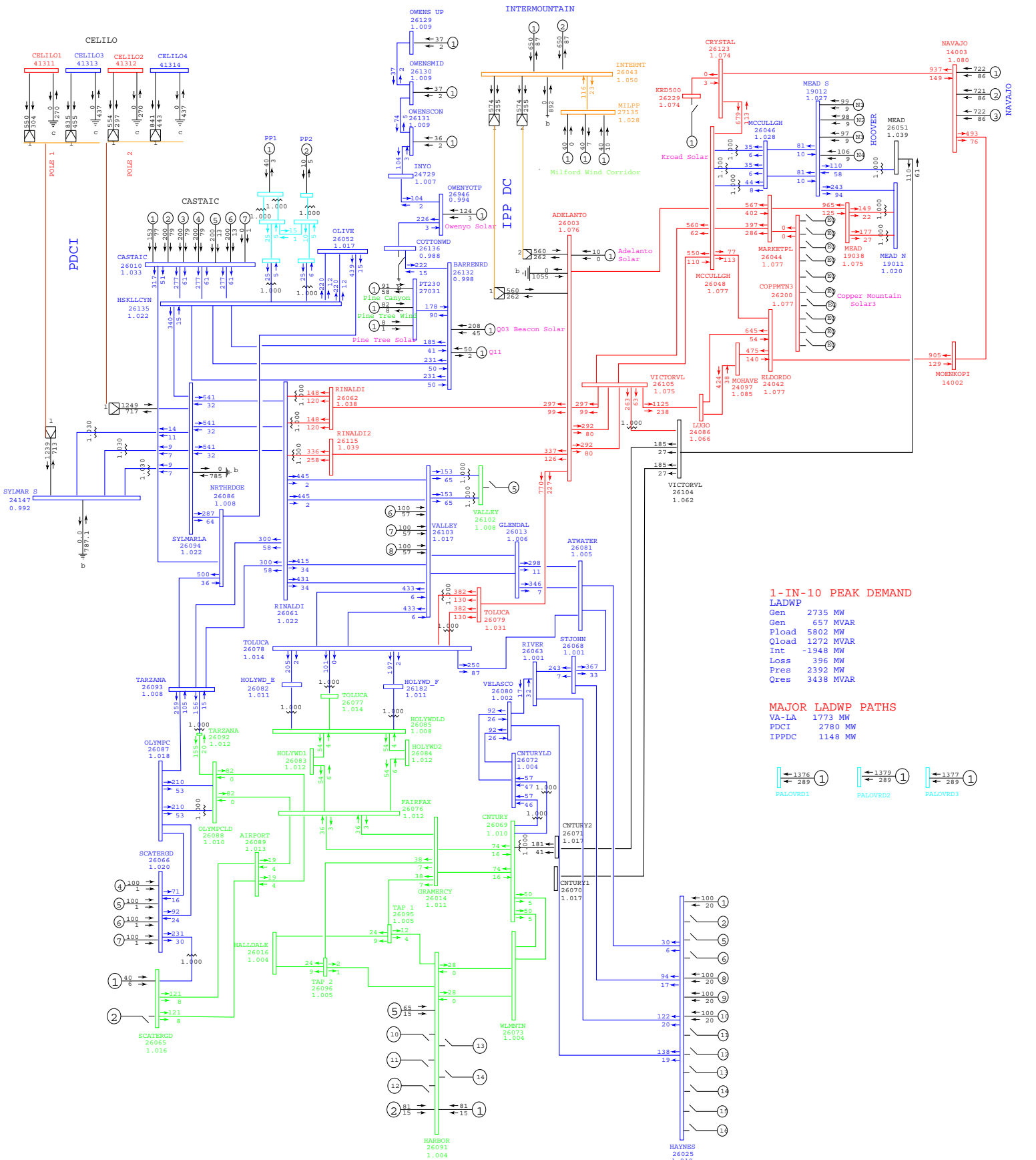

1-IN-10 PEAK DEMAND

LADWP

Gen	2735 MW
Gen	657 MVAR
Pload	5802 MW
Qload	1272 MVAR
Int	-1948 MW
Loss	396 MW
Pres	2392 MW
Qres	3438 MVAR

MAJOR LADWP PATHS

VA-LA	1773 MW
PDCI	2780 MW
IPPDC	1148 MW

General Electric International, Inc. PSLF Program Fri Nov 16 10:55:46 2012 C:\Gus\2012TYP\2012typ-hs18-hicastaic-s-hsk2.

WESTERN ELECTRICITY COORDINATING COUNCIL 2012 HS4A APPROVED OPERATING CASE JANUARY 12, 2012	03/07/12 - 2018 DWP 1-in-10 Summer Peak	MW/MVAR Rating = 1

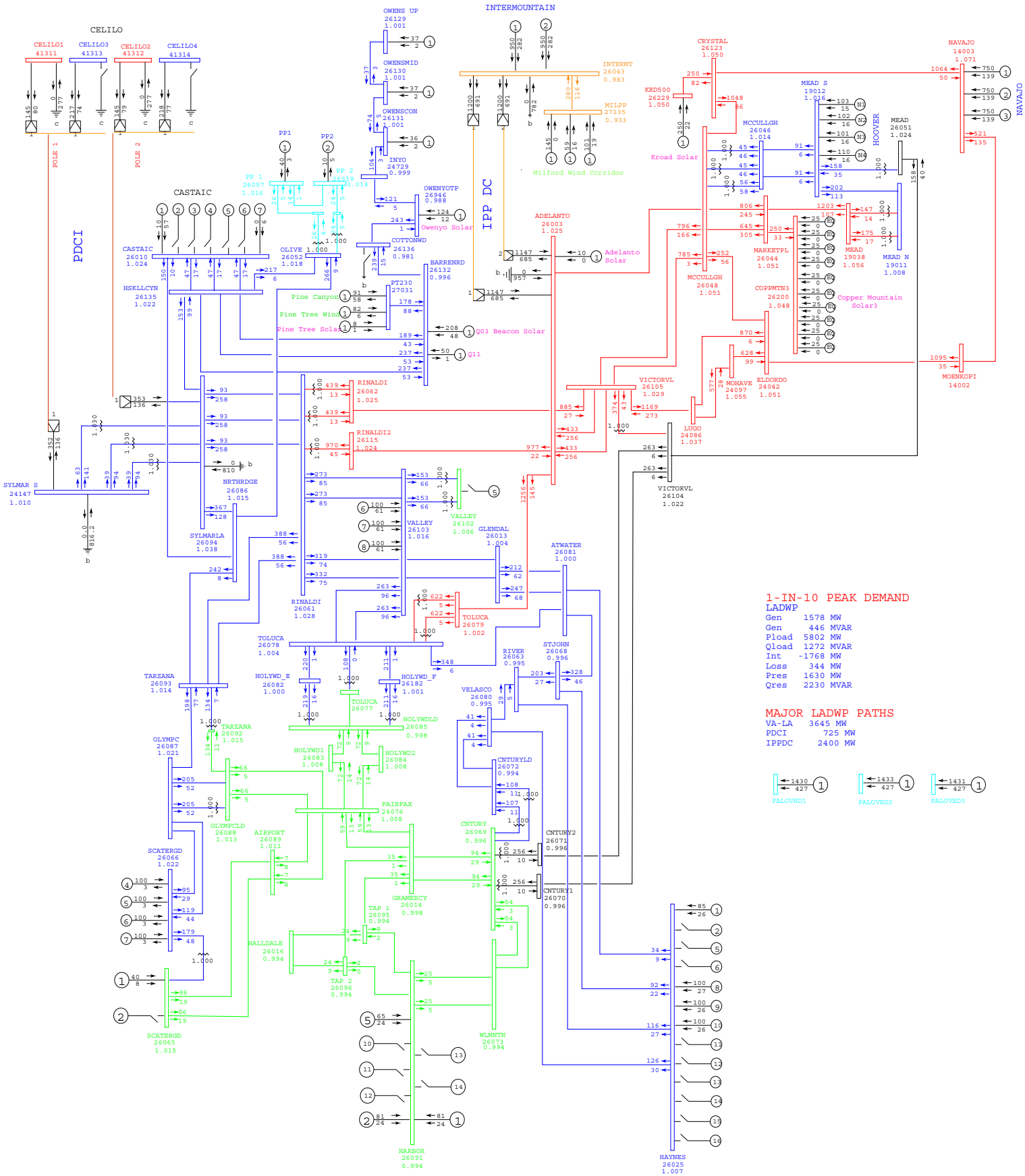

1-IN-10 PEAK DEMAND

LADWP

Gen	1578	MW
Gen	446	MVAR
Pload	5802	MW
Qload	1272	MVAR
Int	-1768	MW
Loss	344	MW
Pres	1630	MW
Qres	2230	MVAR

MAJOR LADWP PATHS

VA-LA	3645	MW
PDCI	725	MW
IPPDC	2400	MW

General Electric International, Inc. PSLF Program Fri Nov 16 12:38:28 2012 C:\Gus\2012TYP\2012typ-hs18-hi-vicla.sav

WESTERN ELECTRICITY COORDINATING COUNCIL 2012 HS4A APPROVED OPERATING CASE JANUARY 12, 2012	03/07/12 - 2018 DWP 1-in-10 Summer Peak	MW/MVAR Rating = 1

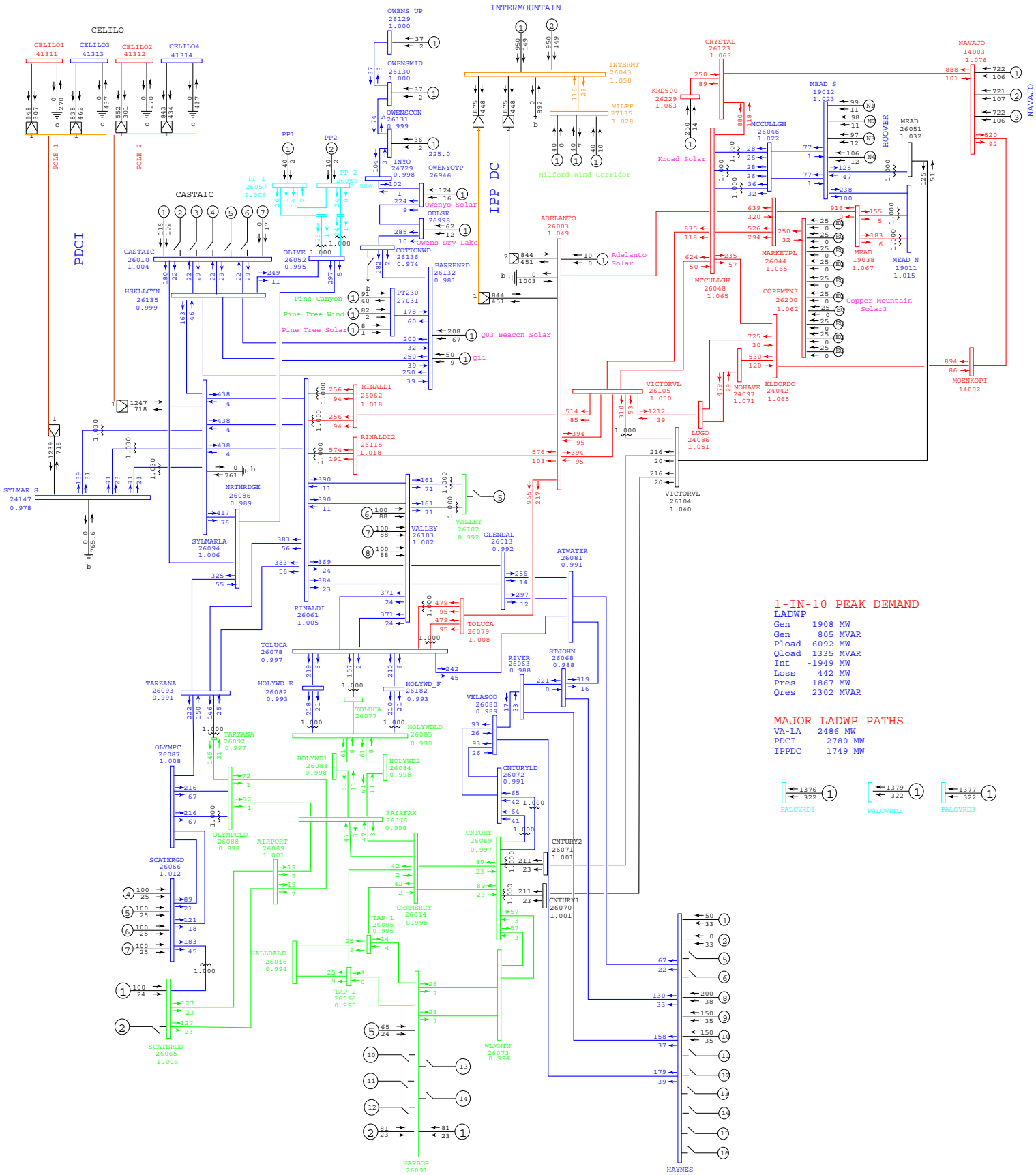

General Electric International, Inc. PSLF Program Fri Nov 16 12:55:17 2012 2012typ-hs22.sav

	WESTERN ELECTRICITY COORDINATING COUNCIL 2012 HS4A APPROVED OPERATING CASE JANUARY 12, 2012	03/07/12 - 2022 DWP 1-in-10 Summer Peak	MW/MVAR Rating = 1

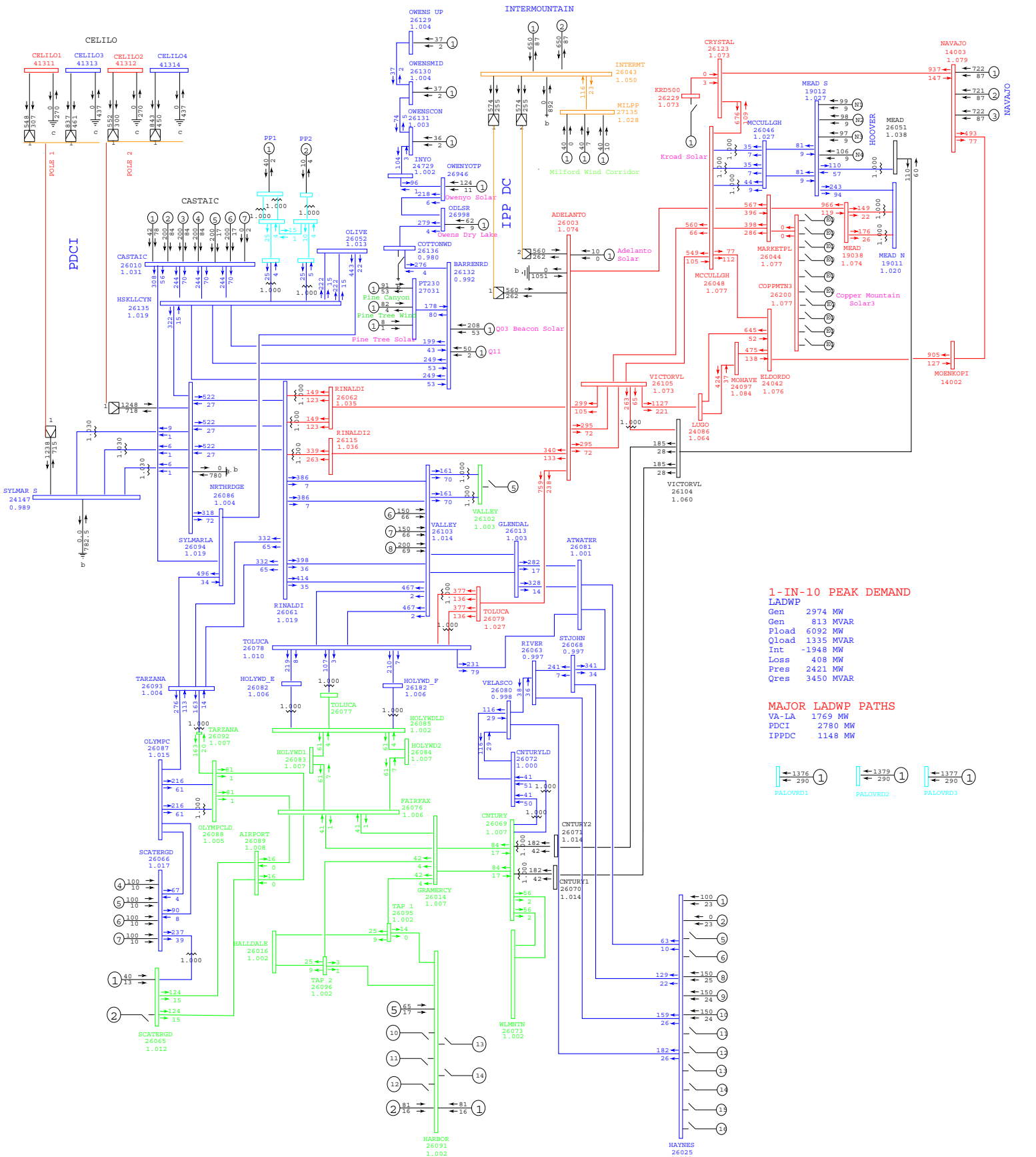

1-IN-10 PEAK DEMAND

LADWP

Gen	2974 MW
Gen	813 MVAR
Pload	6092 MW
Qload	1335 MVAR
Int	-1948 MW
Loss	408 MW
Pres	2421 MW
Qres	3450 MVAR

MAJOR LADWP PATHS

VA-LA	1769 MW
PDCI	2780 MW
IPPDC	1148 MW

General Electric International, Inc. PSLF Program Fri Nov 16 14:32:42 2012 C:\Gus\2012TYP\2012typ-hs22-hicastaic-s-hsk2.

WESTERN ELECTRICITY COORDINATING COUNCIL 2012 HS4A APPROVED OPERATING CASE JANUARY 12, 2012	03/07/12 - 2018 DWP 1-in-10 Summer Peak	MW/MVAR Rating = 1

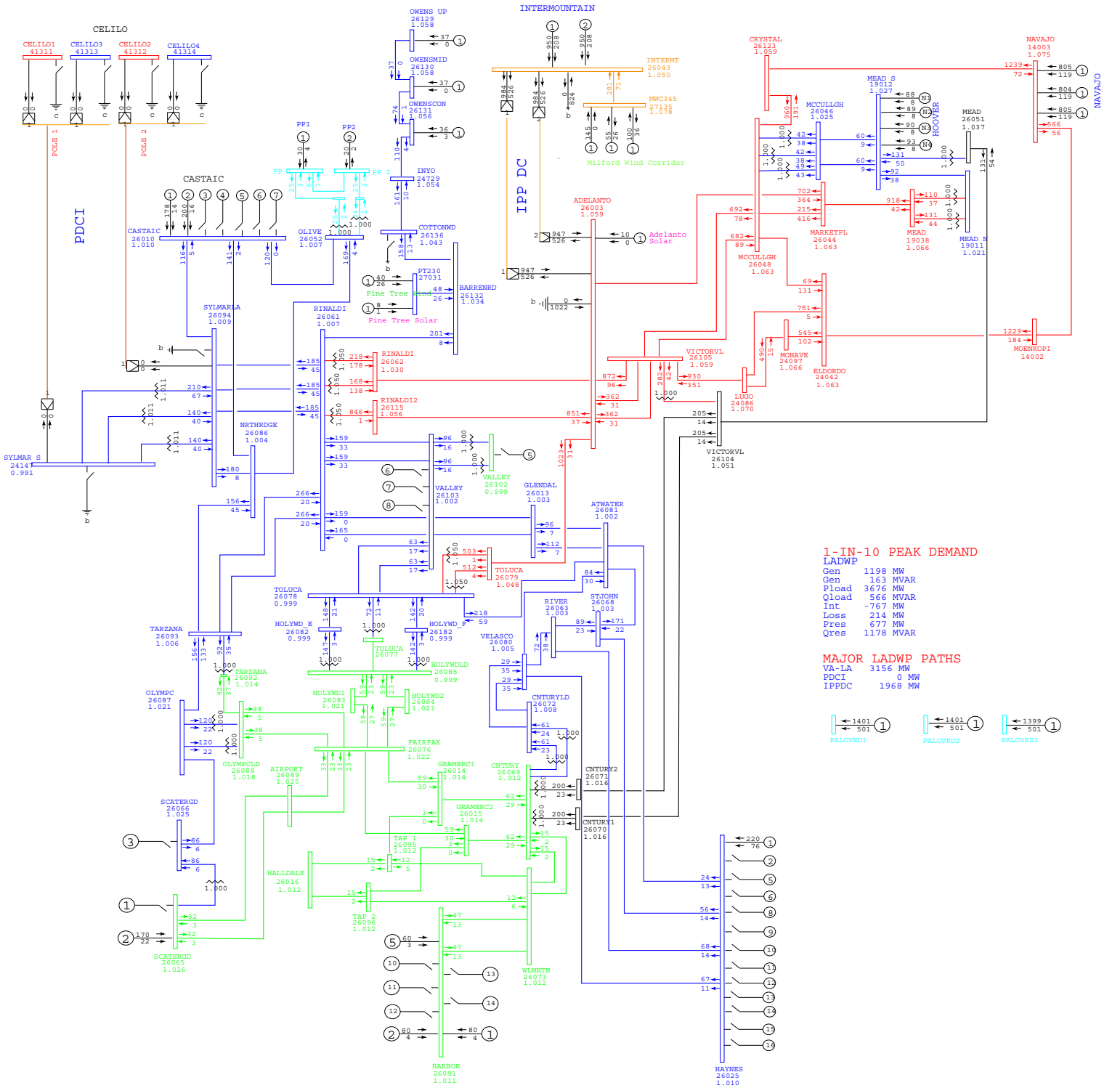

1-IN-10 PEAK DEMAND

LADWP

Gen	1198	MW
Gen	163	MVAR
Pload	3676	MW
Qload	566	MVAR
Int	-767	MW
Loss	214	MW
Pres	677	MW
Qres	1178	MVAR

MAJOR LADWP PATHS

VA-LA	3156 MW
PDCI	0 MW
IPPDC	1968 MW

General Electric International, Inc. PSLF Program Sat Nov 17 11:06:18 2012 C:\Gus\2012TYP\rev_111712_2012typ-15hw-nopdci

WESTERN ELECTRICITY COORDINATING COUNCIL 2012-13 HW2 OPERATING CASE May 24, 2012	2015 DWP Heavy Winter Load	MW/MVAR Rating = 1

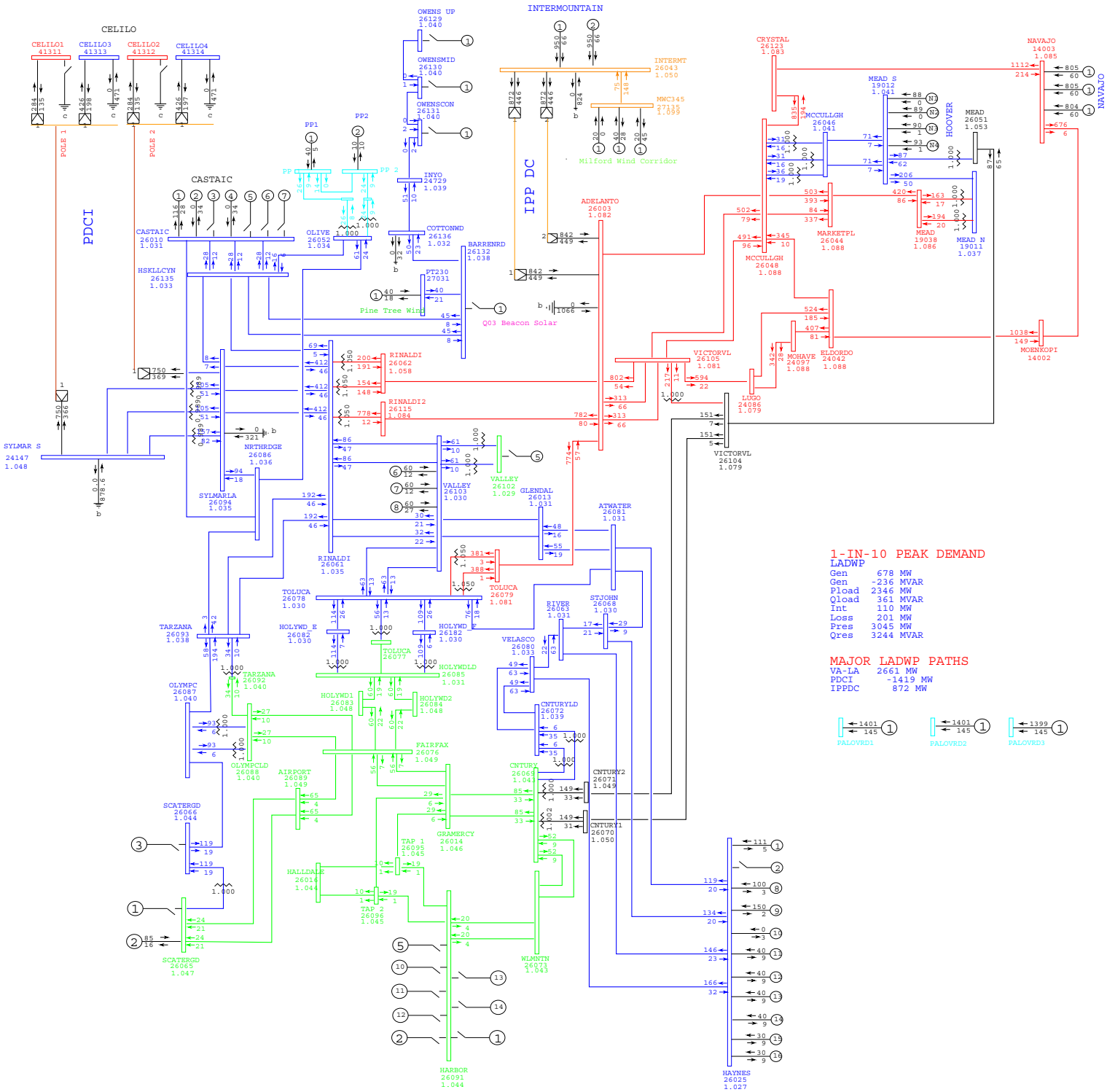

1-IN-10 PEAK DEMAND

LADWP

Gen	678	MW
Gen	-236	MVAR
Pload	2346	MW
Qload	361	MVAR
Int	110	MW
Loss	201	MW
Pres	3045	MW
Qres	3244	MVAR

MAJOR LADWP PATHS

VA-LA	2661 MW
PDCI	-1419 MW
IPPDC	872 MW

General Electric International, Inc. PSLF Program Sat Nov 17 13:04:38 2012 C:\Gus\2012TYP\rev_111712_17lw1as.sav

WESTERN ELECTRICITY COORDINATING COUNCIL

2016-17 LW1-S BASE CASE

MAY 21, 2012

MW/MVAR

Rating = 1

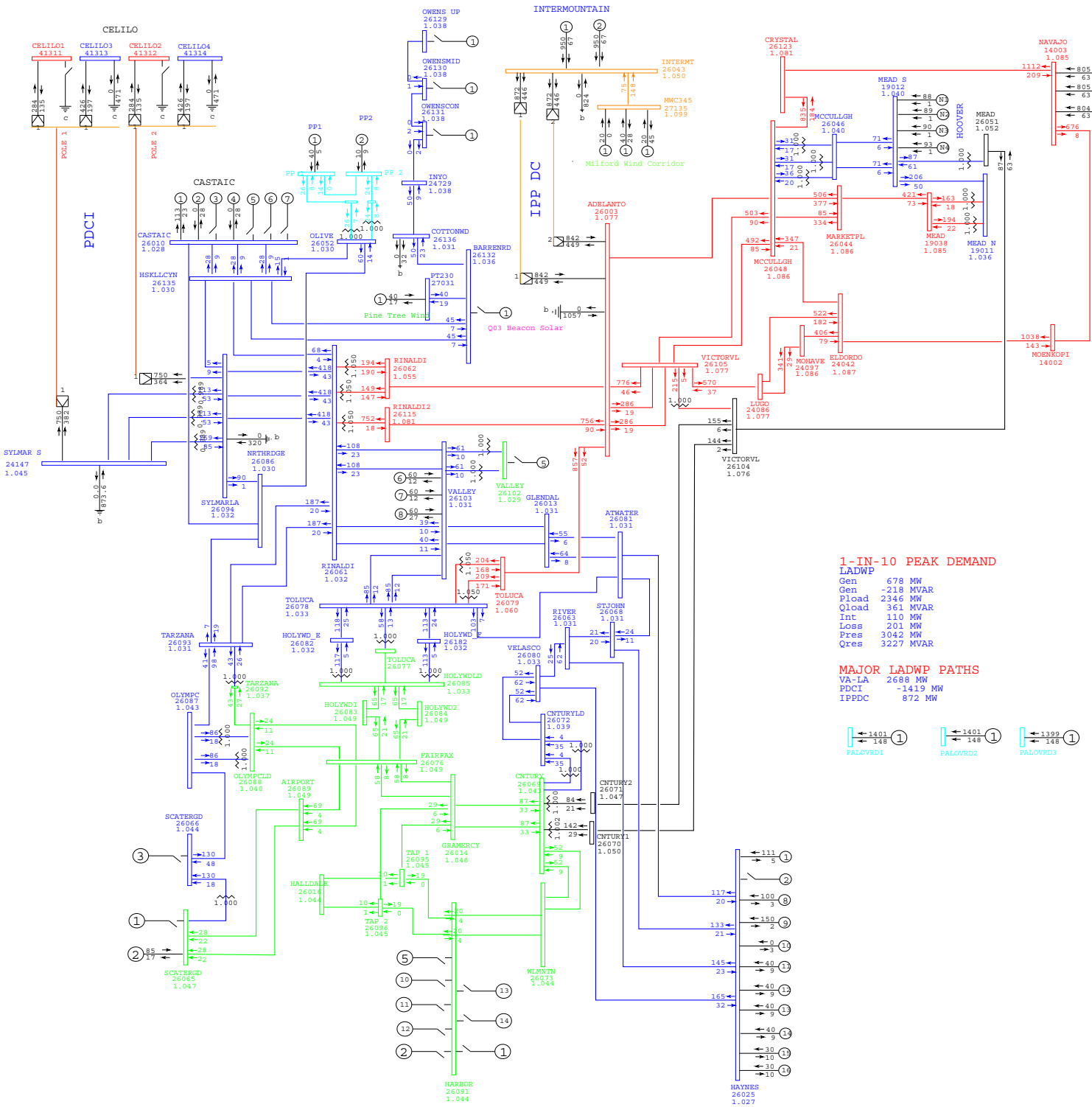

1-IN-10 PEAK DEMAND

LADWP

Gen	678	MW
Gen	-218	MVAR
Pload	2346	MW
Qload	361	MVAR
Int	110	MW
Loss	201	MW
Pres	3042	MW
Qres	3227	MVAR

MAJOR LADWP PATHS

VA-LA	2688 MW
PDCI	-1419 MW
IPPDC	872 MW

General Electric International, Inc. PSLF Program Sat Nov 17 13:09:53 2012 C:\Gus\2012TYP\2012typ-17lw-dwp-reactor.sav

WESTERN ELECTRICITY COORDINATING COUNCIL

2016-17 LW1-S BASE CASE

MAY 21, 2012

MW/MVAR

Rating = 1

Appendix F. List of Contingencies Studied

Appendix F. LIST OF CONTINGENCIES STUDIED

CONT. NO.	FROM		TO		CKT
NERC CATEGORY B CONTINGENCY					
500kV Lines					
1	26003	ADELANTO	26115	RINALDI2	1
2	26003	ADELANTO	26079	TOLUCA	1
3	26044	MARKETPL	26003	ADELANTO	1
4	26044	MARKETPL	26048	MCCULLGH	1
5	26048	MCCULLGH	26105	VICTORVL	1
6	26105	VICTORVL	26003	ADELANTO	1
7	26105	VICTORVL	24086	LUGO	1
8	26105	VICTORVL	26062	RINALDI	1
287kV Lines					
9	26051	MEAD	26104	VICTORVL	1
10	26104	VICTORVL	26070	CNTURY1	1
11	26104	VICTORVL	26071	CNTURY2	1
230kV Lines					
12	26081	ATWATER	26068	STJOHN	1
13	26081	ATWATER	26080	VELASCO	1
14	26132	BARRENRD	26905	BCON230	1
15	26132	BARRENRD	26136	COTTONWD	1
16	26132	BARRENRD	26135	HSKLLCYN	2
17	26132	BARRENRD	26135	HSKLLCYN	3
18	26132	BARRENRD	26061	RINALDI	1
19	26010	CASTAIC	26035	HSKLLCYN	1
20	26010	CASTAIC	26086	NRTHRDGE	1
21	26010	CASTAIC	26052	OLIVE	1
22	26010	CASTAIC	26094	SYLMARLA	1
23	26013	GLENDAL	26081	ATWATER	1
24	26025	HAYNES	26081	ATWATER	1
25	26025	HAYNES	26063	RIVER	1
26	26025	HAYNES	26068	STJOHN	1
27	26025	HAYNES	26080	VELASCO	1
28	27031	PT230	26132	BARRENRD	1
29	26135	HSKLLCYN	26052	OLIVE	1
30	26086	NRTHRDGE	26093	TARZANA	1
31	26052	OLIVE	26086	NRTHRDGE	1
32	26061	RINALDI	26013	GLENDAL	1
33	26061	RINALDI	26135	HSKLLCYN	1
34	26061	RINALDI	26093	TARZANA	1
35	26066	SCATERGD	26087	OLYMPC	2
36	26066	SCATERGD	26087	OLYMPC	1
37	26068	STJOHN	26063	RIVER	1
38	26094	SYLMARLA	26135	HSKLLCYN	1
39	26094	SYLMARLA	26086	NRTHRDGE	1
40	26094	SYLMARLA	26061	RINALDI	1
41	26093	TARZANA	26087	OLYMPC	3
42	26078	TOLUCA	26081	ATWATER	1
43	26078	TOLUCA	26082	HOLYWD_E	1
44	26078	TOLUCA	26182	HOLYWD_F	1
45	26103	VALLEY	26061	RINALDI	1
46	26103	VALLEY	26078	TOLUCA	1
47	26080	VELASCO	26072	CNTURYLD	1
48	24729	INYO	26136	COTTONWD	1
49	26946	OWENYOTP	26136	COTTONWD	1
50	26946	OWENYOTP	24729	INYO	1
51	26946	OWENYOTP	26998	ODLSR	1
52	26998	ODLSR	26136	COTTONWD	1
138kV Lines					
53	26069	CNTURY	26014	GRAMERC1	1
54	26069	CNTURY	26014	GRAMERCY	1
55	26069	CNTURY	26073	WLMNTN	1

Appendix F. LIST OF CONTINGENCIES STUDIED

CONT. NO.	FROM		TO		CKT
56	26076	FAIRFAX	26089	AIRPORT	1
57	26076	FAIRFAX	26014	GRAMERC1	1
58	26076	FAIRFAX	26014	GRAMERCY	1
59	26076	FAIRFAX	26088	OLYMPCLD	1
60	26091	HARBOR	26073	WLMNTN	E
61	26019	HARB	26075	WLMNTNLD	A
62	26083	HOLYWD1	26076	FAIRFAX	1
63	26083	HOLYWD1	26085	HOLYWDLD	1
64	26065	SCATERGD	26089	AIRPORT	1
65	26095	TAP1	26016	HALLDALE	1
66	26096	TAP2	26016	HALLDALE	1
67	26095	TAP1	26014	GRAMERC1	1
68	26096	TAP2	26015	GRAMERC2	1
69	26095	TAP1	26014	GRAMERCY	1
70	26096	TAP2	26014	GRAMERCY	1
71	26092	TARZANA	26088	OLYMPCLD	1
72	26077	TOLUCA	26085	HOLYWDLD	2
73	26073	WLMNTN	26095	TAP1	1
74	26073	WLMNTN	26096	TAP2	1
75	26075	WLMNTNLD	26073	WLMNTN	1
76	26075	WLMNTNLD	26019	HARB	A
Auto-transformers					
77	26070	CNTURY1	26069	CNTURY	G
78	26071	CNTURY2	26069	CNTURY	F
79	26072	CNTURYLD	26069	CNTURY	E
80	26087	OLYMPC	26088	OLYMPCLD	E
81	26066	SCATERGD	26065	SCATERGD	1
82	26105	VICTORVL	26104	VICTORVL	1
NERC CATEGORY C5 CONTINGENCY					
500kV Lines					
1	26003	ADELANTO	26115	RINALDI2	1
	26105	VICTORVL	26062	RINALDI	1
2	26048	MCCULLGH	26105	VICTORVL	1
	26048	MCCULLGH	26105	VICTORVL	2
3	26105	VICTORVL	26003	ADELANTO	1
	26105	VICTORVL	26003	ADELANTO	2
4	26003	ADELANTO	26079	TOLUCA	1
	26003	ADELANTO	26044	MARKETPL	1
5	26003	ADELANTO	26105	VICTORVL	2
	26003	ADELANTO	26115	RINALDI2	1
6	26105	VICTORVL	26003	ADELANTO	1
	26105	VICTORVL	24086	LUGO	1
7	26003	ADELANTO	26105	VICTORVL	2
	26048	MCCULLGH	26105	VICTORVL	2
8	26048	MCCULLGH	26105	VICTORVL	1
	26048	MCCULLGH	24042	ELDORDO	1
345kV Lines					
9	27135	MWC345	26043	INTERMT	1
	26043	INTERMT	65995	MONA	1
287kV Lines					
10	26104	VICTORVL	26070	CNTURY1	1
	26104	VICTORVL	26071	CNTURY2	1
230kV Lines					
11	26010	CASTAIC	26135	HSKLLCYN	1
	26010	CASTAIC	26135	HSKLLCYN	2
12	26135	HSKLLCYN	26094	SYLMARLA	1
	26135	HSKLLCYN	26010	CASTAIC	1

Appendix F. LIST OF CONTINGENCIES STUDIED

CONT. NO.	FROM		TO		CKT
13	26135	HSKLLCYN	26052	OLIVE	1
	26010	CASTAIC	26135	HSKLLCYN	2
14	26135	HSKLLCYN	26061	RINALDI	1
	26010	CASTAIC	26135	HSKLLCYN	3
15	26013	GLENDAL	26081	ATWATER	1
	26013	GLENDAL	26061	RINALDI	2
16	26013	GLENDAL	26081	ATWATER	2
	26013	GLENDAL	26061	RINALDI	1
17	26103	VALLEY	26061	RINALDI	2
	26103	VALLEY	26078	TOLUCA	2
18	26132	BARRENRD	26061	RINALDI	1
	26103	VALLEY	26061	RINALDI	1
19	26094	SYLMARLA	26061	RINALDI	3
	26061	RINALDI	26093	TARZANA	1
20	26093	TARZANA	26086	NRTHRDGE	1
	26093	TARZANA	26087	OLYMPC	3
21	26013	GLENDAL	26081	ATWATER	1
	26013	GLENDAL	26081	ATWATER	2
22	26061	RINALDI	26113	GLENDAL	1
	26061	RINALDI	26113	GLENDAL	2
23	26061	RINALDI	26093	TARZANA	1
	26061	RINALDI	26093	TARZANA	2
24	26093	TARZANA	26087	OLYMPC	3
	26092	TARZANA	26088	OLYMPCLD	1
25	26103	VALLEY	26061	RINALDI	1
	26103	VALLEY	26061	RINALDI	2
26	26103	VALLEY	26078	TOLUCA	1
	26103	VALLEY	26078	TOLUCA	2
27	26080	VELASCO	26072	CNTURYLD	1
	26080	VELASCO	26072	CNTURYLD	2
28	26068	STJOHN	26063	RIVER	1
	26063	RIVER	26631	MKT A HI	A
29	26025	HAYNES	26080	VELASCO	1
	26063	RIVER	26632	MKT B HI	B
30	26063	RIVER	26080	VELASCO	1
	26063	RIVER	26633	MKT C HI	C
138kV Lines					
31	26065	SCATERGD	26089	AIRPORT	2
	26089	AIRPORT	26076	FAIRFAX	2
32	26065	SCATERGD	26089	AIRPORT	1
	26089	AIRPORT	26076	FAIRFAX	1
33	26069	CNTURY	26014	GRAMERC1	1
	26069	CNTURY	26015	GRAMERC2	1
34	26069	CNTURY	26014	GRAMERCY	1
	26069	CNTURY	26014	GRAMERCY	2
35	26069	CNTURY	26073	WLMNTN	1
	26069	CNTURY	26073	WLMNTN	2
36	26019	HARB	26075	WLMNTNLD	A
	26019	HARB	26075	WLMNTNLD	B
37	26073	WLMNTN	26091	HARBOR	D
	26073	WLMNTN	26091	HARBOR	E
38	26076	FAIRFAX	26089	AIRPORT	1
	26076	FAIRFAX	26089	AIRPORT	2
39	26076	FAIRFAX	26014	GRAMERC1	1
	26076	FAIRFAX	26015	GRAMERC2	1
40	26076	FAIRFAX	26014	GRAMERCY	1
	26076	FAIRFAX	26014	GRAMERCY	2
41	26076	FAIRFAX	26083	HOLYWD1	1
	26076	FAIRFAX	26084	HOLYWD2	1

Appendix F. LIST OF CONTINGENCIES STUDIED

CONT. NO.	FROM		TO		CKT
42	26095	TAP 1	26014	GRAMERC1	1
	26096	TAP 2	26015	GRAMERC2	1
43	26095	TAP 1	26014	GRAMERCY	1
	26096	TAP 2	26014	GRAMERCY	1
44	26073	WLMNTN	26095	TAP 1	1
	26073	WLMNTN	26096	TAP 2	1
45	26091	HARBOR	26095	TAP 1	1
	26091	HARBOR	26096	TAP 2	1
46	26016	HALLDALE	26095	TAP 1	1
	26016	HALLDALE	26096	TAP 2	1
NERC CATEGORY C2 CONTINGENCY					
500kV Lines					
1	26003	ADELANTO	26115	RINALDI2	1
	26105	VICTORVL	26003	ADELANTO	2
2	26003	ADELANTO	26079	TOLUCA	1
	26044	MARKETPL	26003	ADELANTO	1
3	26105	VICTORVL	26003	ADELANTO	1
	24086	LUGO	26105	VICTORVL	1
4	26105	VICTORVL	26003	ADELANTO	2
	26048	MCCULLGH	26105	VICTORVL	2
5	26048	MCCULLGH	26105	VICTORVL	1
	24042	ELDORDO	26048	MCCULLGH	1
6	14003	NAVAJO	26123	CRYSTAL	1
	26123	CRYSTAL	26048	MCCULLGH	1
345kV Lines					
7	27135	MWC345	26043	INTERMT	1
	26043	INTERMT	65995	MONA	1
230kV Lines					
8	26010	SYLMARLA	26135	HSKLLCYN	1
	26010	CASTAIC	26135	HSKLLCYN	1
9	26135	HSKLLCYN	26052	OLIVE	1
	26010	CASTAIC	26135	HSKLLCYN	2
10	26135	HSKLLCYN	26061	RINALDI	1
	26010	CASTAIC	26135	HSKLLCYN	3
11	26081	ATWATER	26013	GLENDAL	1
	26061	RINALDI	26013	GLENDAL	2
12	26081	ATWATER	26013	GLENDAL	2
	26061	RINALDI	26013	GLENDAL	1
13	26103	VALLEY	26061	RINALDI	2
	26103	VALLEY	26078	TOLUCA	2
14	26094	SYLMARLA	26061	RINALDI	3
	26010	CASTAIC	26094	SYLMARLA	1
15	26094	SYLMARLA	26061	RINALDI	3
	26061	RINALDI	26093	TARZANA	1
16	26086	NRTHRDGE	26093	TARZANA	1
	26093	TARZANA	26087	OLYMPIC	3
17	26068	STJOHN	26063	RIVER	1
	26063	RIVER	26631	MKT "A"	A
18	26025	HAYNES	26063	RIVER	1
	26063	RIVER	26632	MKT "B"	B
19	26063	RIVER	26080	VELASCO	1
	26063	RIVER	26633	MKT "C"	C
20	26132	BARRENRD	26061	RINALDI	1
	24729	INYO	26132	BARRENRD	1
21	26132	BARRENRD	26061	RINALDI	1
	26103	VALLEY	26061	RINALDI	1
22	26065	SCATERGD	26089	AIRPORT	2
	26089	AIRPORT	26076	FAIRFAX	2
23	26065	SCATERGD	26089	AIRPORT	1
	26089	AIRPORT	26076	FAIRFAX	1

Appendix G. Switching Sequences for Transient and Post-Transient

SWITCHING SEQUENCES

CONTINGENCY	SEQUENCE
Adelanto-Rinaldi 500kV Line	1
Adelanto - Toluca 500 kV Line	2
Adelanto - Victorville 500 kV Line	3
Lugo-Victorville 500 kV Line	4
Victorville-Rinaldi 500 kV Line	5
McCullgh-Victorville 500 kV Line	6
Mead – Victorville 287 kV Line	7
Cottonwood-Barren Ridge 230 kV with Remedial Action Scheme (RAS)	8
Rinaldi – Barren Ridge 230 kV	9
PDCI Bipole	10
IPP DC Bipole	11
Palo Verde-g2-OL-MA-RAS	12
Adelanto-Rinaldi and Victorville-Rinadi 500kV Lines	13
McCullgh-Victorville 500 kV Lines 1 & 2	14
Victorville-Century 287 kV Lines 1 & 2	15
Rinaldi - Tarzana 230 kV Lines 1 & 2	16
Rinaldi-Glendale 230 kV Lines 1&2	17
Rinaldi-Valley 230 kV Lines 1 & 2	18
Toluca-Valley 230 kV Lines 1&2	19
Glendale-Atwater 230 kV Lines 1&2	20
Tarzana – Olympic 230kV and 138kV Lines	21
Velasco-Century 230kV Lines 1&2	22
Century - Wilmington 138 kV Lines 1&2	23
Gramercy – Fairfax 138 kV Lines 1 & 2	24
Century – Gramercy 138 kV Lines 1 & 2	25
Gramercy Tap1 & Tap2 138 kV Lines	26
Airport – Fairfax 138 kV Lines 1 & 2	27
Barren Ridge – Haskell 230kV Lines 1 & 2	28
Toluca – Hollywood Lines 1, 2 and 3	29
Rinaldi – Tarzana Lines 1 & 2 and Northridge – Tarzana Line 1	30
Rinaldi – Tarzana Lines 1 & 2 and Northridge – Tarzana Line 1 with RAS	31

Adelanto-Rinaldi 500kV Line 1

```
RUN
*   3 phase 4 cycle fault at Adelanto
*   Loss of Adelanto-Rinaldi 500kV line
*
*  CC cards for post-transient only
*
*   Fault bus at RINALDI 500 busses
FB   0.0 "RINALDI2" 500.
*
*  Temporary block all DC
*
DDC   0.0 "INT MT1R"  206. "ADELAN1I" 202.
DDC   0.0 "CELILO1 "  500. "SYLMAR1 " 230.
DDC   0.0 "CELILO2 "  500. "SYLMAR2 " 230.
*
*   Clear fault at Rinaldi
CFB  4.0 "RINALDI2" 500.
*
*   Trip Adelanto - Rinaldi  500kV line
*
DL   4.0 "ADELANTO" 500. "RINALDI2" 500. "1 "
*
*  Restart all DC
*
SDC   4.0 "INT MT1R"  206. "ADELAN1I" 202.
SDC   4.0 "CELILO1 "  500. "SYLMAR1 " 230.
SDC   4.0 "CELILO2 "  500. "SYLMAR2 " 230.
*
*  Readjust Northwest SVC's
CC  MSV  0.0 "KEEL-SVC" 230.0 "1 "  350. -300.
CC  MSV  0.0 "MV-SVC  " 230.0 "1 "  350. -300.
*
*  Add SVC's at Marketplace and Adelanto
*
CC MBS  120.0 "ADELSVC " 500. "sv" "A" 0.0 1.320
CC MBS  120.0 "MKTPSVC " 500. "sv" "A" 0.0 1.320
*
```

Adelanto - Toluca 500 kV Line 2

```
RUN
*   3 phase 4 cycle fault at Adelanto
*   Loss of Adelanto-Toluca Line
*  CC cards for post-transient only
*
*   Fault bus at Adelanto
FB   0.0 "ADELANTO" 500.
*
*  Temporary block all DC
*
DDC   0.0 "INT MT1R"  206. "ADELAN1I" 202.
```

```
DDC   0.0 "CELILO1 "  500. "SYLMAR1 " 230.
DDC   0.0 "CELILO2 "  500. "SYLMAR2 " 230.
*   Clear fault at Adelanto
CFB  4.0 "ADELANTO" 500.
*
*   Trip Adelanto - Toluca 500kV line
*
DL   4.0 "ADELANTO" 500. "TOLUCA  " 500. "1 "
*
*  Restart all DC
*
SDC   4.0 "INT MT1R"  206. "ADELAN1I" 202.
SDC   4.0 "CELILO1 "  500. "SYLMAR1 " 230.
SDC   4.0 "CELILO2 "  500. "SYLMAR2 " 230.
*
*  Readjust Northwest SVC's
* CC  MSV  0.0 "KEEL-SVC" 230.0 "1 "  350. -300.
* CC  MSV  0.0 "MV-SVC  " 230.0 "1 "  350. -300.
*
*  Add SVC's at Marketplace and Adelanto
*
CC MBS  120.0 "ADELSVC " 500. "sv" "A" 0.0 1.320
CC MBS  120.0 "MKTPSVC " 500. "sv" "A" 0.0 1.320
*
```

Adelanto - Victorville 500 kV Line 3

```
RUN
*   3 phase 4 cycle fault at Victorville
*   Loss of Adelanto-Victorville one line
*  CC cards for post-transient only
*
*   Fault bus at Victorville
FB   0.0 "VICTORVL" 500.
*
*  Temporary block all DC
*
DDC   0.0 "INT MT1R"  206. "ADELAN1I" 202.
DDC   0.0 "CELILO1 "  500. "SYLMAR1 " 230.
DDC   0.0 "CELILO2 "  500. "SYLMAR2 " 230.
*
*   Clear fault at Victorville
CFB  4.0 "VICTORVL" 500.
*
*   Trip Adelanto - Victorville line 1
*
DL   4.0 "ADELANTO" 500. "VICTORVL" 500. "1 "
*
*  Restart all DC
*
SDC   4.0 "INT MT1R"  206. "ADELAN1I" 202.
SDC   0.0 "CELILO1 "  500. "SYLMAR1 " 230.
SDC   0.0 "CELILO2 "  500. "SYLMAR2 " 230.
*
*  Readjust Northwest SVC's
```

```
CC  MSV  0.0 "KEEL-SVC" 230.0 "1 "  350. -300.
CC  MSV  0.0 "MV-SVC  " 230.0 "1 "  350. -300.
*  Add SVC's at Marketplace and Adelanto
*
*  CC  MBS  120.0 "ADELSVC " 500. "sv" "A" 0.0 1.320
*  CC  MBS  120.0 "MKTPSVC " 500. "sv" "A" 0.0 1.320
*
```

Lugo-Victorville 500 kV Line 4

```
RUN
*   3 phase 4 cycle fault at Lugo
*   Loss of Lugo-Victorville Line
*   CC cards for post-transient only
*
*   Fault bus at Lugo
FB   0.0 "LUGO    " 500.
*
*  Temporary block all DC
*
DDC   0.0 "INT MT1R"  206. "ADELAN1I" 202.
DDC   0.0 "CELILO1 "  500. "SYLMAR1 " 230.
DDC   0.0 "CELILO2 "  500. "SYLMAR2 " 230.
*
*   Clear fault at Lugo
CFB  4.0 "LUGO    " 500.
*
*   Trip Lugo - Victorville line
*
DL   4.0 "LUGO    " 500. "VICTORVL " 500. "1 "
*
*  Restart all DC
*
SDC   4.0 "INT MT1R"  206. "ADELAN1I" 202.
SDC   0.0 "CELILO1 "  500. "SYLMAR1 " 230.
SDC   0.0 "CELILO2 "  500. "SYLMAR2 " 230.
*
*  Readjust Northwest SVC's
CC  MSV  0.0 "KEEL-SVC" 230.0 "1 "  350. -300.
CC  MSV  0.0 "MV-SVC  " 230.0 "1 "  350. -300.
*
*  Add SVC's at Marketplace and Adelanto
*
CC  MBS  120.0 "ADELSVC " 500. "sv" "A" 0.0 1.320
CC  MBS  120.0 "MKTPSVC " 500. "sv" "A" 0.0 1.320
*
```

Victorville-Rinaldi 500 kV Line 5

```
RUN
*   3 phase 4 cycle fault at Adelanto
*   Loss of Victorville-Rinadi 500 kV Line
*  CC cards for post-transient only
*
*   Fault bus at RINALDI 500 busses
```

```
FB   0.0 "RINALDI " 500.
*
*  Temporary block all DC
*
DDC   0.0 "INT MT1R"  206. "ADELAN1I" 202.
DDC   0.0 "CELILO1 "  500. "SYLMAR1 " 230.
DDC   0.0 "CELILO2 "  500. "SYLMAR2 " 230.
*
*   Clear fault at Rinaldi
CFB  4.0 "RINALDI " 500.
*
*   Trip Adelanto - Rinaldi 500 kV Line
*
DL   4.0 "VICTORVL" 500. "RINALDI " 500. "1 "
*
*  Restart all DC
*
SDC   4.0 "INT MT1R"  206. "ADELAN1I" 202.
SDC   4.0 "CELILO1 "  500. "SYLMAR1 " 230.
SDC   4.0 "CELILO2 "  500. "SYLMAR2 " 230.
*
*  Readjust Northwest SVC's
CC  MSV  0.0 "KEEL-SVC" 230.0 "1 "  350. -300.
CC  MSV  0.0 "MV-SVC  " 230.0 "1 "  350. -300.
*
*
*  Add SVC's at Marketplace and Adelanto
*
CC  MBS  120.0 "ADELSVC " 500. "sv" "A" 0.0 1.320
CC  MBS  120.0 "MKTPSVC " 500. "sv" "A" 0.0 1.320
*
```

McCullgh-Victorville 500 kV Line 6

```
RUN
*   3 phase 4 cycle fault at Victorville
*   Loss of McCullgh-Victorville one line
*  CC cards for post-transient only
*
*   Fault bus at Victorville
FB   0.0 "VICTORVL" 500.
*
*  Temporary block all DC
*
DDC   0.0 "INT MT1R"  206. "ADELAN1I" 202.
DDC   0.0 "CELILO1 "  500. "SYLMAR1 " 230.
DDC   0.0 "CELILO2 "  500. "SYLMAR2 " 230.
*
*   Clear fault at Victorville
CFB  4.0 "VICTORVL" 500.
*
*   Trip McCullough - Victorville lines
*
DL   4.0 "MCCULLGH" 500. "VICTORVL" 500. "1 "
*
*  Restart all DC
```

```
*
SDC   4.0 "INT MT1R"  206. "ADELAN1I" 202.
SDC   4.0 "CELILO1 "  500. "SYLMAR1 " 230.
SDC   4.0 "CELILO2 "  500. "SYLMAR2 " 230.
*
*  Readjust Northwest SVC's
CC  MSV  0.0 "KEEL-SVC" 230.0 "1 "  350. -300.
CC  MSV  0.0 "MV-SVC  " 230.0 "1 "  350. -300.
*
*  Add SVC's at Marketplace and Adelanto
*
CC  MBS  120.0 "ADELSVC " 500. "sv" "A" 0.0 1.320
CC  MBS  120.0 "MKTPSVC " 500. "sv" "A" 0.0 1.320
*
```

Mead-Victorville 287 kV Line 7

```
RUN
*   3 phase 4 cycle fault at Mead
*   Loss of Mead-Victorville one line
*  CC cards for post-transient only
*
*   Fault bus at Mead
FB   0.0 "MEAD" 287.
*
*   Clear fault at Mead
CFB  4.0 "MEAD" 287.
*
*   Trip Mead - Victorville lines
*
DL   4.0 "MEAD" 287. "VICTORVL" 287. "1 "
*

*  Readjust Northwest SVC's
CC  MSV  0.0 "KEEL-SVC" 230.0 "1 "  350. -300.
CC  MSV  0.0 "MV-SVC  " 230.0 "1 "  350. -300.
*
*  Add SVC's at Marketplace and Adelanto
*
CC  MBS  120.0 "ADELSVC " 500. "sv" "A" 0.0 1.320
CC  MBS  120.0 "MKTPSVC " 500. "sv" "A" 0.0 1.320
*
```

Cottonwood-Barren Ridge 230 kV Line with RAS 8

```
RUN
*   Cottonwood - Barren Ridge 230kV Line Out
*   W/ RAS
*   3-phase 4 cycle fault at Barren Ridge
*
* CC  DRP 110
*
*   Fault bus at Barren Ridge 230
FB  0.0  "BARRENRD" 230.
*
*
```

```
*   Clear fault bus Barren Ridge
CFB 4.0  "BARRENRD" 230.
*
*   Trip Cottonwood - Barren Ridge
DL  4.0  "COTTONWD" 230. "BARRENRD" 230. "1 "
*
*   Trip OG Units
*
TG  8.0  "OWENS UP " 11.5  "1 "
TG  8.0  "OWENSMID " 11.5  "1 "
TG  8.0  "OWENSCON " 11.5. "1 "
*
*
* Open Inyo tie
*
DL  12.0  "INYO    " 115. "INYO PS " 115. "1 "
*
```

Barren Ridge - Rinaldi 230 kV Line 9

```
RUN
*   Barren Ridge-Rinaldi 230kV Line Out
*
*   3-phase 4 cycle fault at Barren Ridge
*
*
*   Fault bus at Barren Ridge 230
FB  0.0  "BARRENRD" 230.
*
*
*
*   Clear fault bus at BARRENRD
CFB 4.0  "BARRENRD" 230.
*
*   Trip Barren Ridge - Rinaldi
DL  4.0  "RINALDI" 230. "BARRENRD" 230. "1 "
```

PDCI Bipole 10

```
RUN
*       Loss of PDCI Bipole with North-to-South flow
*       for Multi-terminal DC Presentation
*
*   CC cards for post-transient only
*
CC  DRP 2700
*
*   Readjust Northwest SVC's
*
CC  MSV 0.0 "KEEL-SVC" 19.60 "1 "  350. -300.
CC  MSV 0.0 "MV-SVC  " 19.60 "1 "  350. -300.
*
*   Deactivate PDCI
*
DDC   0.0 "CELILO3P"  500. "SYLMAR3P" 500.
DDC   0.0 "CELILO4P"  500. "SYLMAR4P" 500.
```

```
DDC   0.0 "dc41311 "  500. "CELILO3P" 500.
DDC   0.0 "dc41313 "  500. "CELILO3P" 500.
DDC   0.0 "dc26097 "  500. "SYLMAR3P" 500.
DDC   0.0 "dc41312 "  500. "CELILO4P" 500.
DDC   0.0 "dc41314 "  500. "CELILO4P" 500.
DDC   0.0 "dc26099 "  500. "SYLMAR4P" 500.
*
*   Switching off all Sylmar Filter and Shunt Banks
*
CC  MBS  4.5 "SYLMARLA"  230.    "b "  "C" 0.0 0.00
CC  MBS  4.5 "SYLMAR S"  230.    "b "  "C" 0.0 0.00
*
CC  MSV 6.0 "DEVRSVC1" 500.0 "1 "  549. -100.
*
*   Drop filter bank capacitors at Celilo (BPA RAS does not do this anymore - 10/1/02)
*
*  MBS  120.0 "CELILO1"  500.    "b "  "C" 0.0 1.27
*  MBS  120.0 "CELILO2"  500.    "b "  "C" 0.0 1.27
*  MBS  120.0 "CELILO3"  230.    "b "  "C" 0.0 2.36
*  MBS  120.0 "CELILO4"  230.    "b "  "C" 0.0 2.36
*
*   This routine will call the FACRI (Fort Rock and Malin MSC)
*   in In-Run EPCL (facri.p) and will be done at 17.5 cycles
*
*   Insert Fort Rock series caps
CC  RC  12.6 "CAPTJACK" 500. "GRIZZLY " 500. "1 " 4
CC  RC  12.6 "GRIZZLY " 500. "MALIN   " 500. "2 " 4
CC  RC  12.6 "PONDROSA" 500. "SUMMER L" 500. "1 " 4
*
*   Remove shunt reactor from Malin bus
CC  MSV  13.4 "MALIN   " 500. "s " 0.0 0.0
CC  MBS  13.4 "MALIN   " 500. "r3" "D"
CC  MBS  13.4 "MALIN   " 500. "r4" "D"
*
*   Switch on Shunt caps at malin as part of FACRI
CC  MBS  13.4 "MALIN   " 500. "c1" "R"
CC  MBS  13.4 "MALIN   " 500. "c2" "R"
*
*   Remove reactors at Olinda
*
CC  MLS 17.5 "OLINDA  " 500. "MAXWELL " 500. "1 " 1 "D" "f "
CC  MLS 17.5 "CAPTJACK" 500. "OLINDA  " 500. "1 " 3 "D" "f "
*
*   Remove reactors at Tracy
*
CC  MLS 17.5 "MAXWELL " 500. "TRACY   " 500. "1 " 2 "D" "t "
*
*   Insert capacitors at Olinda and Tracy
*
CC  MBS   17.5 "OLINDA"   500.    "c1"  "R"
*
CC  MBS   17.5 "TRACY"    500.    "c1"  "R"
CC  MBS   17.5 "TRACY"    500.    "c2"  "R"
CC  MBS   17.5 "TRACY"    500.    "c3"  "R"
CC  MBS   17.5 "TRACY"    500.    "c4"  "R"
*
```

```
*   Switch on Table Mountain Shunt cap
*   2 x 217 caps (91 Mvar reactor modeled separately)
CC  MBS  90. "TABLE MT" 500. "c1" "R"
CC  MBS  90. "TABLE MT" 500. "c2" "R"
*
*******************************************************
*   Drop Northwest Generation (2700 MW for COI and PDCI)
*******************************************************
*
*   CHIEF J5 = 900 (100 MW X 9 Units) - check the case to ensure the MW amount !!!
TG   21.7 "CHJ 1718"   13.8 "17"
TG   21.7 "CHJ 1718"   13.8 "18"
TG   21.7 "CHJ 1920"   13.8 "19"
TG   21.7 "CHJ 1920"   13.8 "20"
TG   21.7 "CHJ 2122"   13.8 "21"
TG   21.7 "CHJ 2122"   13.8 "22"
TG   21.7 "CHJ 2324"   13.8 "23"
TG   21.7 "CHJ 2324"   13.8 "24"
TG   21.7 "CHJ 25"     13.8 "25"
* TG   21.7 "CHJ 2627"   13.8 "26"
* TG   21.7 "CHJ 2627"   13.8 "27"
*
*   CHIEF JO = 600 (75.0 MW X 8 Units)
*   TG   21.7 "CHIEF JO"    13.8 "**"
*
*   CHIEF J2 = 600 (75 MW X 8 Units)
*   TG   21.7 "CHIEF J2"    13.8 "**"
*
*   COULEE19 = 600
TG   25.9 "COULEE19 "   15.0 "**"
*
*   COULEE20 = 600
TG   25.9 "COULEE20 "   15.0 "**"
*
*   COULEE21 = 600
TG   25.9 "COULEE21"   15.0 "**"
*
*   COULEE22 = SWING BUS
*   TG   25.9 "COULEE22 "   15.0 "**"
*
*   COULEE23 = OFF-LINE
*   TG   25.9 "COULEE23 "   15.0 "**"
*
*   COULEE24 = 700
*   TG   25.9 "COULEE24 "   15.0 "**"
*
*
*  Add SVC's at Marketplace and Adelanto
*
CC  MBS  120.0 "ADELSVC " 500. "sv" "A" 0.0 1.320
CC  MBS  120.0 "MKTPSVC " 500. "sv" "A" 0.0 1.320
*
*  Remove Big Eddy 230 kV bs shunt per Jim Gronquist Email 03/10/08 at 11:36 am
*
CC  MSV  13.4 "BIGEDDY2" 230. "s " 0.0 0.0
*
```

```
*   Insert capacitors at Vaca-Dixon, Tesla, and Metcalf 230 kV buses
*
CC   MBS   90.0 "VACA-DIX"   230.    "c1"  "R"
CC   MBS   90.0 "VACA-DIX"   230.    "c2"  "R"
*
CC   MBS   90.0 "NEWARK D"   230.    "c1"  "R"
CC   MBS   90.0 "NEWARK D"   230.    "c2"  "R"
*
CC   MBS   90.0 "TESLA D "   230.    "c1"  "R"
CC   MBS   90.0 "TESLA D "   230.    "c2"  "R"
CC   MBS   90.0 "TESLA D "   230.    "c3"  "R"
CC   MBS   90.0 "TESLA D "   230.    "c4"  "R"
*
```

IPP DC Bipole 11

```
RUN
*      Loss of IPP Bipole with North-to-South flow
*
*  CC cards for post-transient only
*
CC  DRP 1900
*
*   Readjust Northwest SVC's
*
CC  MSV 0.0 "KEEL-SVC" 19.60 "1 "  350. -300.
CC  MSV 0.0 "MV-SVC  " 19.60 "1 "  350. -300.
*
*   Readjust SCE SVC's
*
MSV 0.0 "DEVRSVC1" 500.0 "1 "  400. -249.
*
*  Delete Intermountain and Adelanto buses
*
DDC  0.0 "INT MT1R"  206. "ADELAN1I" 202.
*
*  Drop filter bank capacitors at Intermountain
*
MBS  4.0 "INTERMT "  345.    "b "  "D"
*
*  Drop filter bank capacitors at Adelanto
*
MBS  4.0 "ADELANTO"  500.    "b "  "D"
*
*  Trip both units at Intermountain
*
TG  10.2 "INTERM1G "  26.0  "1 "
TG  10.2 "INTERM2G "  26.0  "2 "
*
*  Trip all wind turbines
*
TG  10.2 "WTGGE   "  0.57  "1 "
TG  10.2 "WTGCP   "  0.69  "1 "
TG  10.2 "WTGGE2  "  0.57  "1 "
*
```

```
MBS  10.2 "MWC1_35 "  34.5    "b "  "D"
MBS  10.2 "MWC2_35 "  34.5    "b "  "D"
*
*
*  Add SVC's at Marketplace and Adelanto
*
CC  MBS  120.0 "ADELSVC " 500. "sv" "A" 0.0 1.320
CC  MBS  120.0 "MKTPSVC " 500. "sv" "A" 0.0 1.320
*
```



```
RUN
*   Loss of 2 Palo Verde generators
*
*  CC cards for post-transient only
*
*  Set Generator MW Dropping
CC  DRP 2641
*
*   Readjust Northwest SVC's
*
CC  MSV 0.0 "KEEL-SVC" 19.60 "1 "  350. -300.
CC  MSV 0.0 "MV-SVC  " 19.60 "1 "  350. -300.
*   CC  RG  0.0 "DALLES 3"  13.8 "1 "  180. -270.
*
*  Trip Palo Verde units #1 and #3
*
TG   0.0 "PALOVRD1"  24. "**"
TG   0.0 "PALOVRD2"  24. "**"
*
*
*   This routine will call the FACRI (Fort Rock and Malin MSC)
*      in In-Run EPCL (facri.p)
*   Disregard timing
*
*   Insert Fort Rock series caps
CC  RC 12.6 "CAPTJACK" 500. "GRIZZLY " 500. "1 " 4
CC  RC 12.6 "GRIZZLY " 500. "MALIN   " 500. "2 " 4
CC  RC 12.6 "PONDROSA" 500. "SUMMER L" 500. "1 " 4
*
*   Switch on Shunt caps at malin as part of FACRI
CC  MBS 13.4 "MALIN   " 500. "c1" "R"
CC  MBS 13.4 "MALIN   " 500. "c2" "R"
*CC  MBS 13.4 "MALIN   " 500. "r3" "D"
*CC  MBS 13.4 "MALIN   " 500. "r4" "D"
CC  MSV 13.4 "MALIN   " 500. "s " 0.0 0.0
*
*  Load shed in the Arizona Area (2-PV RAS)
*
* Total Load Drop = 120
* 120.0 + J3.89
*
MBL   60.0   "AGUAFAPS"   69.   "AP"  "M"  -15.0  -2.72
MBL   60.0   "PAPAGOBT"   69.   "SR"  "M"  -30.0  -3.80
MBL   60.0   "SANTAN  "   69.   "SR"  "M"  -30.0  -0.10
MBL   60.0   "CORBELRS"   69.   "SR"  "M"  -15.0  -0.80
```

```
MBL   60.0   "ORME  RS"   69.   "SR"  "M"  -15.0  -0.22
MBL   60.0   "THUNDRST"   69.   "SR"  "M"  -15.0  -0.05
*
*
*   Remove reactors at Olinda
*
CC  MLS 17.5 "OLINDA"   500. "MAXWELL" 500. "1 " 1 "D" "f "
CC  MLS 17.5 "CAPTJACK" 500. "OLINDA"  500. "1 " 4 "D" "t "
*
*   Switch on Olinda Shunt cap
*
CC  MBS  17.5 "OLINDA  " 500. "c1" "R"
*
*   Switch on Table Mountain Shunt cap
*   2 x 217 caps (91 Mvar reactor modeled separately)
CC  MBS  90. "TABLE MT" 500. "c1" "R"
CC  MBS  90. "TABLE MT" 500. "c2" "R"
*
*
```

Adelanto-Rinaldi and Victorville-Rinadi 500kV Lines 13

```
RUN
*   3 phase 4 cycle fault at Adelanto
*   Loss of Adelanto-Rinaldi and Victorville-Rinadi 500kV lines
*  CC cards for post-transient only
*
*   Fault bus at RINALDI 500 busses
FB   0.0 "RINALDI " 500.
FB   0.0 "RINALDI2" 500.
*
*
*  Temporary block all DC
*
DDC   0.0 "INT MT1R"  206. "ADELAN1I" 202.
DDC   0.0 "CELILO1 "  500. "SYLMAR1 " 230.
DDC   0.0 "CELILO2 "  500. "SYLMAR2 " 230.
*
*   Clear fault at Rinaldi
CFB  4.0 "RINALDI " 500.
CFB  4.0 "RINALDI2" 500.
*
*   Trip Adelanto - Rinaldi & Victorville-Rinaldi 500kV lines
*
DL   4.0 "ADELANTO" 500. "RINALDI2" 500. "1 "
DL   4.0 "VICTORVL" 500. "RINALDI " 500. "1 "
*
*  Restart all DC
*
SDC   4.0 "INT MT1R"  206. "ADELAN1I" 202.
SDC   4.0 "CELILO1 "  500. "SYLMAR1 " 230.
SDC   4.0 "CELILO2 "  500. "SYLMAR2 " 230.
*
*
*
*  Readjust Northwest SVC's
CC  MSV  0.0 "KEEL-SVC" 230.0 "1 "  350. -300.
```

```
CC  MSV  0.0 "MV-SVC  " 230.0 "1 "  350. -300.
*
*
*  Add SVC's at Marketplace and Adelanto
*
CC MBS  120.0 "ADELSVC " 500. "sv" "A" 0.0 1.320
CC MBS  120.0 "MKTPSVC " 500. "sv" "A" 0.0 1.320
```

McCullgh-Victorville 500 kV Lines 1 & 2 14

```
RUN
*   3 phase 4 cycle fault at Victorville
*   Loss of McCullgh-Victorville two lines
*   CC cards for post-transient only
*
*   Fault bus at Victorville
FB   0.0 "VICTORVL" 500.
*
*
*  Temporary block all DC
*
DDC   0.0 "INT MT1R"  206. "ADELAN1I" 202.
DDC   0.0 "CELILO1 "  500. "SYLMAR1 " 230.
DDC   0.0 "CELILO2 "  500. "SYLMAR2 " 230.
*
*   Flash series capacitors in following 500 kV Lines
*
FC   0.0 "MARKETPL" 500. "ADELANTO" 500. "1 " 1
FC   0.0 "MOHAVE  " 500. "LUGO    " 500. "1 " 1
FC   0.0 "ELDORDO" 500.  "LUGO    " 500. "1 " 3
FC   0.0 "MCCULLGH" 500. "VICTORVL" 500. "1 " 3
FC   0.0 "MCCULLGH" 500. "VICTORVL" 500. "2 " 1
*
*   Clear fault at Victorville
CFB  4.0 "VICTORVL" 500.
*
*   Trip McCullough - Victorville lines
*
DL   4.0 "MCCULLGH" 500. "VICTORVL" 500. "1 "
DL   4.0 "MCCULLGH" 500. "VICTORVL" 500. "2 "
*
*  Restart all DC
*
SDC   4.0 "INT MT1R"  206. "ADELAN1I" 202.
SDC   4.0 "CELILO1 "  500. "SYLMAR1 " 230.
SDC   4.0 "CELILO2 "  500. "SYLMAR2 " 230.
*
*   Reinsert series capacitors in following 500 kV Lines
*
RC   4.0 "MARKETPL" 500. "ADELANTO" 500. "1 " 1
RC   8.0 "MOHAVE  " 500. "LUGO    " 500. "1 " 1
RC   8.0 "ELDORDO" 500.  "LUGO    " 500. "1 " 3
RC   8.0 "MCCULLGH" 500. "VICTORVL" 500. "1 " 1
RC   8.0 "MCCULLGH" 500. "VICTORVL" 500. "1 " 3
RC   8.0 "MCCULLGH" 500. "VICTORVL" 500. "2 " 1
```

```
RC   8.0 "MCCULLGH" 500. "VICTORVL" 500. "2 " 3
*
*  Readjust Northwest SVC's
CC  MSV  0.0 "KEEL-SVC" 230.0 "1 "  350. -300.
CC  MSV  0.0 "MV-SVC  " 230.0 "1 "  350. -300.
*
*  Add SVC's at Marketplace and Adelanto
*
CC  MBS  120.0 "ADELSVC " 500. "sv" "A" 0.0 1.320
CC  MBS  120.0 "MKTPSVC " 500. "sv" "A" 0.0 1.320
*
```

Victorville – Century 287 kV Lines 1 & 2 15

```
RUN
*   3 phase 4 cycle fault at Victorville
*   Loss of McCullgh-Victorville two lines
*  No SC bypass
*  CC cards for post-transient only
*
*   Fault bus at Victorville
FB   0.0 "VICTORVL" 287.
*
*
*   Clear fault at Victorville
CFB  4.0 "VICTORVL" 287.
*
*   Trip VICTORVL - CENTURY 287 lines
*
DL   4.0 "VICTORVL" 287. "CNTURY1 " 287. "1 "
DL   4.0 "VICTORVL" 287. "CNTURY2 " 287. "1 "
*
*  Readjust Northwest SVC's
CC  MSV  0.0 "KEEL-SVC" 230.0 "1 "  350. -300.
CC  MSV  0.0 "MV-SVC  " 230.0 "1 "  350. -300.
*   CC  MSV  0.0 "DALLES 3"  13.8 "1 "  180. -270.
*
*  Add SVC's at Marketplace and Adelanto
*
CC  MBS  120.0 "ADELSVC " 500. "sv" "A" 0.0 1.320
CC  MBS  120.0 "MKTPSVC " 500. "sv" "A" 0.0 1.320
```

Rinaldi - Tarzana 230 kV Lines 1 & 2 16

```
RUN
*   Loss of Rinaldi-Tarzana two lines
*   Fault bus at Rinaldi 230
FB   0.0 "RINALDI" 230.
*
*  Temporary block all DC
*
DDC   0.0 "INT MT1R"  206. "ADELAN1I" 202.
DDC   0.0 "CELILO1 "  500. "SYLMAR1 " 230.
DDC   0.0 "CELILO2 "  500. "SYLMAR2 " 230.
*
*   Clear fault at Adelanto
```

```
CFB  4.0 "RINALDI" 230.
*
*  Restart all DC
*
SDC   4.0 "INT MT1R"  206. "ADELAN1I" 202.
SDC   4.0 "CELILO1 "  500. "SYLMAR1 " 230.
SDC   4.0 "CELILO2 "  500. "SYLMAR2 " 230.
*
*   Trip Rinaldi - Tarzana lines
*
DL   0.0 "RINALDI " 230. "TARZANA " 230. "1 "
DL   0.0 "RINALDI " 230. "TARZANA " 230. "2 "
```

Rinaldi-Glendale 230 kV Lines 1&2 17

```
RUN
*   Loss of Rinaldi-Glendale two lines
*   Fault bus at Rinaldi 230
FB   0.0 "RINALDI" 230.
*
*  Temporary block all DC
*
DDC   0.0 "INT MT1R"  206. "ADELAN1I" 202.
DDC   0.0 "CELILO1 "  500. "SYLMAR1 " 230.
DDC   0.0 "CELILO2 "  500. "SYLMAR2 " 230.
*
*   Clear fault at Adelanto
CFB  4.0 "RINALDI" 230.
*
*  Restart all DC
*
SDC   4.0 "INT MT1R"  206. "ADELAN1I" 202.
SDC   4.0 "CELILO1 "  500. "SYLMAR1 " 230.
SDC   4.0 "CELILO2 "  500. "SYLMAR2 " 230.
*
*   Trip Rinaldi - Tarzana lines
*
DL   0.0 "RINALDI " 230. "GLENDAL " 230. "1 "
DL   0.0 "RINALDI " 230. "GLENDAL " 230. "2 "
*
```

Rinaldi-Valley 230 kV Lines 1 & 2 18

```
RUN
*   Loss of Rinaldi-Valley two lines
*
*   Fault bus at Rinaldi 230
FB   0.0 "RINALDI  " 230.
*
*  Temporary block all DC
*
DDC   0.0 "INT MT1R"  206. "ADELAN1I" 202.
DDC   0.0 "CELILO1 "  500. "SYLMAR1 " 230.
DDC   0.0 "CELILO2 "  500. "SYLMAR2 " 230.
*
```

```
*   Clear fault at RINALDI
CFB  4.0 "RINALDI  " 230.
*
*  Restart all DC
*
SDC   4.0 "INT MT1R"  206. "ADELAN1I" 202.
SDC   4.0 "CELILO1 "  500. "SYLMAR1 " 230.
SDC   4.0 "CELILO2 "  500. "SYLMAR2 " 230.
*
*   Trip Rinaldi - Valley lines
*
DL   0.0 "RINALDI " 230. "VALLEY  " 230. "1 "
DL   0.0 "RINALDI " 230. "VALLEY  " 230. "2 "
```

Toluca-Valley 230 kV Lines 1&2 19

```
RUN
*   Loss of Valley-Toluca two lines
*
*   Fault bus at Toluca 230
FB   0.0 "TOLUCA  " 230.
*
*
*  Temporary block all DC
*
DDC   0.0 "INT MT1R"  206. "ADELAN1I" 202.
DDC   0.0 "CELILO1 "  500. "SYLMAR1 " 230.
DDC   0.0 "CELILO2 "  500. "SYLMAR2 " 230.
*
*
*   Clear fault at Toluca
CFB  4.0 "TOLUCA   " 230.
*
*  Restart all DC
*
SDC   4.0 "INT MT1R"  206. "ADELAN1I" 202.
SDC   4.0 "CELILO1 "  500. "SYLMAR1 " 230.
SDC   4.0 "CELILO2 "  500. "SYLMAR2 " 230.
*
*   Trip Rinaldi - Tarzana lines
*
DL   0.0 "TOLUCA  " 230. "VALLEY  " 230. "1 "
DL   0.0 "TOLUCA  " 230. "VALLEY  " 230. "2 "
*
```

Glendale-Atwater 230 kV Lines 1&2 20

```
RUN
*   Loss of Glendale-Atwater two lines
*
*   Fault bus at Glendale 230
FB   0.0 "GLENDAL " 230.
*
*   Clear fault at Glendale 230
CFB  4.0 "GLENDAL" 230.
```

```
*
*   Trip Rinaldi - Tarzana lines
*
DL   0.0 "ATWATER " 230. "GLENDAL " 230. "1 "
DL   0.0 "ATWATER " 230. "GLENDAL " 230. "2 "
*
```

Tarzana-Olympic 230 kV and 138k V Lines 21

```
RUN
*   Loss of Tarzana-Olympic two lines
*
*   Fault bus at TARZANA 230
FB   0.0 "TARZANA" 230.
*
*
*   Clear fault at TARZANA 230
CFB  4.0 "TARZANA" 230.
*
*   Trip Tarzana-Olympic lines
*
DL   0.0 "TARZANA" 230. "OLYMPC   " 230. "1 "
DL   0.0 "TARZANA" 138. "OLYMPLD  " 138. "1 "
*
```

Velasco-Century 230kV Lines 1&2 22

```
RUN
*   Loss of Velasco-Century two lines
*
*   Fault bus at Velasco 230
FB   0.0 "VELASCO " 230.
*
*   Clear fault at Glendale 230
CFB  4.0 "VELASCO " 230.
*
*   Trip Rinaldi - Tarzana lines
*
DL   0.0 "VELASCO " 230. "CNTURYLD" 230. "1 "
DL   0.0 "VELASCO " 230. "CNTURYLD" 230. "2 "
```

Century - Wilmington 138kV Lines 1 & 2 23

```
RUN
*   Loss of CNTURY - WILMINGTON two lines
*
*   Fault bus at CNTURY 138
FB   0.0 "CNTURY  " 138.
*
*   Clear fault at Glendale 230
CFB  4.0 "CNTURY  " 138.
*
*   Trip Rinaldi - Tarzana lines
*
DL   0.0 "CNTURY  " 138. "WILMNTN " 138. "1 "
DL   0.0 "CNTURY  " 138. "WILMNTN " 138. "2 "
*
```

Gramercy-Fairfax 138kV Lines 1 &2 24

```
RUN
*   Loss of GRAMERCY - FAIRFAX two lines
*
*   Fault bus at GRAMERCY 138
FB   0.0 "GRAMERCY" 138.
*
*   Clear fault at GRAMERCY 230
CFB  4.0 "GRAMERCY" 138.
*
*   Trip Gramercy - Fairfax lines
*
DL   0.0 "GRAMERCY" 138. "FAIRFAX" 138. "1 "
DL   0.0 "GRAMERCY" 138. "FAIRFAX" 138. "2 "
*
```

Century-Gramercy 138kV Lines 1 &2 25

```
RUN
*   Loss of CNTURY - GRAMERCY two lines
*  CC cards for post-transient only
*
*   Fault bus at CNTURY 138
FB   0.0 "CNTURY  " 138.
*
*   Clear fault at CNTURY 230
CFB  4.0 "CNTURY  " 138.
*
*   Trip Century - Gramercy lines
*
DL   0.0 "CNTURY  " 138. "GRAMERCY" 138. "1 "
DL   0.0 "CNTURY  " 138. "GRAMERCY" 138. "2 "
*
```

Gramercy – Tap1 & Tap2 138 kV Lines 26

```
RUN
*   Loss of GRAMERCY - TAP two lines
*  CC cards for post-transient only
*
*   Fault bus at GRAMERCY 138
FB   0.0 "GRAMERCY" 138.
*
*   Clear fault at GRAMERCY 230
CFB  4.0 "GRAMERCY" 138.
*
*   Trip Gramercy – Tap lines
*
DL   0.0 "GRAMERCY" 138. "TAP1    " 138. "1 "
DL   0.0 "GRAMERCY" 138. "TAP2    " 138. "2 "
```

Airport – Fairfax 138 kV Lines 27

```
RUN
*   Loss of AIRPORT - FAIRFAX two lines
*   Fault bus at AIRPORT 138
*
FB   0.0 "AIRPORT" 138.
*
*
*   Clear fault at AIRPORT 230
CFB  4.0 "AIRPORT" 138.
*
*   Trip Airport - Fairfax lines
*
DL   0.0 "AIRPORT" 138. "FAIRFAX" 138. "1 "
DL   0.0 "AIRPORT" 138. "FAIRFAX" 138. "2 "
*
```

Barren Ridge–Haskell 230 kV Lines 1&2 28

```
RUN
*   Loss of BARRENRD-HASKELL two lines
*  CC cards for post-transient only
*
*   Fault bus at BARRENRD 230
FB   0.0 "BARRENRD" 230.
*
*   Clear fault at
CFB  4.0 "BARRENRD" 230.
*
*   Trip BARRENRD - HSKLLCYN lines
*
DL   4.0 "BARRENRD" 230. "HSKLLCYN" 230. "1 "
DL   4.0 "BARRENRD" 230. "KSKLLCYN" 230. "2 "
*
*
* Trip Pinetree Wind, Solar and Beacon
TG  8.0  "PTWTG   " 0.57  "**"
TG  8.0  "PCWTG   " 0.57  "**"
TG  8.0  "PTSOL   " 0.48  "**"
TG  8.0  "BEACONPV" 0.29  "**"
*
DL  8.0  "BEACONTP" 230. "BARRENRD" 230. "1 "
DL  8.0  "PT230   " 230. "BARRENRD" 230. "1 "
*
*   Trip OWENYO and ODLSR
*
TG  12.0  "OWENYO_S" 0.48  "**"
TG  12.0  "OLDSR   " 0.48  "**"
*
```

Toluca– Hollywood Lines 1, 2, and 3 29

```
RUN
*   Loss of Toluca - Holywood triple towers
*  CC cards for post-transient only
```

```
*
*
*   Trip Toluca - Holywood lines
*
DL   0.0 "TOLUCA  " 230. "HOLYWD_E" 230. "1 "
DL   0.0 "TOLUCA  " 230. "HOLYWD_F" 230. "3 "
DL   0.0 "TOLUCA  " 138. "HOLYWDLD" 230. "2 "
*
```

Rinaldi–Tarzana Lines 1 & 2 and Northridge-Tarzana Line 1 30

```
RUN
*   Loss of Northridge-Tarzana tripple tower
*  CC cards for post-transient only
*
*   Trip Rinaldi/Northridge - Tarzana lines
*
DL   0.0 "RINALDI " 230. "TARZANA " 230. "1 "
DL   0.0 "RINALDI " 230. "TARZANA " 230. "2 "
DL   0.0 "NRTHRDGE" 230. "TARZANA " 230. "1 "
*
```

Rinaldi–Tarzana Lines 1 & 2 and Northridge-Tarzana Line with load shed 31

```
RUN
*   Loss of Northridge-Tarzana tripple tower w/ load shed @ CAN
*  CC cards for post-transient only
*
*   Trip Rinaldi/Northridge - Tarzana lines
*
DL   0.0 "RINALDI " 230. "TARZANA " 230. "1 "
DL   0.0 "RINALDI " 230. "TARZANA " 230. "2 "
DL   0.0 "NRTHRDGE" 230. "TARZANA " 230. "1 "
*
*
*  Drop Canoga  Load
*
MBL  0.0 "CAN  A M "  34.5 "A" "D"
MBL  0.0 "CAN  B M "  34.5 "B" "D"
MBL  0.0 "CAN  C M "  34.5 "C" "D"
*
*  Add SVC's at Marketplace and Adelanto
*
CC  MBS  120.0 "ADELSVC " 500. "sv" "A" 0.0 1.320
CC  MBS  120.0 "MKTPSVC " 500. "sv" "A" 0.0 1.320
*
```

Appendix H. Power Flow Results

2012 TEN-YEAR PLAN
CONTINGENCY ANALYSES RESULTS

CONT. NO.	OUTAGE ELEMENT	IMPACTED ELEMENT	BASECASE								
				HS 2018				HS 2022			
			HS13	HS18	High Castaic	High Castaic - So HC	High VIC-LA	HS22	High Castaic - So HC	LW17	HW15
(N-0) CONTINGENCY											
		RINALDI - GLENDAL 230kV Line 2			93%	93%					
		ADELANTO - TOLUCA 500kV Line 1					95%				
(N-1) CONTINGENCY											
500kV Lines											
1	26003 ADELANTO 26115 RINALDI2 1	ADELANTO - TOLUCA 500kV Line 1									
2	26003 ADELANTO 26079 TOLUCA 1	VALLEY - RINALDI 230kV Line 1			92%	93%		95%	94%		
		VALLEY - RINALDI 230kV Line 2			92%	93%		95%	94%		
		VALLEY - TOLUCA 230kV Line 1			92%	92%		93%	92%		
		VALLEY - TOLUCA 230kV Line 2			92%	92%		93%	92%		
		VICTORVL 500/287kV Xfmr 1					91%				
3	26044 MARKETPL 26003 ADELANTO 1										
4	26044 MARKETPL 26048 MCCULLGH 1										
5	26048 MCCULLGH 26105 VICTORVL 1										
6	26105 VICTORVL 26003 ADELANTO 1										
7	26105 VICTORVL 24086 LUGO 1										
8	26105 VICTORVL 26062 RINALDI 1										
9	14003 NAVAJO 26123 CRYSTAL 1										
10	26048 MCCULLGH 24042 ELDORADO 1										
11	26123 CRYSTAL 26048 MCCULLGH 1										
287kV Lines											
12	26051 MEAD 26104 VICTORVL 1										
13	26104 VICTORVL 26070 CNTURY1 1										
14	26104 VICTORVL 26071 CNTURY2 1										
230kV Lines											
15	26081 ATWATER 26068 STJOHN 1										
16	26081 ATWATER 26080 VELASCO 1										
17	26132 BARRENRD 27031 PT230 1										
18	26132 BARRENRD 26905 BCON230 1										
19	26132 BARRENRD 26962 RE-BR1 1										

2012 TEN-YEAR PLAN
CONTINGENCY ANALYSES RESULTS

CONT. NO.	OUTAGE ELEMENT	IMPACTED ELEMENT	BASECASE								
				HS 2018				HS 2022			
			HS13	HS18	High Castaic	High Castaic - So HC	High VIC-LA	HS22	High Castaic - So HC	LW17	HW15
20	26132 BARRENRD 26061 RINALDI 1										
21	26132 BARRENRD 26135 HSKLLCYN 2										
22	26132 BARRENRD 26135 HSKLLCYN 3										
23	26010 CASTAIC 26035 HSKLLCYN 1										
24	26010 CASTAIC 26086 NRTHRDGE 1										
25	26010 CASTAIC 26052 OLIVE 1										
26	26010 CASTAIC 26094 SYLMARLA 1										
27	26013 GLENDAL 26081 ATWATER 1										
28	26025 HAYNES 26081 ATWATER 1										
29	26025 HAYNES 26063 RIVER 1										
30	26025 HAYNES 26068 STJOHN 1										
31	26025 HAYNES 26080 VELASCO 1										
32	26135 HSKLLCYN 26052 OLIVE 1										
33	26086 NRTHRDGE 26093 TARZANA 1										
34	26052 OLIVE 26086 NRTHRDGE 1										
35	26061 RINALDI 26013 GLENDAL 1	RINALDI - GLENDAL 230kV Line 2			91%	91%					
36	26061 RINALDI 26135 HSKLLCYN 1	SYLMARLA - HSKLLCYN 230kV Line 1			101%						
37	26061 RINALDI 26093 TARZANA 1										
38	26066 SCATERGD 26087 OLYMPC 2	SCATERGD - AIRPORT 138kV Line 1	96%								
		SCATERGD - AIRPORT 138kV Line 2	96%								
39	26066 SCATERGD 26087 OLYMPC 1										
40	26068 STJOHN 26063 RIVER 1										
41	26094 SYLMARLA 26135 HSKLLCYN 1	HSKLLCYN - RINALDI 230kV Line 1			94%						
42	26094 SYLMARLA 26086 NRTHRDGE 1										
43	26094 SYLMARLA 26061 RINALDI 1										
44	26093 TARZANA 26087 OLYMPC 3	TARZANA 230/138kV Xfmr 1			94%	93%			91%		
45	26078 TOLUCA 26081 ATWATER 1										
46	26078 TOLUCA 26082 HOLYWD_E 1										
47	26078 TOLUCA 26182 HOLYWD_F 1										
48	26103 VALLEY 26061 RINALDI 1	VALLEY - RINALDI 230kV Line 2			97%	97%			98%		

2012 TEN-YEAR PLAN
CONTINGENCY ANALYSES RESULTS

CONT. NO.	OUTAGE ELEMENT	IMPACTED ELEMENT	BASECASE								
				HS 2018				HS 2022			
			HS13	HS18	High Castaic	High Castaic - So HC	High VIC-LA	HS22	High Castaic - So HC	LW17	HW15
49	26103 VALLEY 26078 TOLUCA 1	VALLEY - TOLUCA 230kV Line 2			97%				97%		
50	26080 VELASCO 26072 CNTURYLD 1										
138kV Lines											
51	26069 CNTURY 26014 GRAMERC1 1										
52	26069 CNTURY 26014 GRAMERCY 1										
53	26069 CNTURY 26073 WLMNTN 1										
54	26076 FAIRFAX 26089 AIRPORT 1	`									
55	26076 FAIRFAX 26014 GRAMERC1 1										
56	26076 FAIRFAX 26014 GRAMERCY 1										
57	26076 FAIRFAX 26088 OLYMPCLD 1										
58	26091 HARBOR 26073 WLMNTN E										
59	26019 HARB 26075 WLMNTNLD A										
60	26083 HOLYWD1 26076 FAIRFAX 1										
61	26083 HOLYWD1 26085 HOLYWDLD 1										
62	26065 SCATERGD 26089 AIRPORT 1	SCATERGD - AIRPORT 138kV Line 2							91%		
63	26095 TAP1 26016 HALLDALE 1										
64	26096 TAP2 26016 HALLDALE 1										
65	26095 TAP1 26014 GRAMERC1 1										
66	26096 TAP2 26015 GRAMERC2 1										
67	26095 TAP1 26014 GRAMERCY 1										
68	26096 TAP2 26014 GRAMERCY 1										
69	26092 TARZANA 26088 OLYMPCLD 1										
70	26077 TOLUCA 26085 HOLYWDLD 2										
71	26073 WLMNTN 26095 TAP1 1										
72	26073 WLMNTN 26096 TAP2 1										
73	26075 WLMNTNLD 26073 WLMNTN 1										
74	26075 WLMNTNLD 26019 HARB A										
Auto-Transformers											
75	26070 CNTURY1 26069 CNTURY G										
76	26071 CNTURY2 26069 CNTURY F										

2012 TEN-YEAR PLAN
CONTINGENCY ANALYSES RESULTS

CONT. NO.	OUTAGE ELEMENT	IMPACTED ELEMENT	BASECASE								
				HS 2018				HS 2022			
			HS13	HS18	High Castaic	High Castaic - So HC	High VIC-LA	HS22	High Castaic - So HC	LW17	HW15
77	26072 CNTURYLD 26069 CNTURY E										
78	26087 OLYMPC 26088 OLYMPCLD E										
79	26066 SCATERGD 26065 SCATERGD 1	SCATERGD - OLYMPC 230kV Line 2	110%								
80	26105 VICTORVL 26104 VICTORVL 1										
(N-2) CONTINGENCY											
500kV Lines											
1	26003 ADELANTO 26115 RINALDI2 1	ADELANTO - TOLUCA 500kV Line 1					91%				
	26105 VICTORVL 26062 RINALDI 1	VICTORVL 500/287kV Xfmr 1					100%				
2	26048 MCCULLGH 26105 VICTORVL 1										
	26048 MCCULLGH 26105 VICTORVL 2										
3	26105 VICTORVL 26003 ADELANTO 1										
	26105 VICTORVL 26003 ADELANTO 2										
4	26003 ADELANTO 26079 TOLUCA 1	VALLEY - RINALDI 230kV Line 1			93%	93%		95%	94%		
	26003 ADELANTO 26044 MARKETPL 1	VALLEY - RINALDI 230kV Line 2			93%	93%		95%	94%		
		VALLEY - TOLUCA 230kV Line 1			92%	92%		93%	92%		
		VALLEY - TOLUCA 230kV Line 2			92%	92%		93%	92%		
5	26003 ADELANTO 26105 VICTORVL 2	ADELANTO - TOLUCA 500kV Line 1									
	26003 ADELANTO 26115 RINALDI2 1										
6	26105 VICTORVL 26003 ADELANTO 1	ADELANTO - TOLUCA 500kV Line 1									
	26105 VICTORVL 24086 LUGO 1										
7	26003 ADELANTO 26105 VICTORVL 2										
	26048 MCCULLGH 26105 VICTORVL 2										
8	26048 MCCULLGH 26105 VICTORVL 1										
	26048 MCCULLGH 24042 ELDORDO 1										
345kV Lines											
9	27135 MWC345 26043 INTERMT 1										
	26043 INTERMT 65995 MONA 1										
287kV Lines											
10	26104 VICTORVL 26070 CNTURY1 1	ADELANTO - TOLUCA 500kV Line 1									
	26104 VICTORVL 26071 CNTURY2 1										

2012 TEN-YEAR PLAN
CONTINGENCY ANALYSES RESULTS

CONT. NO.	OUTAGE ELEMENT	IMPACTED ELEMENT	BASECASE								
				HS 2018				HS 2022			
			HS13	HS18	High Castaic	High Castaic - So HC	High VIC-LA	HS22	High Castaic - So HC	LW17	HW15
230kV Lines											
11	26010 CASTAIC 26135 HSKLLCYN 1 26010 CASTAIC 26135 HSKLLCYN 2	CASTAIC - HSKLLCYN 230kV Line3			94%						
12	26135 HSKLLCYN 26094 SYLMARLA 1 26135 HSKLLCYN 26010 CASTAIC 1	HSKLLCYN - RINALDI 230kV Line 1			93%						
13	26135 HSKLLCYN 26052 OLIVE 1 26010 CASTAIC 26135 HSKLLCYN 2										
14	26135 HSKLLCYN 26061 RINALDI 1 26010 CASTAIC 26135 HSKLLCYN 3	HSKLLCYN - SYLMARLA 230kV Line 1			100%						
15	26013 GLENDAL 26081 ATWATER 1 26013 GLENDAL 26061 RINALDI 2										
16	26013 GLENDAL 26081 ATWATER 2 26013 GLENDAL 26061 RINALDI 1										
17	26103 VALLEY 26061 RINALDI 2 26103 VALLEY 26078 TOLUCA 2										
18	26132 BARRENRD 26061 RINALDI 1 26103 VALLEY 26061 RINALDI 1	VALLEY - RINALDI 230kV Line 2			97%	97%			98%		
19	26094 SYLMARLA 26061 RINALDI 3 26061 RINALDI 26093 TARZANA 1	RINALDI - TARZANA 230kV Line 2									
20	26093 TARZANA 26086 NRTHRDGE 1 26093 TARZANA 26087 OLYMPC 3	SCATERGD - OLYMPC 230kV Line 2	91%								
21	26013 GLENDAL 26081 ATWATER 1 26013 GLENDAL 26081 ATWATER 2										
22	26061 RINALDI 26113 GLENDAL 1 26061 RINALDI 26113 GLENDAL 2	VALLEY - RINALDI 230kV Line 1			97%	97%			96%		
		VALLEY - RINALDI 230kV Line 2			97%	97%			96%		
		VALLEY - TOLUCA 230kV Line 1			95%	95%			93%		
		VALLEY - TOLUCA 230kV Line 2			95%	95%			93%		
23	26061 RINALDI 26093 TARZANA 1 26061 RINALDI 26093 TARZANA 2	SYLMARLA - NRTHRDGE 230kV Line 1	97%								
		SCATERGD - OLYMPC 230kV Line 2	107%								
		NRTHRDGE - TARZANA 230kV Line 1	101%		99%	97%		96%	100%		

2012 TEN-YEAR PLAN
CONTINGENCY ANALYSES RESULTS

CONT. NO.	OUTAGE ELEMENT	IMPACTED ELEMENT	BASECASE								
				HS 2018				HS 2022			
			HS13	HS18	High Castaic	High Castaic - So HC	High VIC-LA	HS22	High Castaic - So HC	LW17	HW15
24	26093 TARZANA 26087 OLYMPC 3 26092 TARZANA 26088 OLYMPCLD 1	SCATERGD - OLYMPC 230kV Line 2 HOLYWDLD - HOLYWD1 138kV Line 1 HOLYWDLD - HOLYWD2 138kV Line 1	120%		 91% 91%	 91% 91%					
25	26103 VALLEY 26061 RINALDI 1 26103 VALLEY 26061 RINALDI 2	RINALDI - GLENDAL 230kV Line 1 RINALDI - GLENDAL 230kV Line 2			96% 100%	96% 100%			94% 97%		
26	26103 VALLEY 26078 TOLUCA 1 26103 VALLEY 26078 TOLUCA 2	RINALDI - GLENDAL 230kV Line 1 RINALDI - GLENDAL 230kV Line 2			96% 99%	96% 99%			93% 96%		
27	26080 VELASCO 26072 CNTURYLD 1 26080 VELASCO 26072 CNTURYLD 2										
28	26068 STJOHN 26063 RIVER 1 26063 RIVER 26631 MKT A HI A										
29	26025 HAYNES 26080 VELASCO 1 26063 RIVER 26632 MKT B HI B										
30	26063 RIVER 26080 VELASCO 1 26063 RIVER 26633 MKT C HI C										
138kV Lines											
31	26065 SCATERGD 26089 AIRPORT 2 26089 AIRPORT 26076 FAIRFAX 2	SCATERGD - AIRPORT 138kV Line 1							90%		
32	26065 SCATERGD 26089 AIRPORT 1 26089 AIRPORT 26076 FAIRFAX 1	SCATERGD - AIRPORT 138kV Line 2							90%		
33	26069 CNTURY 26014 GRAMERC1 1 26069 CNTURY 26015 GRAMERC2 1										
34	26069 CNTURY 26014 GRAMERCY 1 26069 CNTURY 26014 GRAMERCY 2										
35	26069 CNTURY 26073 WLMNTN 1 26069 CNTURY 26073 WLMNTN 2										
36	26019 HARB 26075 WLMNTNLD A 26019 HARB 26075 WLMNTNLD B										
37	26073 WLMNTN 26091 HARBOR D 26073 WLMNTN 26091 HARBOR E										

2012 TEN-YEAR PLAN
CONTINGENCY ANALYSES RESULTS

CONT. NO.	OUTAGE ELEMENT	IMPACTED ELEMENT	BASECASE								
				HS 2018				HS 2022			
			HS13	HS18	High Castaic	High Castaic - So HC	High VIC-LA	HS22	High Castaic - So HC	LW17	HW15
38	26076 FAIRFAX 26089 AIRPORT 1 26076 FAIRFAX 26089 AIRPORT 2	SCATERGD - OLYMPC 230kV Line 2	93%								
39	26076 FAIRFAX 26014 GRAMERC1 1 26076 FAIRFAX 26015 GRAMERC2 1										
40	26076 FAIRFAX 26014 GRAMERCY 1 26076 FAIRFAX 26014 GRAMERCY 2										
41	26076 FAIRFAX 26083 HOLYWD1 1 26076 FAIRFAX 26084 HOLYWD2 1										
42	26095 TAP 1 26014 GRAMERC1 1 26096 TAP 2 26015 GRAMERC2 1										
43	26095 TAP 1 26014 GRAMERCY 1 26096 TAP 2 26014 GRAMERCY 1										
44	26073 WLMNTN 26095 TAP 1 1 26073 WLMNTN 26096 TAP 2 1										
45	26091 HARBOR 26095 TAP 1 1 26091 HARBOR 26096 TAP 2 1										
46	26016 HALLDALE 26095 TAP 1 1 26016 HALLDALE 26096 TAP 2 1										
CIRCUIT BREAKER COMMON MODE OF FAILURE											
500kV Lines											
1	26003 ADELANTO 26115 RINALDI2 1 26105 VICTORVL 26003 ADELANTO 2	ADELANTO - TOLUCA 500kV Line 1									
2	26003 ADELANTO 26079 TOLUCA 1 26044 MARKETPL 26003 ADELANTO 1	VALLEY - RINALDI 230kV Line 1			93%	93%		95%	94%		
		VALLEY - RINALDI 230kV Line 2			93%	93%		95%	94%		
		VALLEY - TOLUCA 230kV Line 1			92%	92%		93%	92%		
		VALLEY - TOLUCA 230kV Line 2			92%	92%		93%	92%		
3	26105 VICTORVL 26003 ADELANTO 1 24086 LUGO 26105 VICTORVL 1	ADELANTO - TOLUCA 500kV Line 1									

2012 TEN-YEAR PLAN
CONTINGENCY ANALYSES RESULTS

CONT. NO.	OUTAGE ELEMENT	IMPACTED ELEMENT	BASECASE								
				HS 2018				HS 2022			
			HS13	HS18	High Castaic	High Castaic - So HC	High VIC-LA	HS22	High Castaic - So HC	LW17	HW15
4	26105 VICTORVL 26003 ADELANTO 2 26048 MCCULLGH 26105 VICTORVL 2										
5	26048 MCCULLGH 26105 VICTORVL 1 24042 ELDORDO 26048 MCCULLGH 1										
6	14003 NAVAJO 26123 CRYSTAL 1 26123 CRYSTAL 26048 MCCULLGH 1										
345kV Lines											
7	27135 MWC345 26043 INTERMT 1 26043 INTERMT 65995 MONA 1										
230kV Lines											
8	26010 SYLMARLA 26135 HSKLLCYN 1 26010 CASTAIC 26135 HSKLLCYN 1	HSKLLCYN - RINALDI 230kV Line 1			93%						
9	26135 HSKLLCYN 26052 OLIVE 1 26010 CASTAIC 26135 HSKLLCYN 2										
10	26135 HSKLLCYN 26061 RINALDI 1 26010 CASTAIC 26135 HSKLLCYN 3	HSKLLCYN - SYLMARLA 230kV Line 1			100%						
11	26081 ATWATER 26013 GLENDAL 1 26061 RINALDI 26013 GLENDAL 2										
12	26081 ATWATER 26013 GLENDAL 2 26061 RINALDI 26013 GLENDAL 1										
13	26103 VALLEY 26061 RINALDI 2 26103 VALLEY 26078 TOLUCA 2										
14	26094 SYLMARLA 26061 RINALDI 3 26010 CASTAIC 26094 SYLMARLA 1										
15	26094 SYLMARLA 26061 RINALDI 3 26061 RINALDI 26093 TARZANA 1	RINALDI - TARZANA 230kV Line 2									
16	26086 NRTHRDGE 26093 TARZANA 1 26093 TARZANA 26087 OLYMPIC 3										
17	26068 STJOHN 26063 RIVER 1 26063 RIVER 26631 MKT "A" A										

2012 TEN-YEAR PLAN
CONTINGENCY ANALYSES RESULTS

CONT. NO.	OUTAGE ELEMENT	IMPACTED ELEMENT	BASECASE								
				HS 2018				HS 2022			
			HS13	HS18	High Castaic	High Castaic - So HC	High VIC-LA	HS22	High Castaic - So HC	LW17	HW15
18	26025 HAYNES 26063 RIVER 1 26063 RIVER 26632 MKT "B" B										
19	26063 RIVER 26080 VELASCO 1 26063 RIVER 26633 MKT "C" C										
20	26132 BARRENRD 26061 RINALDI 1 24729 INYO 26136 COTTONWD 26136 COTTOMWD 26132 BARRENRD 1										
21	26132 BARRENRD 26061 RINALDI 1 26103 VALLEY 26061 RINALDI 1	VALLEY - RINALDI 230kV Line 2			97%	97%			98%		
22	26065 SCATERGD 26089 AIRPORT 2 26089 AIRPORT 26076 FAIRFAX 2	SCATERGD - AIRPORT 138kV Line 1							90%		
23	26065 SCATERGD 26089 AIRPORT 1 26089 AIRPORT 26076 FAIRFAX 1	SCATERGD - AIRPORT 138kV Line 2							90%		

Appendix I. Transient and Post-Transient Stability Results

2012 Ten Year Transmission Assessment

Transient & Post Transient Results

2015 Heavy Winter

CONT. NO.	OUTAGE	STABLE	Possible Violations			Post-Transient	
			MORC1	MORC2	FREQ DIP	ΔV>5%	ΔV>10%
(N-1) CONTINGENCY							
1	Adelanto-Rinaldi 500kV line	Yes	None	None	None	None	
2	Adelanto-Toluca 500kV line	Yes	None	None	None	None	
3	Adelanto-Victorville 500kV line	Yes	None	None	None	None	
4	Lugo-Victorville 500kV Line	Yes	None	None	None	None	
5	Victorville-Rinaldi 500kV Line	Yes	None	None	None	None	
6	Mccullgh-Victorville 500kV Line	Yes	None	None	None	None	
7	Mead-Victorville 287 kV Line	Yes	None	None	None	None	
8	Cottonwd-Barren Ridge 230 kV with Remedial Action Scheme (RAS)	Yes	None	None	None	None	
9	Rinaldi-Barren Ridge 230 kV Line	Yes	None	None	None	None	
10	PDCI bipole	Yes	None	None	None	None	
(N-2) CONTINGENCY							
11	IPP DC Bipole	Yes	None	None	None		None
12	Palo Verde-g2-OL-MA-RAS	Yes	None	None	None		None
13	Adelanto-Rinaldi and Victorville-Rinaldi 500 kV Lines	Yes	None	None	None		None
14	McCullgh-Victorville 500 kV Lines 1 & 2	Yes	None	None	None		None
15	Victorville-Century 287 kV Lines 1 & 2						
16	Rinaldi-Tarzana 230 kV Lines 1 & 2	Yes	None	None	None		None
17	Rinaldi-Glendale 230 kV Lines 1 & 2	Yes	None	None	None		None
18	Rinaldi-Valley 230 kV Lines 1 & 2	Yes	None	None	None		None
19	Toluca- Valley 230 kV Lines 1 & 2	Yes	None	None	None		None
20	Glendale-Atwater 230 kV Lines 1 & 2	Yes	None	None	None		None
21	Tarzana-Olympic 230 kV and 138 kV Lines	Yes	None	None	None		None
22	Velasco-Century 230 kV Lines 1 & 2	Yes	None	None	None		None
23	Century-Wilmington 138 kV Lines 1 & 2	Yes	None	None	None		None
24	Gramercy-Fairfax 138 kV Lines 1 & 2	Yes	None	None	None		None
25	Century-Gramercy 128 kV Lines 1 & 2	Yes	None	None	None		None
26	Gramercy Tap 1 & Tap 2 138 kV Lines	Yes	None	None	None		None
27	Airport-Fairfax 138 kV Lines 1 & 2	Yes	None	None	None		None
28	Barren Ridge-Haskell Lines 1 & 2	Yes	None	None	None		None
MULTIPLE CONTINGENCIES							
29	Toluca-Hollywood Lines 1,2 & 3	Yes	None	None	None		None
30	Rinaldi-Tarzana Lines 1 & 2 and Northridge-Tarzana Line 1	No	Yes	Yes	Yes		Diverged
31	Rinaldi-Tarzana Lines 1 & 2 and Northridge-Tarzana Line 1 with RAS	Yes	None	None	None		None

2012 Ten Year Transmission Assessment

Transient & Post Transient Results

2022 Heavy Summer

CONT. NO.	OUTAGE	STABLE	Possible Violations			Post-Transient	
			MORC1	MORC2	FREQ DIP	ΔV>5%	ΔV>10%
(N-1) CONTINGENCY							
1	Adelanto-Rinaldi 500kV line	Yes	None	None	None	None	
2	Adelanto-Toluca 500kV line	Yes	None	None	None	None	
3	Adelanto-Victorville 500kV line	Yes	None	None	None	None	
4	Lugo-Victorville 500kV Line	Yes	None	None	None	None	
5	Victorville-Rinaldi 500kV Line	Yes	None	None	None	None	
6	Mccullgh-Victorville 500kV Line	Yes	None	None	None	None	
7	Mead-Victorville 287 kV Line	Yes	None	None	None	None	
8	Cottonwd-Barren Ridge 230 kV with Remedial Action Scheme (RAS)	Yes	None	None	None	None	
9	Rinaldi-Barren Ridge 230 kV Line						
10	PDCI bipole	Yes	None	None	None	None	
(N-2) CONTINGENCY							
11	IPP DC Bipole	Yes	None	None	None		None
12	Palo Verde-g2-OL-MA-RAS	Yes	None	None	None		None
13	Adelanto-Rinaldi and Victorville-Rinaldi 500 kV Lines	Yes	None	None	None		None
14	McCullgh-Victorville 500 kV Lines 1 & 2	Yes	None	None	None		None
15	Victorville-Century 287 kV Lines 1 & 2						
16	Rinaldi-Tarzana 230 kV Lines 1 & 2	Yes	None	None	None		None
17	Rinaldi-Glendale 230 kV Lines 1 & 2	Yes	None	None	None		None
18	Rinaldi-Valley 230 kV Lines 1 & 2	Yes	None	None	None		None
19	Toluca- Valley 230 kV Lines 1 & 2	Yes	None	None	None		None
20	Glendale-Atwater 230 kV Lines 1 & 2	Yes	None	None	None		None
21	Tarzana-Olympic 230 kV and 138 kV Lines	Yes	None	None	None		None
22	Velasco-Century 230 kV Lines 1 & 2	Yes	None	None	None		None
23	Century-Wilmington 138 kV Lines 1 & 2	Yes	None	None	None		None
24	Gramercy-Fairfax 138 kV Lines 1 & 2	Yes	None	None	None		None
25	Century-Gramercy 128 kV Lines 1 & 2	Yes	None	None	None		None
26	Gramercy Tap 1 & Tap 2 138 kV Lines	Yes	None	None	None		None
27	Airport-Fairfax 138 kV Lines 1 & 2	Yes	None	None	None		None
28	Barren Ridge-Haskell Lines 1 & 2	Yes	None	None	None		None
MULTIPLE CONTINGENCIES							
29	Toluca-Hollywood Lines 1,2 & 3	Yes	None	None	None		None
30	Rinaldi-Tarzana Lines 1 & 2 and Northridge-Tarzana Line 1	No	Yes	Yes	Yes		Diverged
31	Rinaldi-Tarzana Lines 1 & 2 and Northridge-Tarzana Line 1 with RAS	Yes	None	None	None		None

2012 Ten Year Transmission Assessment

Transient & Post Transient Results

2018 Heavy Summer

CONT. NO.	OUTAGE	STABLE	Possible Violations			Post-Transient	
			MORC1	MORC2	FREQ DIP	ΔV>5%	ΔV>10%
(N-1) CONTINGENCY							
1	Adelanto-Rinaldi 500kV line	Yes	None	None	None	None	
2	Adelanto-Toluca 500kV line	Yes	None	None	None	None	
3	Adelanto-Victorville 500kV line	Yes	None	None	None	None	
4	Lugo-Victorville 500kV Line	Yes	None	None	None	None	
5	Victorville-Rinaldi 500kV Line	Yes	None	None	None	None	
6	Mccullgh-Victorville 500kV Line	Yes	None	None	None	None	
7	Mead-Victorville 287 kV Line	Yes	None	None	None	None	
8	Cottonwd-Barren Ridge 230 kV with Remedial Action Scheme (RAS)	Yes	None	None	None	None	
9	Rinaldi-Barren Ridge 230 kV Line						
10	PDCI bipole	Yes	None	None	None	None	
(N-2) CONTINGENCY							
11	IPP DC Bipole	Yes	None	None	None		None
12	Palo Verde-g2-OL-MA-RAS	Yes	None	None	None		None
13	Adelanto-Rinaldi and Victorville-Rinaldi 500 kV Lines	Yes	None	None	None		None
14	McCullgh-Victorville 500 kV Lines 1 & 2	Yes	None	None	None		None
15	Victorville-Century 287 kV Lines 1 & 2						
16	Rinaldi-Tarzana 230 kV Lines 1 & 2	Yes	None	None	None		None
17	Rinaldi-Glendale 230 kV Lines 1 & 2	Yes	None	None	None		None
18	Rinaldi-Valley 230 kV Lines 1 & 2	Yes	None	None	None		None
19	Toluca- Valley 230 kV Lines 1 & 2	Yes	None	None	None		None
20	Glendale-Atwater 230 kV Lines 1 & 2	Yes	None	None	None		None
21	Tarzana-Olympic 230 kV and 138 kV Lines	Yes	None	None	None		None
22	Velasco-Century 230 kV Lines 1 & 2	Yes	None	None	None		None
23	Century-Wilmington 138 kV Lines 1 & 2	Yes	None	None	None		None
24	Gramercy-Fairfax 138 kV Lines 1 & 2	Yes	None	None	None		None
25	Century-Gramercy 128 kV Lines 1 & 2	Yes	None	None	None		None
26	Gramercy Tap 1 & Tap 2 138 kV Lines	Yes	None	None	None		None
27	Airport-Fairfax 138 kV Lines 1 & 2	Yes	None	None	None		None
28	Barren Ridge-Haskell Lines 1 & 2	Yes	None	None	None		None
MULTIPLE CONTINGENCIES							
29	Toluca-Hollywood Lines 1,2 & 3	Yes	None	None	None		None
30	Rinaldi-Tarzana Lines 1 & 2 and Northridge-Tarzana Line 1	No	Yes	Yes	Yes		Diverged
31	Rinaldi-Tarzana Lines 1 & 2 and Northridge-Tarzana Line 1 with RAS	Yes	None	None	None		None

2012 Ten Year Transmission Assessment

Transient & Post Transient Results

2013 Heavy Summer

CONT. NO.	OUTAGE	STABLE	Possible Violations			Post-Transient	
			MORC1	MORC2	FREQ DIP	ΔV>5%	ΔV>10%
(N-1) CONTINGENCY							
1	Adelanto-Rinaldi 500kV line	Yes	None	None	None	None	
2	Adelanto-Toluca 500kV line	Yes	None	None	None	None	
3	Adelanto-Victorville 500kV line	Yes	None	None	None	None	
4	Lugo-Victorville 500kV Line	Yes	None	None	None	None	
5	Victorville-Rinaldi 500kV Line	Yes	None	None	None	None	
6	Mccullgh-Victorville 500kV Line	Yes	None	None	None	None	
7	Mead-Victorville 287 kV Line	Yes	None	None	None	None	
8	Cottonwd-Barren Ridge 230 kV with Remedial Action Scheme (RAS)	Yes	None	None	None	None	
9	Rinaldi-Barren Ridge 230 kV Line	Yes	None	None	None	None	
10	PDCI bipole	Yes	None	None	None	None	
(N-2) CONTINGENCY							
11	IPP DC Bipole	Yes	None	None	None		None
12	Palo Verde-g2-OL-MA-RAS	Yes	None	None	None		None
13	Adelanto-Rinaldi and Victorville-Rinaldi 500 kV Lines	Yes	None	None	None		None
14	McCullgh-Victorville 500 kV Lines 1 & 2	Yes	None	None	None		None
15	Victorville-Century 287 kV Lines 1 & 2						
16	Rinaldi-Tarzana 230 kV Lines 1 & 2	Yes	None	None	None		None
17	Rinaldi-Glendale 230 kV Lines 1 & 2	Yes	None	None	None		None
18	Rinaldi-Valley 230 kV Lines 1 & 2	Yes	None	None	None		None
19	Toluca- Valley 230 kV Lines 1 & 2	Yes	None	None	None		None
20	Glendale-Atwater 230 kV Lines 1 & 2	Yes	None	None	None		None
21	Tarzana-Olympic 230 kV and 138 kV Lines	Yes	None	None	None		None
22	Velasco-Century 230 kV Lines 1 & 2	Yes	None	None	None		None
23	Century-Wilmington 138 kV Lines 1 & 2	Yes	None	None	None		None
24	Gramercy-Fairfax 138 kV Lines 1 & 2	Yes	None	None	None		None
25	Century-Gramercy 128 kV Lines 1 & 2	Yes	None	None	None		None
26	Gramercy Tap 1 & Tap 2 138 kV Lines	Yes	None	None	None		None
27	Airport-Fairfax 138 kV Lines 1 & 2	Yes	None	None	None		None
28	Barren Ridge-Haskell Lines 1 & 2	Yes	None	None	None		None
MULTIPLE CONTINGENCIES							
29	Toluca-Hollywood Lines 1,2 & 3	Yes	None	None	None		None
30	Rinaldi-Tarzana Lines 1 & 2 and Northridge-Tarzana Line 1	No	Yes	Yes	Yes		Diverged
31	Rinaldi-Tarzana Lines 1 & 2 and Northridge-Tarzana Line 1 with RAS	Yes	None	None	None		None

2012 Ten Year Transmission Assessment

Transient & Post Transient Results

2017 Light Winter

CONT. NO.	OUTAGE	STABLE	Possible Violations			Post-Transient	
			MORC1	MORC2	FREQ DIP	ΔV>5%	ΔV>10%
(N-1) CONTINGENCY							
1	Adelanto-Rinaldi 500kV line	Yes	None	None	None	None	
2	Adelanto-Toluca 500kV line	Yes	None	None	None	None	
3	Adelanto-Victorville 500kV line	Yes	None	None	None	None	
4	Lugo-Victorville 500kV Line	Yes	None	None	None	None	
5	Victorville-Rinaldi 500kV Line	Yes	None	None	None	None	
6	Mccullgh-Victorville 500kV Line	Yes	None	None	None	None	
7	Mead-Victorville 287 kV Line	Yes	None	None	None	None	
8	Cottonwd-Barren Ridge 230 kV with Remedial Action Scheme (RAS)	Yes	None	None	None	None	
9	Rinaldi-Barren Ridge 230 kV Line						
10	PDCI bipole	Yes	None	None	None	None	
(N-2) CONTINGENCY							
11	IPP DC Bipole	Yes	None	None	None		None
12	Palo Verde-g2-OL-MA-RAS	Yes	None	None	None		None
13	Adelanto-Rinaldi and Victorville-Rinaldi 500 kV Lines	Yes	None	None	None		None
14	McCullgh-Victorville 500 kV Lines 1 & 2	Yes	None	None	None		None
15	Victorville-Century 287 kV Lines 1 & 2						
16	Rinaldi-Tarzana 230 kV Lines 1 & 2	Yes	None	None	None		None
17	Rinaldi-Glendale 230 kV Lines 1 & 2	Yes	None	None	None		None
18	Rinaldi-Valley 230 kV Lines 1 & 2	Yes	None	None	None		None
19	Toluca- Valley 230 kV Lines 1 & 2	Yes	None	None	None		None
20	Glendale-Atwater 230 kV Lines 1 & 2	Yes	None	None	None		None
21	Tarzana-Olympic 230 kV and 138 kV Lines	Yes	None	None	None		None
22	Velasco-Century 230 kV Lines 1 & 2	Yes	None	None	None		None
23	Century-Wilmington 138 kV Lines 1 & 2	Yes	None	None	None		None
24	Gramercy-Fairfax 138 kV Lines 1 & 2	Yes	None	None	None		None
25	Century-Gramercy 128 kV Lines 1 & 2	Yes	None	None	None		None
26	Gramercy Tap 1 & Tap 2 138 kV Lines	Yes	None	None	None		None
27	Airport-Fairfax 138 kV Lines 1 & 2	Yes	None	None	None		None
28	Barren Ridge-Haskell Lines 1 & 2	Yes	None	None	None		None
MULTIPLE CONTINGENCIES							
29	Toluca-Hollywood Lines 1,2 & 3	Yes	None	None	None		None
30	Rinaldi-Tarzana Lines 1 & 2 and Northridge-Tarzana Line 1	No	Yes	Yes	Yes		Diverged
31	Rinaldi-Tarzana Lines 1 & 2 and Northridge-Tarzana Line 1 with RAS	Yes	None	None	None		None

Appendix J. Renewable Transmission Expansion Project

BARREN RIDGE RENEWABLE TRANSMISSION PROJECT

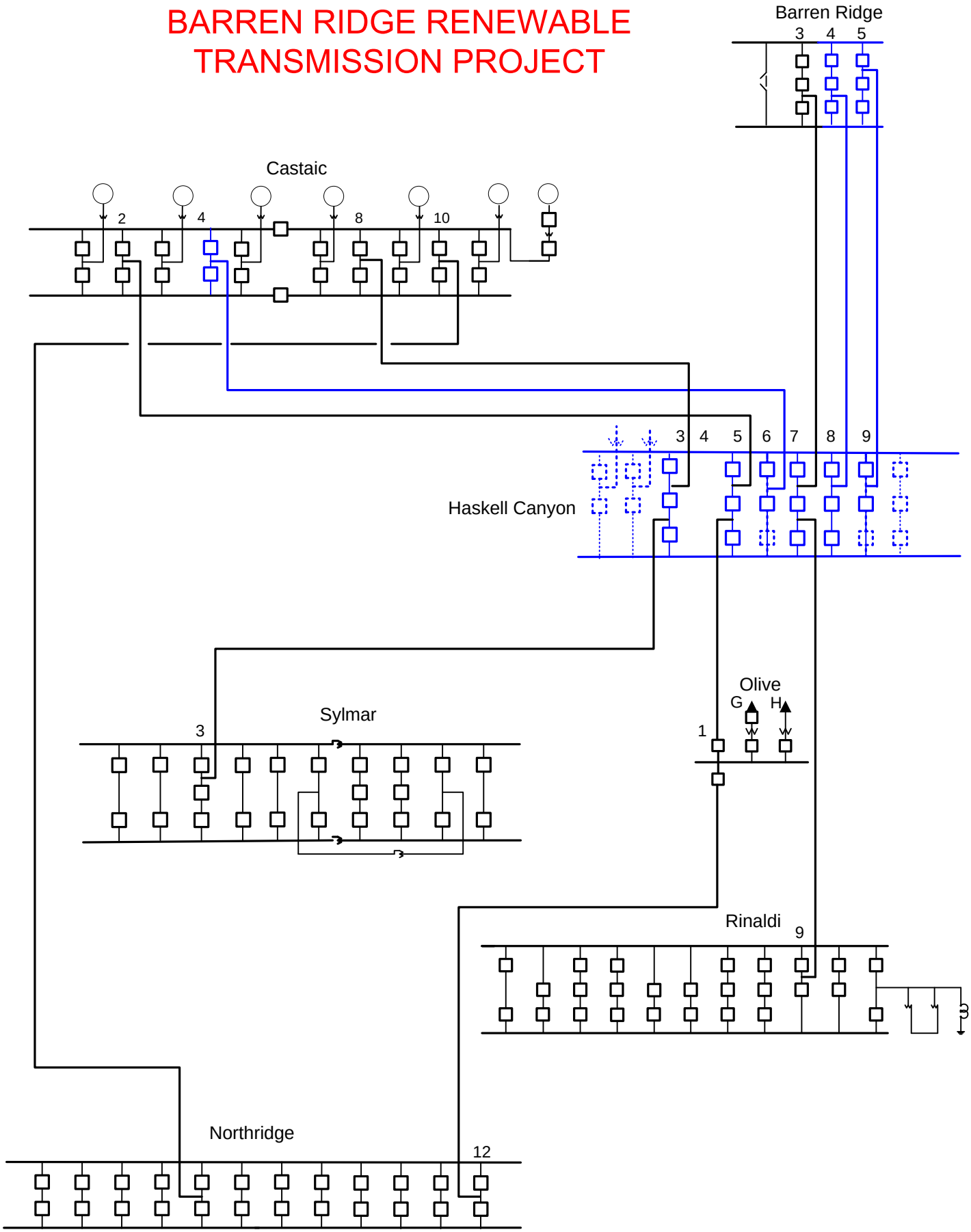

SOUTH-OF-HASKELL CANYON UPGRADE

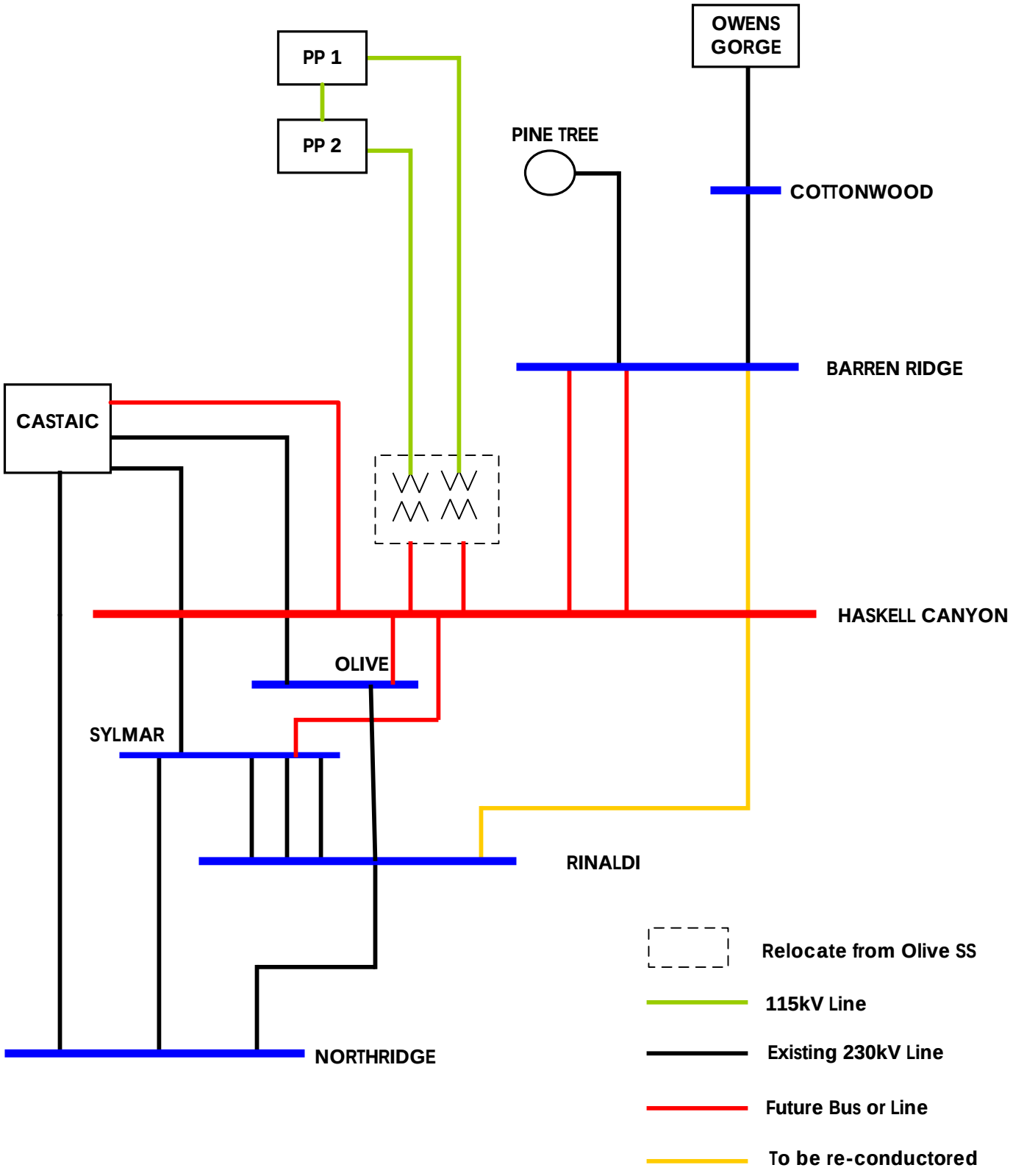

Appendix K. Long-Term Transmission Plan

To meet the City's Renewable Portfolio Standard (RPS) goals of 33% by 2020 at the lowest cost, expansion of existing transmission capacity to move greater potential renewable energy resources to load centers are needed. To gain access to these renewable resources and to support the RPS goals, Power System Planning & Development has developed long-term transmission plan which consists of potential upgrade of the existing major transmission lines.

Figure K-1 shows LADWP's major transmission lines connecting to external generating resources along with identified high potential renewable resources.

FIGURE K-1 – LADWP MAJOR TRANSMISION LINES

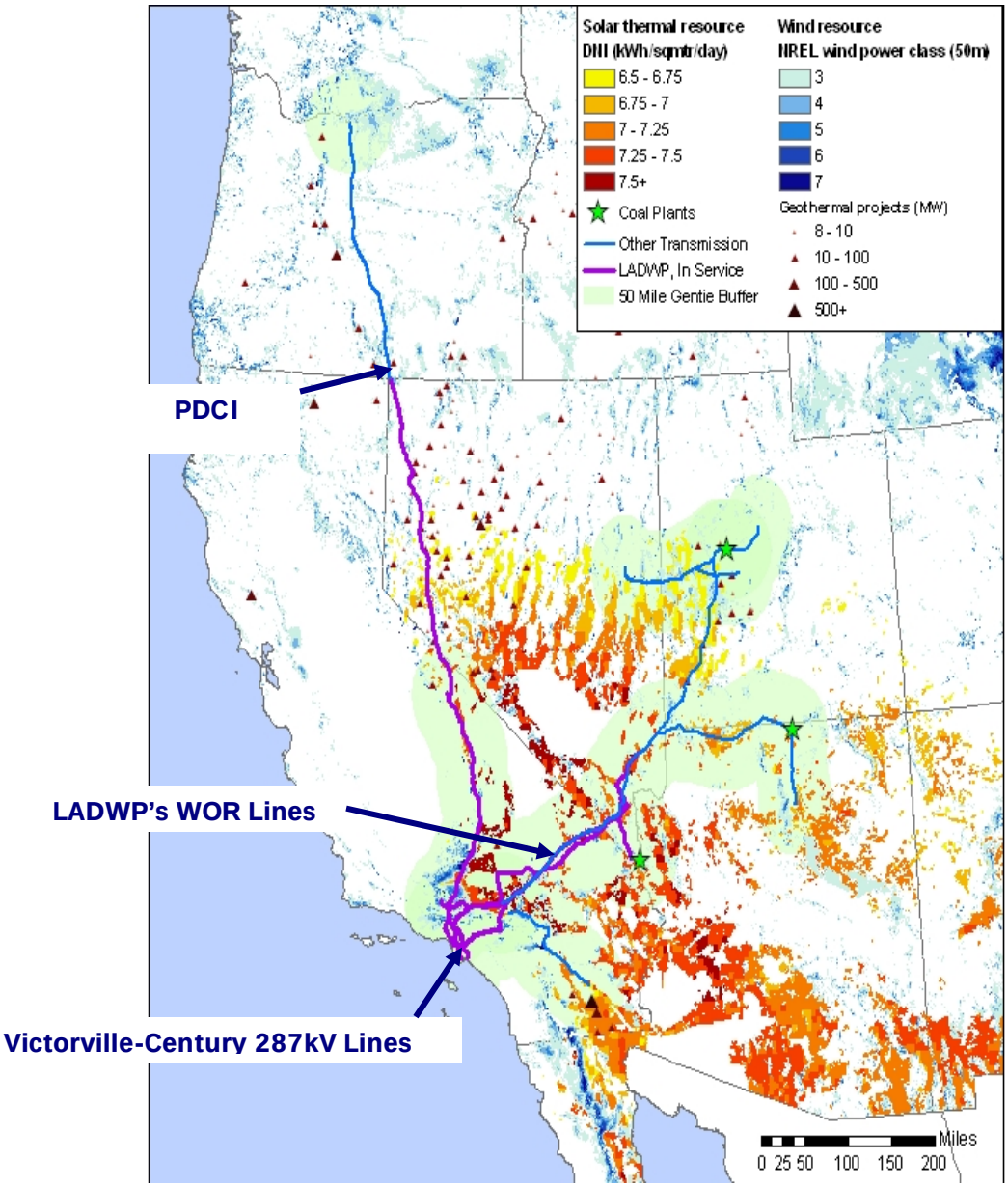

Three long-term transmission projects are being technically evaluated in the feasibility stage and have demonstrated superior cost effectiveness to meet future transmission needs with minimum environmental impacts. Those are:

1. Upgrade PDCI with hybrid voltage-current enhancement (DC voltage at Sylmar=±495kV DC and DC current = 3410 A)

2. Upgrade Series Compensation of all LADWP's WOR Transmission to 75%

3. Convert the double-circuit Victorville – Century 287 kV AC Lines to ±245kV two spit Voltage Source Controller (VSC) bipole.

Table K-1 summarized the intended benefits of each upgrade

TABLE K-1 INTENDED BENEFITS

LONG-TERM TRANSMISSION PROJECT	EXISTING CAPACITY	POTENTIAL INCREASED CAPACITY	NET CAPACITY INCREASE	BENEFITS
Upgrade PDCI with hybrid voltage-current enhancement	3100 MW	3733 MW	633 MW	Deliver additional amount of renewable wind and hydro energy from the Pacific Northwest to Los Angeles.
Upgrade Series Compensation of all LADWP's WOR Transmission to 75%	3373 MW	TBD	TBD	Deliver additional amount of renewable wind, solar, and geothermal from Wyoming, Utah, Arizona, Nevada, and California desert southwest.
Convert the double-circuit Victorville – Century 287 kV AC Lines to ±245kV two split VSC bipole.	894 MW	1780 MW	886 MW	Increase the power transfer capability from Victorville-Adelanto into the Los Angeles basin area and provide additional voltage support capability.

Appendix L. VICTORVILLE/ADELANTO TO LA BASIN SHORT-TERM UPGRADE

Background:

The Adelanto-Victorville-to-LA Basin (VIC-LA) Transmission System consists of the Adelanto-Toluca, Adelanto-Rinaldi, Victorville-Rinaldi 500 kV Lines and the two parallel Victorville-Century 287 kV Lines. The Victorville-Century 287 kV Lines are the oldest and the most restricted transmission path to LA due to its low thermal limit. In the late 1980s, System Planning conducted various studies assessing options to increase total import capability from the Adelanto/Victorville Switching Stations to LA Basin with the anticipation of heavy import from the out-of-state generating plants such as Intermountain, Navajo, Mohave, Hoover, and Palo Verde. During the course of the study, it was found that upgrading the parallel Victorville-Century Lines to any voltage level higher than 287 kV would present a formidable opposition to community acceptance, encounter a very difficult license/regulatory approval process, expose to high risk of litigation, and finally incur very expensive land acquisition.

Figure L-1 -VIC-LA Transmission System along with the LAWP/SCE 500 kV AC Transmission System.

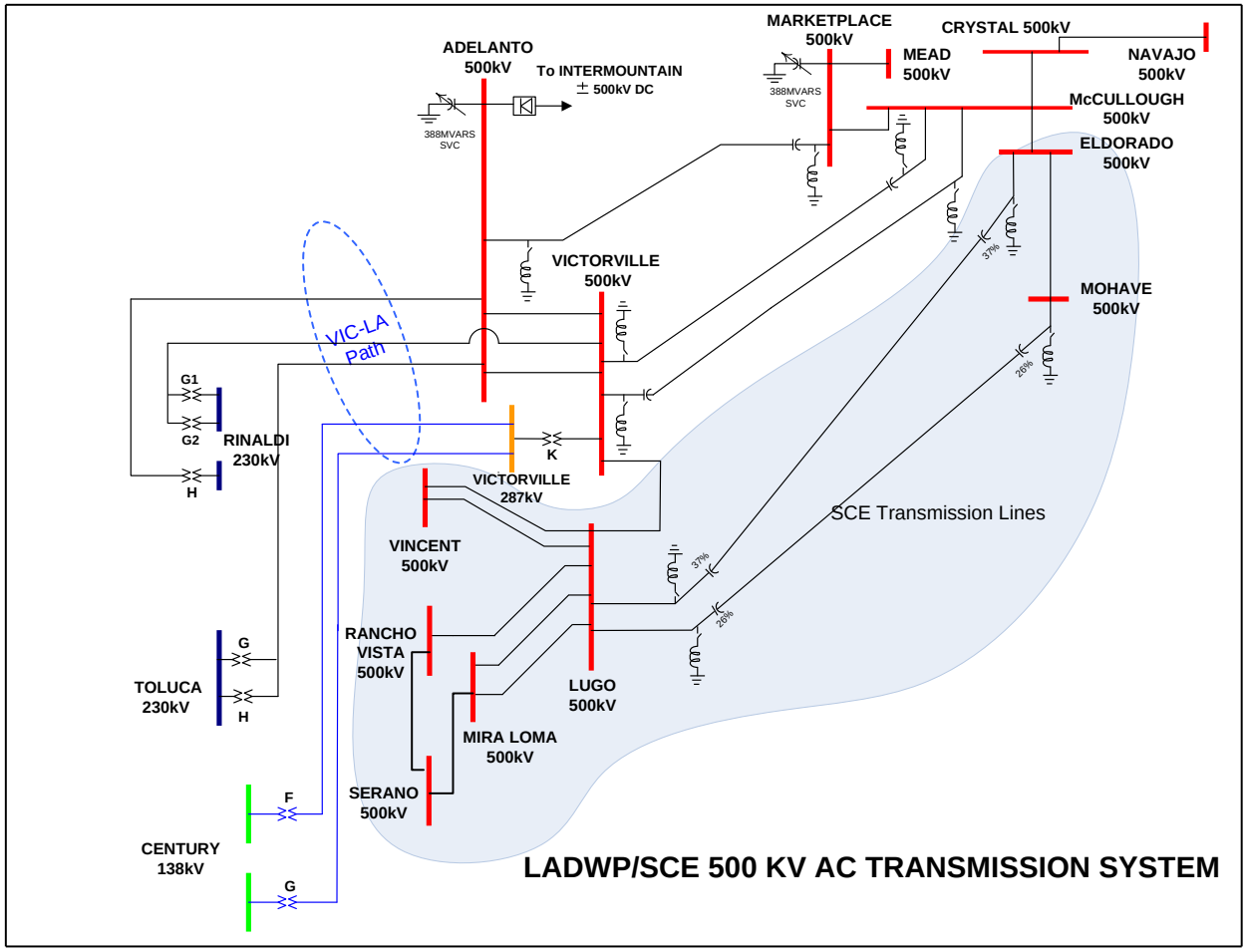

In July 2010, System Planning, in conjunction with the HVDC and Voltage Support Group, has conducted long-term conceptual upgrade study of the VIC-LA system which consists of converting the double-circuit Victorville Century 287 kV AC Lines to ± 245kV two split Voltage Source Controller (VSC) bipole,

without reconductoring the existing line. This study has concluded that this option is not only technically feasible but also by far is the most cost effective option to open up this congested path with minimal impact to the neighboring system. Moreover, VSC would also provide voltage support at the most low-voltage prone location in DWP system.

Recently, DWP's strategic plan of earlier divestiture of coal power plant at Navajo Generating Station has brought on the need to upgrade of the VIC-LA system in short-term. This 2012 Assessment has conducted preliminary analysis of the short term VIC-LA upgrade, based on a highly conceptual scenario.

Preliminary Results:

Following is the summary of findings:

VIC-LA Flow	Outage(s)	Reliability Category	Overloaded Line or System Violation	Possible Corrective Measures
3643 MW	Adelanto-Rinaldi and Victorville-Rinaldi-Victorville 500 KV Lines	C (TPL-003-0a)	Auto-transformer 500/287kV (bank K) at Victorville Switching Station	• Add a parallel auto-transformer 500/287 kV • Curtail firm and non-firm import
4014 MW	No Outage	A (TPL-001-0.1)	Voltage below 0.99 p.u. throughout LA Basin	Install shunt capacitors at different strategic locations in LA Basin to improve power factor.
	Adelanto-Rinaldi 500 kV Line	B (TPL-002-0b)	S6 switchgear of Bank G and H at RS-H (Toluca) connecting the Adelanto-Toluca Line	Upgrade/replace SF6 Switchgear
	Adelanto-Rinaldi and Victorville-Rinaldi-Victorville 500 KV Lines	C (TPL-003-0a)	Auto-transformer 500/287kV (bank K) at Victorville Switching Station	• Add a parallel auto-transformer 500/287 kV • Curtail firm and non-firm import

VIC-LA Flow	Outage(s)	Reliability Category	Overloaded Line or System Violation	Corrective Measures
4419 MW	No Outage	A (TPL-001-0.1)	Voltage below 0.99 p.u. throughout LA Basin	Install shunt capacitors at different strategic locations in LA Basin to improve power factor.
	Adelanto-Rinaldi 500 kV Line Victorville-Rinaldi 500 kV Line Victorville-Lugo 500 kV Line	B (TPL-002-0b)	SF6 switchgear of Bank G and H at RS-H (Toluca) connecting the Adelanto-Toluca Line	Upgrade/replace SF6 Switchgear
	Adelanto-Toluca 500 kV Line	B (TPL-002-0b)	Auto-transformer 500/287kV (bank K) at Victorville Switching Station 2 circuit breakers and 4 disconnect s terminating Adelanto-Rinaldi Line	• Add a parallel auto-transformer 500/287 kV • Replace 2 circuit breakers and 4 disconnects with higher continuous ratings
	Adelanto-Rinaldi and Victorville-Rinaldi-Victorville 500 KV Lines	C (TPL-003-0a)	Auto-transformer 500/287kV (bank K) at Victorville Switching Station SF6 switchgear of Bank G and H at RS-H (Toluca) connecting the Adelanto-Toluca Line Auto-transformer 500/230 kV Bank H at Toluca Victorville Lugo 500 kV Line	• Add a parallel auto-transformer 500/287 kV • Upgrade/replace SF6 Switchgear • Upgrade/replace auto-transformer bank H at RS-E (Toluca) • Construct a new Adelanto-Lugo Line • Curtail firm and non-firm import
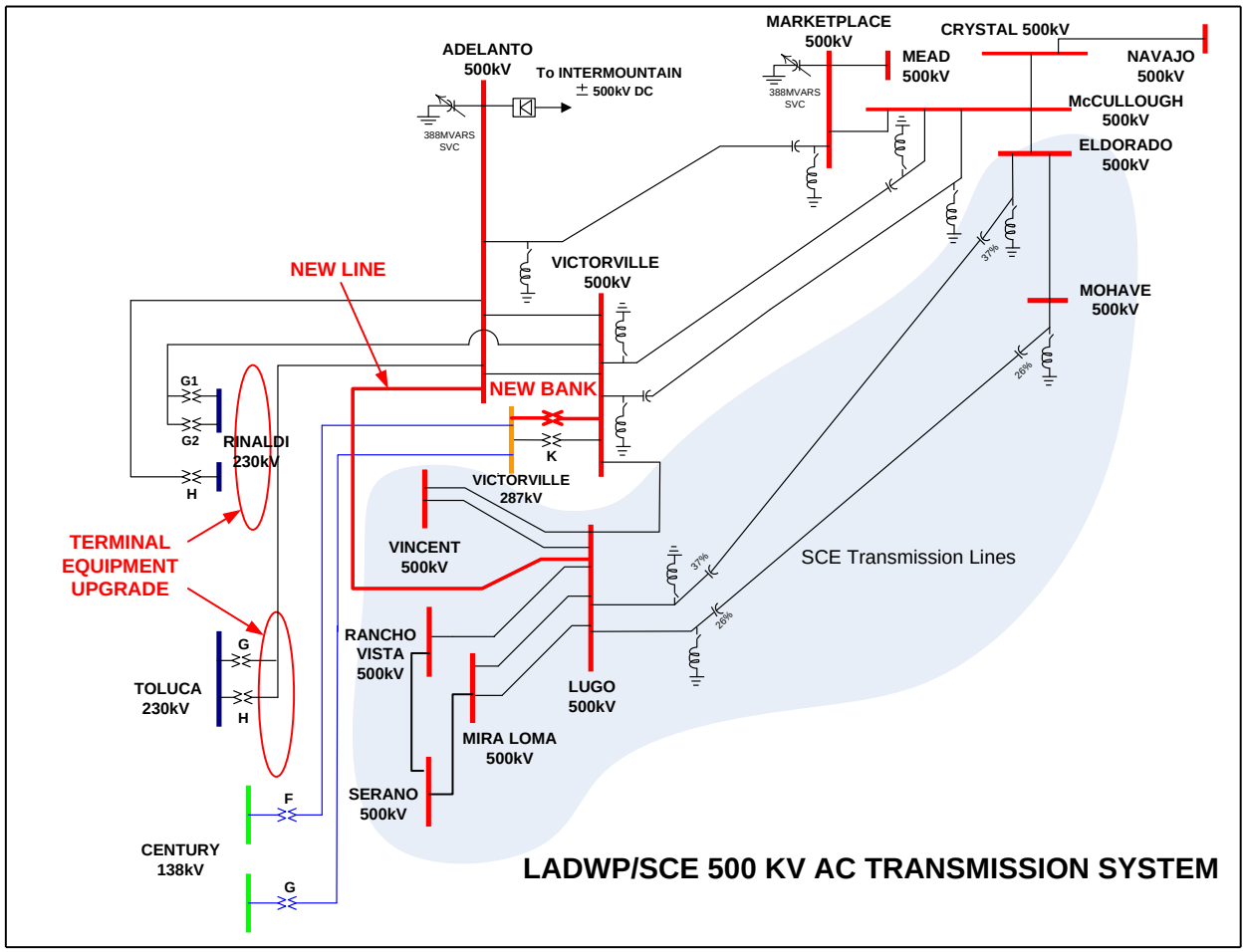
Figure L2 – Upgrade/Additions Required for VIC-LA Transfer at 4419 MW