CALIFORNIA REGIONAL WATER QUALITY CONTROL BOARD
SAN DIEGO REGION

2375 Northside Drive, Suite 100, San Diego, CA 92108
(619) 516-1990 • Fax (619) 516-1994
http://www.waterboards.ca.gov

ORDER NO. R9-2015-0070
NPDES PERMIT NO. CA0107239

WASTE DISCHARGE REQUIREMENTS
FOR THE UNIVERSITY OF CALIFORNIA, SAN DIEGO - SCRIPPS INSTITUTION OF OCEANOGRAPHY
DISCHARGE TO THE PACIFIC OCEAN

The following Discharger is subject to waste discharge requirements (WDRs) set forth in this Order:

Table 1. Discharger Information

Discharger	University of California, San Diego
Name of Facility	University of California, San Diego – Scripps Institution of Oceanography
Facility Address	9500 Gilman Drive, MC0089
	San Diego, CA 92023-0089
	San Diego County

Table 2. Discharge Location

Discharge Point	Effluent Description	Discharge Point Latitude	Discharge Point Longitude	Receiving Water
001	Aquaria wastewater and filtered seawater	32 º, 52', 2" N	117 º, 15', 13" W	Pacific Ocean
002	Storm water	32 º, 51', 58" N	117 º, 15', 14" W	Pacific Ocean
003	Aquaria wastewater and filtered seawater	32 º, 51', 56" N	117 º, 15', 15" W	Pacific Ocean
004a	Unfiltered raw seawater	32 º, 51', 57" N	117 º, 15', 15" W	Pacific Ocean
004b	Filter backwash water	32 º, 51', 57" N	117 º, 15', 15" W	Pacific Ocean

Table 3. Administrative Information

This Order was adopted by the Regional Water Quality Control Board on:	**November 18, 2015**
This Order shall become effective on:	**January 1, 2016**
This Order shall expire on:	**December 31, 2020**
The Discharger shall file a Report of Waste Discharge as an application for renewal of WDRs in accordance with title 23, California Code of Regulations, and an application for reissuance of a National Pollutant Discharge Elimination System (NPDES) permit no later than:	**180 days prior to the Order expiration date**
The U.S. Environmental Protection Agency (USEPA) and the Regional Water Quality Control Board have classified this discharge as follows:	**Minor discharge**

I, David W. Gibson, Executive Officer, do hereby certify that this Order with all attachments is a full, true, and correct copy of the Order adopted by the California Regional Water Quality Control Board, San Diego Region, on November 18, 2015.

David W. Gibson, Executive Officer

Table of Contents

I. Facility Information 4
II. Findings 4
III. Discharge Prohibitions 4
IV. Effluent Limitations and Discharge Specifications 5
A. Effluent Limitations 5
B. Land Discharge Specifications – Not Applicable 11
C. Reclamation Specifications – Not Applicable 11
V. Receiving Water Limitations 11
A. Surface Water Limitations 11
B. Groundwater Limitations – Not Applicable 13
VI. Provisions 13
A. Standard Provisions 13
B. Monitoring and Reporting Program (MRP) Requirements 14
C. Special Provisions 14
VII. Compliance Determination 16
A. Compliance with Average Monthly Effluent Limitation (AMEL) 16
B. Compliance with Average Weekly Effluent Limitation (AWEL) 16
C. Compliance with Maximum Daily Effluent Limitation (MDEL) 16
D. Compliance with Instantaneous Minimum Effluent Limitation 17
E. Compliance with Instantaneous Maximum Effluent Limitation 17
F. Compliance with 6-Month Median Effluent Limitation 17
G. Mass and Concentration Limitations 17
H. Ocean Plan Provisions for Table 1 Constituents 17
I. Bacterial Standards and Analysis 18
J. Chronic Toxicity 18

Tables

Table 1. Discharger Information 1
Table 2. Discharge Location 1
Table 3. Administrative Information 1
Table 4. Technology-Based Effluent Limitations for Outfalls 001, 003, 004a, and 004b 5
Table 5. Water Quality-Based Effluent Limitations for Outfalls 001, 003, 004a, and 004b[1,] 6
Table 6. Performance Goals for Outfalls 001, 002, 003, 004a, and 004b[1,2,3] 8

Attachments

Attachment A – Definitions A-1
Attachment B – Map B-1
Attachment C – Flow Schematic C-1
Attachment D – Standard Provisions D-1
Attachment E – Monitoring and Reporting Program E-1
Attachment F – Fact Sheet F-1
Attachment G – Ocean Plan and Basin Plan Prohibitions G-1
Attachment H – Reasonable potential analysis results summary H-1

I. FACILITY INFORMATION

The University of California, San Diego (Discharger) is the owner and operator of the University of California, San Diego – Scripps Institution of Oceanography (Facility), an aquaria, research, and higher educational facility. Information describing the Facility is summarized in Table 1 and in sections I and II of the Fact Sheet (Attachment F). Section I of the Fact Sheet also includes information regarding the Facility's permit application.

II. FINDINGS

The California Regional Water Quality Control Board, San Diego Region (San Diego Water Board), finds:

A. Legal Authorities. This Order serves as WDRs pursuant to article 4, chapter 4, division 7 of the California Water Code (Water Code) (commencing with section 13260). This Order is also issued pursuant to section 402 of the federal Clean Water Act (CWA) and implementing regulations adopted by the USEPA and chapter 5.5, division 7 of the Water Code (commencing with section 13370). It shall serve as an NPDES permit for point source discharges from this Facility to surface waters.

B. Background and Rationale for Requirements. The San Diego Water Board developed the requirements in this Order based on information submitted as part of the application, through monitoring and reporting programs, and other available information. The Fact Sheet (Attachment F), which contains background information and rationale for the requirements in this Order, is hereby incorporated into and constitutes Findings for this Order. Attachments A through E, G, and H are also incorporated into this Order.

C. Provisions and Requirements Implementing State Law. Not Applicable

D. Notification of Interested Parties. The San Diego Water Board has notified the Discharger and interested agencies and persons of its intent to prescribe WDRs for the discharge and has provided them with an opportunity to submit their written comments and recommendations. Details of notification are provided in the Fact Sheet.

E. Consideration of Public Comment. The San Diego Water Board, in a public meeting, heard and considered all comments pertaining to the discharge. Details of the Public Hearing are provided in the Fact Sheet.

THEREFORE, IT IS HEREBY ORDERED that this Order supersedes Order No. R9-2005-0008 except for enforcement purposes, and, in order to meet the provisions contained in division 7 of the Water Code (commencing with section 13000) and regulations adopted thereunder, and the provisions of CWA and regulations and guidelines adopted thereunder, the Discharger shall comply with the requirements in this Order. This action in no way prevents the San Diego Water Board from taking enforcement action for past violations of Order No. R9-2005-0008.

III. DISCHARGE PROHIBITIONS

A. Discharges of wastes in a manner or to a location which have not been specifically authorized by this Order and for which valid waste discharge requirements are not in force are prohibited.

B. The Discharger must comply with Waste Discharge Prohibitions contained in chapter 4 of the Water Quality Control Plan for the San Diego Basin (Basin Plan), incorporated into this Order as if fully set forth herein and summarized in Attachment G, as a condition of this Order.

C. The Discharger must comply with Discharge Prohibitions contained in the Water Quality Control Plan for Ocean Waters of California, California Ocean Plan (Ocean Plan), incorporated into this Order as if fully set forth herein and summarized in Attachment G, as a condition of this Order.

D. The discharge of industrial waste other than seawater that has been pumped from the Pacific Ocean and circulated through the Facility's aquaria as discussed in section II of the Fact Sheet is prohibited.

E. The dumping or deposition of oil, trash, or other industrial waste into the ocean or adjacent to the ocean in any manner that may permit it to be washed into the ocean is prohibited.

F. The discharge of seawater in excess of 1.25 million gallons per day (MGD) from Outfall 001, 003, 004a, and 004b is prohibited unless the discharger obtains revised WDRs for the proposed increase in flow.

G. Natural water quality conditions in the receiving water must not be altered as a result of the discharge from the Facility.

H. Discharges of wastes to Areas of Special Biological Significance (ASBS) not covered by an Ocean Plan exception are prohibited.

I. The discharge of copper additives is prohibited.

J. All discharges of non-storm water urban runoff (i.e., any discharge of urban runoff to a storm drain that is not composed entirely of storm water), except those associated with emergency firefighting, are prohibited.

IV. EFFLUENT LIMITATIONS AND DISCHARGE SPECIFICATIONS

A. Effluent Limitations

1. Final Effluent Limitations – Discharge Points 001, 003, 004a, and 004b

The Discharger shall maintain compliance with the following effluent limitations at Discharge Points 001, 003, 004a, and 004b (also known as Outfalls 001, 003, 004a, and 004b), with compliance measured at Monitoring Locations EFF-001, EFF-003, EFF-004a, and EFF-004b as described in the Monitoring and Reporting Program, Attachment E:

Table 4. Technology-Based Effluent Limitations for Outfalls 001, 003, 004a, and 004b

Parameter	Units	Effluent Limitations[1]		
		Average Monthly	Average Weekly	Instantaneous Maximum
Oil and Grease	mg/l	25	40	75
	lbs/day	261	417	782
Total Suspended Solids (TSS)	mg/l	60	--	120
	lbs/day	626	--	1251
Settleable Solids	ml/l	1.0	1.5	3.0
Turbidity	NTU	75	100	225
pH	Units	Within 6.0 to 9.0 at all times		

1. Mass-based effluent limitations are based on the flow prohibition of 1.25 MGD (section III.F of this Order): Parameter Concentration (mg/L) x Flow Limit (MGD) x 8.34 (conversion factor) = Mass-based Performance Goal expressed as lbs/day. The mass-based effluent limitations apply to the total mass emission rate from Outfall 001, 003, 004a, and 004b: measured concentration-Outfall 001 (mg/L) x measured flow-Outfall 001 (MGD) + measured concentration-Outfall 003 (mg/L) x estimated/measured flow-Outfall 003 (MGD) + measured

concentration-Outfall 004a (mg/L) x estimated/measured flow-Outfall 004a (mg/L) (MGD) + measured concentration-Outfall 004b x estimated/measured flow-Outfall 004b (MGD) x 8.34 (conversion factor) = calculated mass-based emission rate (lbs/day).

Table 5. Water Quality-Based Effluent Limitations for Outfalls 001, 003, 004a, and 004b[1,]

Parameter	Units	Effluent Limitations[2,3]			
		6-Month Median	Daily Maximum	Instantaneous Maximum	Average Monthly
Protection of Marine Aquatic Life					
Chromium (Hexavalent), Total Recoverable (effluent limitations for Outfall 004b only)	µg/l	16	64	160	--
	lbs/day	1.7E-01	6.7E-01	1.7E+00	--
Copper, Total Recoverable (effluent limitations for Outfalls 001 and 003 only)	µg/l	1.0E+01	8.2E+01	2.26E+02	--
	lbs/day	1.0E-01	8.5E-01	2.4E+00	--
Lead, Total Recoverable (effluent limitations for Outfall 003 only)	µg/l	1.6 E+01	6.4 E+01	1.60 E+02	--
	lbs/day	1.7E-01	6.7E-01	1.7E+00	--
Chronic Toxicity[4] (effluent limitations for Outfalls 003 and 004a only)	Pass/Fail, % Effect (Test of Significant Toxicity	--	Pass or % effect < 50[5]	--	Pass[6]
Protection of Human Health - Carcinogens					
Bis(2-ethylhexyl) phthalate (effluent limitations for Outfall 001 only)	µg/l	--	--	--	2.8E+01
	lbs/day	--	--	--	2.9E-01
DDT (effluent limitations for Outfalls 001, 003, 004a, and 004b)	µg/l				1.36E-03
	lbs/day				1.4E-02
PAHs (effluent limitations for Outfalls 003, 004a, and 004b only)	µg/l	--	--	--	7.04E-02
	lbs/day	--	--	--	7.3E-04
TCDD Equivalents (effluent limitations for Outfalls 001, 003, 004a, and 004b)	µg/l	--	--	--	3.12E-08
	lbs/day	--	--	--	3.3E-10

1 See Attachment A for definitions of abbreviations and a glossary of common terms used in this Order.

2 Mass-based effluent limitations are based on the flow prohibition of 1.25 MGD (section III.F of this Order): Parameter Concentration (mg/L) x Flow Limit (MGD) x 8.34 (conversion factor) = Mass-based Performance Goal expressed as lbs/day. The mass-based effluent limitations apply to the total mass emission rate from Outfall 001, 003, 004a, and 004b: measured concentration-Outfall 001 (mg/L) x measured flow-Outfall 001 (MGD) + measured concentration-Outfall 003 (mg/L) x estimated/measured flow-Outfall 003 (MGD) + measured concentration-Outfall 004a (mg/L) x estimated/measured flow-

Outfall 004a (mg/L) (MGD) + measured concentration-Outfall 004b x estimated/measured flow-Outfall 004b (MGD) x 8.34 (conversion factor) = calculated mass-based emission rate (lbs/day).

3 Scientific "E" notation is used to express certain values. In scientific "E" notation, the number following the "E" indicates that position of the decimal point in the value. Negative numbers after the "E" indicate that the value is less than 1, and positive numbers after the "E" indicate that the value is greater than 1. In this notation a value of 6.1E-02 represents 6.1×10^{-2} or 0.061, 6.1E+02 represents 6.1×10^{2} or 610, and 6.1E+00 represents 6.1×10^{0} or 6.1.

4 A numeric WQBEL is established because effluent data showed that there was reasonable potential for the effluent to cause or contribute to an exceedance of the chronic toxicity water quality objective. The chronic toxicity final effluent limitation is protective of both the numeric acute toxicity and the narrative toxicity Basin Plan water quality objectives. These final effluent limitations will be implemented using the *Short Term Methods for Estimating the Chronic Toxicity of Effluents and Receiving Waters to Freshwater Organisms* (USEPA 2002, EPA-821-R-02-013), current USEPA guidance in National Pollutant Discharge Elimination System Test of Significant Toxicity Implementation Document (EPA 833-R-10-003, June /2010) and EPA Regions 8, 9 and 10 Toxicity Training Tool (January 2010), http://www2.epa.gov/region8/epa-regions-8-9-and-10-toxicity-training-tool-january-2010.

5 As specified in section VII.J of this Order and section III.C of the Monitoring and Reporting Program, Attachment E.

6 The Median Monthly Effluent Limitation for chronic toxicity shall only apply when there is a discharge more than one day in a calendar month period. During such calendar months, up to three independent toxicity tests may be conducted when one toxicity test results in "Fail".

a. Effluent shall not contain substances that float or become floatable upon discharge.

b. Effluent shall not contain settleable material or substances that may form sediments which will degrade benthic communities or other aquatic life.

c. Effluent shall not contain substances that will accumulate to toxic levels in marine waters, sediments, or biota.

d. Effluent shall not contain substances that significantly decrease the natural light to benthic communities and other marine life.

e. Effluent shall not contain materials that result in aesthetically undesirable discoloration of the ocean surface.

f. Effluent shall contain minimal concentrations of chemical additives, including antibiotics, to prevent the alteration of natural water quality conditions in the receiving water.

2. Performance Goals

Outfalls 001, 003, 004a, and 004b. Parameters that do not have reasonable potential to cause or contribute to an exceedance of water quality objectives, or for which reasonable potential to cause or contribute to an exceedance of water quality objectives cannot be determined, are referred to as performance goal parameters and are assigned the performance goals listed in Table 10 below. Performance goal parameters for Outfalls 001, 003, 004a, and 004b shall be monitored at Monitoring Locations EFF-001, EFF-003, EFF-004a, and EFF-004b, respectively, as described in the Monitoring and Reporting Program, Attachment E. The San Diego Water Board will use the results for informational purposes only, not compliance determinations.

Outfall 002. Performance goal parameters for Outfall 002 shall be monitored at Monitoring Location EFF-002, as described in the Monitoring and Reporting Program, Attachment E.

The Discharger shall include an attachment in the semiannual self-monitoring report which 1) lists the parameters that exceeded the performance goals in Table 10 below at Monitoring Location EFF-002, if any; 2) describes best management practices (BMPs) that are currently being implemented, BMPs that are planned for in the Storm Water Management Plan (SWMP), and additional BMPs that may be added to the SWMP; and 3) includes a new or modified implementation schedule. The reporting schedule for the semiannual self-monitoring report is contained in Attachment E, table E-9.

Within 30 days following submittal of the semiannual self-monitoring report, the Discharger shall revise its SWMP to incorporate any new or modified BMPs that have been and will be implemented, the implementation schedule, and any additional monitoring required. The implementation of any new or modified BMPs must be within one year of submittal to the San Diego Water Board. The San Diego Water Board may, for good cause, approve a longer time period for structural BMPs. In any event, a schedule longer than one year must be as short as practicable, as determined by the San Diego Water Board.

Table 6. Performance Goals for Outfalls 001, 002, 003, 004a, and 004b[1,2,3]

Parameter	Unit	6-Month Median	Maximum Daily	Instantaneous Maximum	30-Day Average
Based On Ocean Plan Objectives For Protection Of Marine Aquatic Life					
Arsenic, Total Recoverable	µg/L	4.3 E+01	2.4 E+02	6.2E+02	--
Cadmium, Total Recoverable	µg/L	8.0 E+00	3.2 E+01	8.0 E+01	--
Chromium VI, Total Recoverable[4] (except for Outfall 004b, which has effluent limitations)	µg/L	1.6 E+01	6.4 E+01	1.6 E+02	--
Copper, Total Recoverable (except for Outfalls 001 and 003, which have effluent limitations)	µg/L	1.0 E+01	8.2 E+01	2.26 E+02	--
Lead, Total Recoverable (except for Outfall 003, which has effluent limitations)	µg/L	1.6 E+01	6.4 E+01	1.6 E+02	--
Mercury, Total Recoverable	µg/L	3.2E-01	1.2E+00	3.2E+00	
Nickel, Total Recoverable	µg/L	4.0 E+01	1.6 E+02	4.0E+02	--
Selenium, Total Recoverable	µg/L	1.2 E+02	4.8 E+02	1.2 E+03	--
Silver, Total Recoverable	µg/L	4.48E+00	2.1E+01	5.5E+01	--
Zinc, Total Recoverable	µg/L	1.04E+02	5.84E+02	1.54E+03	--
Cyanide, Total Recoverable	µg/L	8E+00	3.2E+01	8.0E+01	--
Total Chlorine Residual	µg/L	1.6E+01	6.4E+01	4.80E+02	--
Ammonia (expressed as nitrogen)	µg/L	4.8E+03	1.92E+04	4.8E+04	--
Chronic Toxicity (except for Outfalls 003 and 004a, which have effluent limitations)	Pass/Fail, % Effect (Test of Significant Toxicity)	--	Pass or % effect <50[4]	--	Pass[5]

Parameter	Unit	6-Month Median	Maximum Daily	Instantaneous Maximum	30-Day Average
Phenolic Compounds (non-chlorinated)	µg/L	2.40E+02	9.60E+02	2.40E+03	--
Chlorinated Phenolics	µg/L	8.0E+00	3.2E+01	8.0E+01	--
Endosulfan	µg/L	7.2E-02	1.44E-01	2.16E-01	--
Endrin	µg/L	1.6 E-02	3.2 E-02	4.8 E-02	--
HCH[1]	µg/L	3.2 E-02	6.4 E-02	9.6 E-02	--
Radioactivity	pCi/l	Not to exceed limits specified in title 17, division 1, chapter 5, subchapter 4, group 3, article 3, section 30253 of the California Code of Regulations, Reference to section 30253 is prospective, including future changes to any incorporated provisions of federal law, as the changes take effect.			
BASED ON OCEAN PLAN OBJECTIVES FOR PROTECTION OF HUMAN HEALTH – NONCARCINOGENS					
Acrolein	µg/L	--	--	--	1.76E+03
Antimony, Total Recoverable	µg/L	--	--	--	9.60E+03
Bis(2-chloroethoxy) Methane	µg/L	--	--	--	3.52E+01
Bis(2-chloroisopropyl) Ether	µg/L	--	--	--	9.60E+03
Chlorobenzene	µg/L	--	--	--	4.56E+03
Chromium (III) , Total Recoverable	µg/L	--	--	--	1.52E+06
Di-n-butyl Phthalate	µg/L	--	--	--	2.80E+04
Dichlorobenzenes	µg/L	--	--	--	4.08E+04
Diethyl Phthalate	µg/L	--	--	--	2.64E+05
Dimethyl Phthalate	µg/L	--	--	--	6.56E+06
4,6-dinitro-2-methylphenol	µg/L	--	--	--	1.76E+03
2,4-dinitrophenol	µg/L	--	--	--	3.20E+01
Ethylbenzene	µg/L	--	--	--	3.28E+04
Fluoranthene	µg/L	--	--	--	1.20E+02
Hexachlorocyclopentadiene	µg/L	--	--	--	4.64E+02
Nitrobenzene	µg/L	--	--	--	3.92E+01
Thallium	µg/L	--	--	--	1.60E+01
Toluene	µg/L	--	--	--	6.80E+05
Tributyltin	µg/L	--	--	--	1.12E-02
1,1,1-trichloroethane	µg/L	--	--	--	4.32E+06
BASED ON OCEAN PLAN OBJECTIVES FOR PROTECTION OF HUMAN HEALTH - CARCINOGENS					
Acrylonitrile	µg/L	--	--	--	8.00E-01
Aldrin	µg/L	--	--	--	1.76E-04

Parameter	Unit	6-Month Median	Maximum Daily	Instantaneous Maximum	30-Day Average
Benzene	µg/L	--	--	--	4.72E+01
Benzidine	µg/L	--	--	--	5.52E-04
Beryllium, Total Recoverable	µg/L	--	--	--	2.64E-01
Bis(2-chloroethyl) Ether	µg/L	--	--	--	3.60E-01
Bis(2-ethlyhexyl) Phthalate (except for Outfall 001, which has effluent limitations)	µg/L	--	--	--	2.80E+01
Carbon Tetrachloride	µg/L	--	--	--	7.20E+00
Chlordane	µg/L	--	--	--	1.84E-04
Chlorodibromomethane	µg/L	--	--	--	6.88E+01
Chloroform	µg/L	--	--	--	1.04E+03
DDT (except for Outfalls 001, 003, 004a, and 004b, which have effluent limitations)	µg/L	--	--	--	1.36E-03
1,4-dichlorobenzene	µg/L	--	--	--	1.44E+02
3,3'-dichlorobenzidine	µg/L	--	--	--	6.48E-02
1,2-dichloroethane	µg/L	--	--	--	2.24E+02
1,1-dichloroethylene	µg/L	--	--	--	7.20E+00
Dichlorobromomethane	µg/L	--	--	--	4.96E+01
Dichloromethane (Methylene Chloride)	µg/L	--	--	--	3.60E+03
1,3-dichloropropene (1,3-Dichloropropylene)	µg/L	--	--	--	7.12E+01
Dieldrin	µg/L	--	--	--	3.20E-04
2,4-dinitrotoluene	µg/L	--	--	--	2.08E+01
1,2-diphenylhydrazine	µg/L	--	--	--	1.28E+00
Halomethanes	µg/L	--	--	--	1.04E+03
heptachlor	µg/L	--	--	--	4.00E-04
heptachlor epoxide	µg/L	--	--	--	1.60E-04
hexachlorobenzene	µg/L	--	--	--	1.68E-03
Hexachlorobutadiene	µg/L	--	--	--	1.12E+02
Hexachloroethane	µg/L	--	--	--	2.00E+01
Isophorone	µg/L	--	--	--	5.84E+03
N-nitrosodimethylamine	µg/L	--	--	--	5.84E+01
N-nitrosodi-N-propylamine	µg/L	--	--	--	3.04E+00
N-nitrosodiphenylamine	µg/L	--	--	--	2.00E+01
PAHs[1] (except for Outfalls 003, 004a, and 004b, which have effluent limitations)	µg/L	--	--	--	7.04E-02
PCBs	µg/L	--	--	--	1.52E-04

Parameter	Unit	6-Month Median	Maximum Daily	Instantaneous Maximum	30-Day Average
TCDD equivalents (except for Outfalls 001, 003, 004a, and 004b, which have effluent limitations)	µg/L	--	--	--	3.12E-08
1,1,2,2-tetrachloroethane	µg/L	--	--	--	1.84E+01
Tetrachloroethylene (Tetrachloroethene)	µg/L	--	--	--	1.60E+01
Toxaphene	µg/L	--	--	--	1.68E-03
Trichloroethylene (Trichloroethene)	µg/L	--	--	--	2.16E+02
1,1,2-trichloroethane	µg/L	--	--	--	7.52E+01
2,4,6-trichlorophenol	µg/L	--	--	--	2.32E+00
Vinyl Chloride	µg/L	--	--	--	2.88E+02

1 See Attachment A for definitions of abbreviations and a glossary of common terms used in this Order.

2 Scientific "E" notation is used to express certain values. In scientific "E" notation, the number following the "E" indicates the position of the decimal point in the value. Negative numbers after the "E" indicate that the value is less than 1, and positive numbers after the "E" indicate that the value is greater than 1. In this notation a value of 6.1E-02 represents 6.1×10^{-2} or 0.061, 6.1E+02 represents 6.1×10^{2} or 610, and 6.1E+00 represents 6.1×10^{0} or 6.1.

3 The concentration-based performance goals stated in the table above are also applicable as mass-based performance goals expressed as lbs/day which are calculated as follows using the maximum flow rates described in section II.B of the Fact Sheet: Parameter Concentration (µg/L) x Flow Limit (MGD) x 0.00834 (conversion factor) = Mass-based Performance Goal expressed as lbs/day. The Flow Limit (MGD) values used in this equation are as follows: Outfall 001 – 0.7 MGD; Outfall 002 – storm water only/not applicable/no maximum flow rate for Outfall 002; Outfall 003 – 0.35 MGD; Outfall 004a – 0.019 MGD; and Outfall 004b – 0.060 MGD.

4 As specified in section VII.J of this Order and section III.C of the Monitoring and Reporting Program, Attachment E.

5 The Median Monthly performance goal for chronic toxicity shall only apply when there is a discharge more than one day in a calendar month period. During such calendar months, up to three independent toxicity tests may be conducted when one toxicity test results in "Fail".

B. Land Discharge Specifications – Not Applicable

C. Reclamation Specifications – Not Applicable

V. RECEIVING WATER LIMITATIONS

Receiving water limitations are based on water quality objectives contained in the Basin Plan and Ocean Plan and are a required part of this Order.

A. Surface Water Limitations

1. Bacterial Characteristics

a. Within a zone bounded by the shoreline and a distance of three nautical miles from the shoreline, including all kelp beds, the following bacterial objectives shall be maintained throughout the water column.

i. 30-day Geometric Mean – The following standards are based on the geometric mean of the five most recent samples from each site:

(a) Total coliform density shall not exceed 1,000 per 100 ml;

(b) Fecal coliform density shall not exceed 200 per 100 ml; and

(c) Enterococcus density shall not exceed 35 per 100ml.

ii. Single Sample Maximum:

(a) Total coliform density shall not exceed 10,000 per 100 ml;

(b) Fecal coliform density shall not exceed 400 per 100ml;

(c) Enterococcus density shall not exceed 104 per 100 ml; and

(d) Total coliform density shall not exceed 1,000 per 100 ml when the fecal coliform/total coliform ratio exceeds 0.1.

b. The “Initial Dilution Zone” of wastewater outfalls shall be excluded from designation as "kelp beds” for purposes of bacterial standards. Adventitious assemblages of kelp plants on waste discharge structures (e.g., outfall pipes and diffusers) do not constitute kelp beds for purposes of bacterial standards.

c. At all areas where shellfish may be harvested for human consumption, as determined by the San Diego Water Board, the median total coliform density shall not exceed 70 per 100 ml throughout the water column, and not more than 10 percent of the samples shall exceed 230 per 100 ml.

2. Physical Characteristics

a. Floating particulates and grease and oil shall not be visible.

b. The discharge of waste shall not cause aesthetically undesirable discoloration of the ocean surface.

c. Natural light shall not be significantly reduced at any point outside the initial dilution zone as the result of the discharge of waste.

d. The rate of deposition of inert solids and the characteristics of inert solids in ocean sediments shall not be changed such that benthic communities are degraded.

3. Chemical Characteristics

a. The dissolved oxygen concentration shall not at any time be depressed more than 10 percent from that which occurs naturally, as the result of the discharge of oxygen demanding waste materials.

b. The pH shall not be changed at any time more than 0.2 units from that which occurs naturally.

c. The dissolved sulfide concentration of waters in and near sediments shall not be significantly increased above that present under natural conditions.

d. The concentration of substances set forth in chapter II, Table 1 of the Ocean Plan, in marine sediments shall not be increased to levels which would degrade indigenous biota.

e. The concentration of organic materials in marine sediments shall not be increased to levels that would degrade marine life.

f. Nutrient materials shall not cause objectionable aquatic growths or degrade indigenous biota.

4. Biological Characteristics

a. Marine communities, including vertebrate, invertebrate, and plant species, shall not be degraded.

b. The natural taste, odor, color of fish, shellfish, or other marine resources used for human consumption shall not be altered.

c. The concentration of organic materials in fish, shellfish, or other marine resources used for human consumption shall not bioaccumulate to levels that are harmful to human health.

5. Radioactivity

Discharge of radioactive waste shall not degrade marine life.

6. Natural Water Quality Conditions

Natural water quality conditions in the receiving water, seaward of the surf zone, shall not be altered as a result of the discharge. The surf zone is defined as the area between the breaking waves and the shoreline at any one time. Natural water quality is defined as: that water quality (based on selected physical chemical and biological characteristics) that is required to sustain marine ecosystems, and which is without apparent human influence, i.e., an absence of significant amounts of:

a. man-made constituents (e.g., DDT);

b. other chemical (e.g., trace metals), physical (temperature/thermal pollution, sediment burial), and biological (e.g., bacteria) constituents at concentrations that have been elevated due to man's activities above those resulting from the naturally occurring processes that affect the area in question; and

c. non-indigenous biota (e.g., invasive algal bloom species) that has been introduced either deliberately or accidentally by man.

B. Groundwater Limitations – Not Applicable

VI. PROVISIONS

A. Standard Provisions

In the event that there is any conflict, duplication, or overlap between provisions specified by this Order, the more stringent provision shall apply:

1. The Discharger shall comply with all Standard Provisions included in Attachment D of this Order.

2. The Discharger shall comply with all applicable federal, state, and local laws and regulations for handling, transport, treatment, and disposal of waste or the discharge of waste to waters of the State in a manner which causes or threatens to cause conditions of pollution, contamination, or nuisance as those terms are defined in Water Code section 13050.

3. Failure to comply with provisions or requirements of this Order, or violation of other applicable laws or regulations governing discharges from this Facility, may subject the Discharger to administrative or civil liabilities, criminal penalties, and/or other enforcement remedies to ensure compliance. Additionally, certain violations may subject the Discharger to civil or criminal enforcement from appropriate local, state, or federal law enforcement entities.

4. This Order expires on December 31, 2020, after which, the terms and conditions of this permit are automatically continued pending issuance of a new permit, provided that all

requirements of USEPA's NPDES regulations of the Code of Federal Regulations, title 40 (40 CFR) section 122.6 and the State's regulations at title 23, section 2235.4 of the California Code of Regulations (CCR) regarding the continuation of expired permits and WDRs are met.

5. A copy of this Order shall be posted at a prominent location at or near the treatment and disposal facilities and shall be available to the San Diego Water Board, State Water Board, USEPA, and operating personnel at all times.

B. Monitoring and Reporting Program (MRP) Requirements

The Discharger shall comply with the MRP, and future revisions thereto, in Attachment E of this Order.

C. Special Provisions

1. Reopener Provisions

a. This Order may be reopened for modification to include an effluent limitation if monitoring establishes that the discharge causes, has the reasonable potential to cause, or contributes to an excursion above an Ocean Plan water quality objectives. [40 CFR section 122.44 (d)(1)]

b. This Order may be reopened for modification of the receiving water monitoring and reporting requirements and/or special studies requirements of this Order for cause, including but not limited to a) revisions necessary to implement recommendations from Southern California Coastal Water Research Project (SCCWRP); b) revisions necessary to develop, refine, implement, and/or coordinate a regional monitoring program; and/or c) revisions necessary to develop and implement improved monitoring and assessment programs in keeping with San Diego Water Board Resolution No. R9-2012-0069, *Resolution in Support of a Regional Monitoring Framework*.

c. This Order may be modified, revoked and reissued, or terminated for cause including, but not limited to, the following;

i. Violation of any terms or conditions of this Order. [Water Code section13381(a)]

ii. Obtaining this Order by misrepresentation or failure to disclose fully all relevant fact. [Water Code section13381(b)]

iii. A change in any condition that requires either a temporary or permanent reduction or elimination of the authorized discharge. [Water Code section13381(c)]

d. If any applicable toxic effluent standard or prohibition (including any schedule of compliance specified in such effluent standard or prohibition) is promulgated under section 307 (a) of the CWA for a toxic pollutant and that standard or prohibition if more stringent than any limitation on the pollutant in this Order, the San Diego Water Board may institute proceedings under these regulations to modify or revoke and reissue the Order to conform to the toxic effluent standard or prohibition. [40 CFR section 122.4 (b)(1)]

e. This Order may be reopened and modified, in accordance with the provisions set forth in 40 CFR parts 122 and 124, to include new Minimum Levels (MLs) which are established in the Ocean Plan.

f. This Order may be reopened and modified to revise effluent limitations as a result of future Basin Plan Amendments, or the adoption of a total maximum daily load allocation (TMDL) for the receiving water. [40 CFR section 122.62 (a)(2)]

g. This Order may also be reopened and modified, revoked and, reissued or terminated in accordance with the provisions of 40 CFR sections 122.44, 122.62 to 122.64, and 125.62. Causes for taking such actions include, but are not limited to, failure to comply with any condition of this Order and permit, and endangerment to human health or the environment resulting from the permitted activity.

2. Special Studies, Technical Reports and Additional Monitoring Requirements

SIO Building D. The Discharger shall notify the San Diego Water Board at least 90 days prior to discharge from the SIO Building D to Outfall 001. The notification shall provide details of the seawater discharge category (or categories) proposed to be discharged to Outfall 001, any chemical additive(s) proposed to be used in the SIO Building D, and any proposed treatment prior to discharge to Outfall 001.

3. Best Management Practices and Pollution Prevention

a. **Storm Water Management Plan.** The Discharger shall submit a revised Storm Water Management Plan (SWMP) within six months of the adoption date of this Order. The SWMP shall:

i. Address the prohibition of non-storm water urban runoff, except associated with emergency firefighting, and the reduction of pollutants in storm water discharges draining to the ASBS;

ii. Include a map of all entry points for urban runoff entering the Facility's drainage system;

iii. Include a procedure for updating the map and plan when other entry points are discovered;

iv. Describe the measures by which non-storm water discharges will be eliminated and interim measures that will be employed to reduce non-storm water flows until the ultimate measures are implemented;

v. Address storm water discharges and how pollutants will be reduced in storm water runoff into the ASBS through the implementation of Best Management Practices (BMPs) or on-site treatment to prevent alteration of natural water quality conditions;

vi. Include an implementation schedule to ensure that non-structural BMPs are implemented within one year of the approval date of the revised SWMP by the San Diego Water Board; and

vii. Implement any necessary revisions to its SWMP to comply with the requirements in the Phase II Small Municipal Separate Storm Sewer Systems (MS4) General Permit, Order No. 2013-0001 DWQ.

Prior to development and submittal of a revised SWMP, the Discharger shall continue to implement the previous SWMP. The SWMP is subject to the approval of this San Diego Water Board.

b. **Non-indigenous Species**

The Discharger shall maintain administrative and/or engineering controls that result in a negligible risk of the release of exotic species, including foreign pathogens (parasites, protozoa, bacteria, and viruses) according to the "*Non – Indigenous Species Pilot Treatment Study Results for Scripps Institution of Oceanography and the Stephen Birch Aquarium at Scripps*."

4. Construction, Operation and Maintenance Specifications – Not Applicable

5. Special Provisions for Municipal Facilities (Publicly-Owned Treatment Works Only) – Not Applicable

6. Other Special Provisions – Not Applicable

7. Compliance Schedules – Not Applicable

VII. COMPLIANCE DETERMINATION

A. Compliance with Average Monthly Effluent Limitation (AMEL)

If the average of daily discharges over a calendar month exceeds the AMEL for a given parameter, an alleged violation will be flagged and the Discharger will be considered out of compliance for each day of that month for that parameter (e.g., resulting in 31 days of noncompliance in a 31-day month). The average of daily discharges over the calendar month that exceeds the AMEL for a parameter will be considered out of compliance for the month only. If only a single sample is taken during the calendar month and the analytical result for that sample exceeds the AMEL, the Discharger will be considered out of compliance for that calendar month. For any one calendar month during which no sample (daily discharge) is taken, no compliance determination can be made for that calendar month.

B. Compliance with Average Weekly Effluent Limitation (AWEL)

If the average of daily discharges over a calendar week (Sunday through Saturday) exceeds the AWEL for a given parameter, an alleged violation will be flagged and the Discharger will be considered out of compliance for each day of that week for that parameter, resulting in seven days of noncompliance. The average of daily discharges over the calendar week that exceeds the AWEL for a parameter will be considered out of compliance for that week only. If only a single sample is taken during the calendar week and the analytical result for that sample exceeds the AWEL, the Discharger will be considered out of compliance for that calendar week. For any one calendar week during which no sample (daily discharge) is taken, no compliance determination can be made for that calendar week.

C. Compliance with Maximum Daily Effluent Limitation (MDEL)

The MDEL shall apply to flow weighted 24-hour composite samples, or grab, as specified in the Monitoring and Reporting Program, Attachment E. If a daily discharge exceeds the MDEL for a given parameter, an alleged violation will be flagged and the Discharger will be considered out of compliance for that parameter for that one day only within the reporting period. For any one day during which no sample is taken, no compliance determination can be made for that day.

D. **Compliance with Instantaneous Minimum Effluent Limitation**

The instantaneous minimum effluent concentration limitation shall apply to grab sample determinations. If the analytical result of a single grab sample is lower than the instantaneous minimum effluent limitation for a parameter, a violation will be flagged and the Discharger will be considered out of compliance for that parameter for that single sample. Non-compliance for each sample will be considered separately (e.g., the results of two grab samples taken within a calendar day that both are lower than the instantaneous minimum effluent limitation would result in two instances of noncompliance with the instantaneous minimum effluent limitation.)

E. **Compliance with Instantaneous Maximum Effluent Limitation**

The instantaneous maximum effluent concentration limitation shall apply to grab sample determinations. If the analytical result of a single grab sample is higher than the instantaneous maximum effluent limitation for a parameter, a violation will be flagged and the Discharger will be considered out of compliance for that parameter for that single sample. Non-compliance for each sample will be considered separately (e.g., the results of two grab samples taken within a calendar day that both exceed the instantaneous maximum effluent limitation would result in two instances of noncompliance with the instantaneous maximum effluent limitation).

F. **Compliance with 6-Month Median Effluent Limitation**

If the median of daily discharges over any 180-day period exceeds the 6-month median effluent limitation for a given parameter, an alleged violation will be flagged and the Discharger will be considered out of compliance for each day of that 180-day period for that parameter. The next assessment of compliance will occur after the next sample is taken. If only a single sample is taken during a given 180-day period and the analytical result for that sample exceeds the 6- month median, the Discharger will be considered out of compliance for the 180-day period. For any 180-day period during which no sample is taken, no compliance determination can be made for the 6-month median limitation.

G. **Mass and Concentration Limitations**

Compliance with mass and concentration effluent limitations for the same parameter shall be determined separately with their respective limitations. When the concentration of a constituent in an effluent sample is determined to be “Not Detected” (ND) or “Detectable but not quantifiable” (DNQ), the corresponding mass emission rate (MER) determined from that sample concentration shall also be reported as “ND” or “DNQ”.

H. **Ocean Plan Provisions for Table 1 Constituents**

Sufficient sampling and analysis shall be required to determine compliance with the effluent limitation.

1. **Compliance with Single-constituent Effluent Limitations**

The Discharger shall be deemed out of compliance with an effluent limitation or discharge specification if the concentration of the constituent in the monitoring sample is greater than the effluent limitation or discharge specification and greater than or equal to the ML.

2. Compliance with Effluent Limitations Expressed as a Sum of Several Constituents

The Discharger is out of compliance with an effluent limitation that applies to the sum of a group of chemicals (e.g., PCBs) if the sum of the individual pollutant concentrations is greater than the effluent limitation. Individual pollutants of the group will be considered to have a concentration of zero if the constituent is reported as ND or DNQ.

3. Multiple Sample Data Reduction.

The concentration of the pollutant in the effluent may be estimated from the result of a single sample analysis or by a measure of central tendency (arithmetic mean, geometric mean, median, etc.) of multiple sample analyses when all sample results are quantifiable (i.e., greater than or equal to the reported ML). When one or more sample results are reported as ND or DNQ, the central tendency concentration of the pollutant shall be the median (middle) value of the multiple samples. If, in an even number of samples, one or both of the middle values is ND or DNQ, the median will be the lower of the two middle values.

4. Mass Emission Rate (MER)

The MER, in pounds per day, shall be obtained from the following calculation for any calendar day:

MER (lbs/day) = 8.34 x Q x C

In which Q and C are the flow rate in MGD and the constituent concentration in mg/L, respectively, and 8.34 is a conversion factor (lbs/gallon of water). If a composite sample is taken, then C is the concentration measured in the composite sample and Q is the average flow rate occurring during the period over which the samples are composited.

I. **Bacterial Standards and Analysis**

1. The geometric mean used for determining compliance with bacterial standards is calculated with the following equation:

Geometric Mean = $(C_1 \times C_2 \times \ldots \times C_n)^{1/n}$

Where n is the number of days samples were collected during the period and C is the concentration of bacteria (CFU/100 mL) found on each day of sampling.

2. For all bacterial analyses, sample dilutions should be performed so the range of values extends from two to 16,000 CFU (colony-forming units). The detection methods used for each analysis shall be reported with the results of the analysis. Detection methods used for coliforms (total and fecal) shall be those listed in 40 CFR part 136 or any improved method determined by the San Diego Water Board (and approved by USEPA) to be appropriate. Detection methods used for enterococcus shall be those presented in the publication USEPA 600/4-85/076, *Test Methods for Escherichia coli and Enterococci in Water by Membrane Filter Procedure*, listed under 40 CFR part 136, and any other method approved by the San Diego Water Board.

J. **Chronic Toxicity**

The discharge is subject to determination of “Pass” or “Fail” from a chronic toxicity test using the Test of Significant Toxicity (TST) statistical t-test approach described in *National Pollutant Discharge Elimination System Test of Significant Toxicity Implementation Document* (EPA 833-R-10-003, 2010), Appendix A, Figure A-1 and Table A-1, and Appendix B, Table B-1. The null hypothesis (Ho) for the TST statistical approach is: Mean discharge In-stream Waste

Concentration (IWC) response ≤ 0.75 × Mean control response. A test result that rejects this null hypothesis is reported as "Pass". A test result that does not reject this null hypothesis is reported as "Fail". The relative "Percent Effect" at the discharge IWC is defined and reported as: ((Mean control response - Mean discharge IWC response) ÷ Mean control response)) × 100. This is a t-test (formally Student's t-Test), a statistical analysis comparing two sets of replicate observations—in the case of Whole Effluent Toxicity (WET), only two test concentrations (i.e., a control and IWC). The purpose of this statistical test is to determine if the means of the two sets of observations are different (i.e., if the IWC or receiving water concentration differs from the control (the test result is "Pass" or "Fail")). The Welch's t-test employed by the TST statistical approach is an adaptation of Student's t-test and is used with two samples having unequal variances.

The MDEL for chronic toxicity is exceeded and a violation will be flagged when a chronic toxicity test, analyzed using the TST statistical approach, results in "Fail" and the "Percent Effect" is ≥0.50.

The Median Monthly Effluent Limitation (MMEL) for chronic toxicity is exceeded and a violation will be flagged when the median of no more than three independent chronic toxicity tests, conducted within the same calendar month and analyzed using the TST statistical approach, results in "Fail". The MMEL for chronic toxicity shall only apply when there is a discharge more than one day in a calendar month period. During such calendar months, up to three independent toxicity tests may be conducted when one toxicity test results in "Fail".

The chronic toxicity MDEL and MMEL are set at the IWC for the discharge (14 percent effluent) and expressed in units of the TST statistical approach ("Pass" or "Fail", "Percent Effect"). All NPDES effluent compliance monitoring for the chronic toxicity MDEL and MMEL shall be reported using the 14 percent effluent concentration and negative control, expressed in units of the TST. The TST hypothesis (Ho) (see above) is statistically analyzed using the IWC and a negative control. Effluent toxicity tests shall be run using a multi-concentration test design when required by *Short-term Methods for Estimating the Chronic Toxicity of Effluents and Receiving Waters to Marine and Estuarine Organisms, Third Edition* (USEPA 2002, EPA-821-R-02-014). The San Diego Board's review of reported toxicity test results will include review of concentration-response patterns as appropriate (see Fact Sheet discussion at IV.C.5). As described in the bioassay laboratory audit directives to the San Jose Creek Water Quality Laboratory from the State Water Resources Control Board dated August 7, 2014, and from the USEPA dated December 24, 2013, the Percent Minimum Significant Difference (PMSD) criteria only apply to compliance reporting for the No Observed Effect Concentration (NOEC) and the sublethal statistical endpoints of the NOEC, and therefore are not used to interpret TST results. Standard Operating Procedures used by the toxicity testing laboratory to identify and report valid, invalid, anomalous, or inconclusive effluent (and receiving water) toxicity test measurement results from the TST statistical approach, including those that incorporate a consideration of concentration-response patterns, must be submitted to the San Diego Water Board (40 CFR section 122.41(h)). The San Diego Water Board will make a final determination as to whether a toxicity test result is valid, and may consult with the Discharger, USEPA, the State Water Board's Quality Assurance Officer, or the State Water Board's Environmental Laboratory Accreditation Program as needed. The Board may consider results of any Toxicity Reduction Evaluation / Toxicity Identification Evaluation (TRE/TIE) studies in an enforcement action.

ATTACHMENT A – DEFINITIONS

Part 1 – Abbreviations

Abbreviation	Definition
40 CFR	Code of Federal Regulations, title 40
ASBS	Areas of Special Biological Significance
Basin Plan	Water Quality Control Plan for the San Diego Basin
BAT	Best Available Technology Economically Achievable
BCT	Best Conventional Pollutant Control Technology
BMPs	Best Management Practices
BPJ	Best Professional Judgment
BPT	Best Practicable Treatment Control Technology
CEQA	California Environmental Quality Act
CFR	Code of Federal Regulations
CFU	Colony Forming Units
CIWQS	California Integrated Water Quality System
CTR	California Toxics Rule
CWA	Clean Water Act
DDW	State Water Board's Division of Drinking Water
Dm	Initial Dilution
DMR	Discharger Monitoring Report
DNQ	Detected, but Not Quantified
ELAP	Environmental Laboratory Accreditation Program
ELGs	effluent limitation guidelines
gpd	gallons per day
Ho	null hypothesis
IWC	In-stream Waste Concentration
lbs/day	Pounds per Day
MDEL	Maximum Daily Effluent Limitation
MDL	Method Detection Limit
MESOM	Marine Ecosystem Sensing, Observation and Modeling Laboratory
MER	Mass Emission Rate
mg/L	Milligrams per Liter
MGD	Million Gallons per Day
ML	Minimum Level
ml/L	Milliliters per Liter
MMEL	Maximum Monthly Effluent Limitation
MPN	Most Probable Number
MRP	Monitoring and Reporting Program
MS4	Municipal Separate Storm Sewer System
ND	Not Detected
NIS	Non-Indigenous Species
NOEC	No Observed Effect Concentration
NPDES	National Pollutant Discharge Elimination System
Ocean Plan	California Ocean Plan, Water Quality Control Plan Ocean Waters Of California
PCB	Polychlorinated Biphenyls

Abbreviation	Definition
QA	Quality Assurance
REC-1	Contact Water Recreation Beneficial Use
ROWD	Report of Waste Discharge
RPA	Reasonable Potential Analysis
San Diego Water Board	California Regional Water Quality Control Board, San Diego Region
SCCWRP	Southern California Coastal Waters Research Project
SIO	Scripps Institution of Oceanography
SMR	Self-monitoring report
State Water Board	State Water Resources Control Board
SWMP	Storm Water Management Plan
TAC	test acceptability criteria
TBEL	Technology-Based Effluent Limitation
Thermal Plan	Water Quality Control Plan for Control of Temperature in the Coastal and Interstate Waters and Enclosed Bays and Estuaries
TIE	Toxicity Identification Evaluation
TMDL	Total Maximum Daily Load
TRE	Toxicity Reduction Evaluation
TSS	Total Suspended Solids
TST	Test of Significant Toxicity
U.S.	United States
USEPA	United Stated Environmental Protection Agency
Water Code	California Water Code
WDRs	Waste Discharge Requirements
WET	Whole Effluent Toxicity
WQBEL	Water Quality-Based Effluent Limitation
WQOs	Water Quality Objectives
µg	Microgram
µg/L	Micrograms per Liter

Part 2 – Definitions of Common Terms

Acute Toxicity

a. Acute Toxicity (TUa)

Expressed in Toxic Units Acute (TUa)

$$TUa = \frac{100}{96\text{-hr LC } 50\%}$$

b. Lethal Concentration 50% (LC 50)

LC 50 (percent waste giving 50% survival of test organisms) shall be determined by static or continuous flow bioassay techniques using standard marine test species as specified in Ocean Plan Appendix III. If specific identifiable substances in wastewater can be demonstrated by the discharger as being rapidly rendered harmless upon discharge to the marine environment, but not as a result of dilution, the LC 50 may be determined after the test samples are adjusted to remove the influence of those substances.

When it is not possible to measure the 96-hour LC 50 due to greater than 50 percent survival of the test species in 100 percent waste, the toxicity concentration shall be calculated by the expression:

$$TUa = \frac{\log (100 - S)}{1.7}$$

where:

S = percentage survival in 100% waste. If S > 99, TUa shall be reported as zero.

Areas of Special Biological Significance (ASBS)
Those areas designated by the State Water Board as ocean areas requiring protection of species or biological communities to the extent that alteration of natural water quality is undesirable. All Areas of Special Biological Significance are also classified as a subset of STATE WATER QUALITY PROTECTION AREAS.

Average Monthly Effluent Limitation (AMEL)
The highest allowable average of daily discharges over a calendar month, calculated as the sum of all daily discharges measured during a calendar month divided by the number of daily discharges measured during that month.

Average Weekly Effluent Limitation (AWEL)
The highest allowable average of daily discharges over a calendar week (Sunday through Saturday), calculated as the sum of all daily discharges measured during a calendar week divided by the number of daily discharges measured during that week.

Chlordane
Shall mean the sum of chlordane-alpha, chlordane-gamma, chlordene-alpha, chlordene-gamma, nonachlor-alpha, nonachlor-gamma, and oxychlordane.

Chronic Toxicity
This parameter shall be used to measure the acceptability of waters for supporting a healthy marine biota until improved methods are developed to evaluate biological response.

a. Chronic Toxicity (TUc)

Expressed as Toxic Units Chronic (TUc)

$$TUc = \frac{100}{NOEL}$$

b. No Observed Effect Level (NOEL)

The NOEL is expressed as the maximum percent effluent or receiving water that causes no observable effect on a test organism, as determined by the result of a critical life stage toxicity test listed in Ocean Plan Appendix II.

Daily Discharge
Daily Discharge is defined as either: (1) the total mass of the constituent discharged over the calendar day (12:00 am through 11:59 pm) or any 24-hour period that reasonably represents a calendar day for purposes of sampling (as specified in the permit), for a constituent with limitations expressed in units of mass or; (2) the unweighted arithmetic mean measurement of the constituent over the day for a constituent with limitations expressed in other units of measurement (e.g., concentration).

The daily discharge may be determined by the analytical results of a composite sample taken over the course of one day (a calendar day or other 24-hour period defined as a day) or by the arithmetic mean of analytical results from one or more grab samples taken over the course of the day.

For composite sampling, if one day is defined as a 24-hour period other than a calendar day, the analytical result for the 24-hour period will be considered as the result for the calendar day in which the 24-hour period ends.

DDT
Shall mean the sum of 4,4'DDT, 2,4'DDT, 4,4'DDE, 2,4'DDE, 4,4'DDD, and 2,4'DDD.

Degrade
Degradation shall be determined by comparison of the waste field and reference site(s) for characteristic species diversity, population density, contamination, growth anomalies, debility, or supplanting of normal species by undesirable plant and animal species. Degradation occurs if there are significant differences in any of three major biotic groups, namely, demersal fish, benthic invertebrates, or attached algae. Other groups may be evaluated where benthic species are not affected, or are not the only ones affected.

Detected, but Not Quantified (DNQ)
DNQ are those sample results less than the minimum level, but greater than or equal to the laboratory's MDL.

Dilution Credit
Dilution Credit is the amount of dilution granted to a discharge in the calculation of a water quality-based effluent limitation, based on the allowance of a specified mixing zone. It is calculated from the dilution ratio or determined through conducting a mixing zone study or modeling of the discharge and receiving water.

Enclosed Bays
Enclosed Bays means indentations along the coast that enclose an area of oceanic water within distinct headlands or harbor works. Enclosed bays include all bays where the narrowest distance between the headlands or outermost harbor works is less than 75 percent of the greatest dimension of the enclosed portion of the bay. Enclosed bays include, but are not limited to, Humboldt Bay, Bodega Harbor, Tomales Bay, Drake's Estero, San Francisco Bay, Morro Bay, Los Angeles-Long Beach Harbor, Upper and Lower Newport Bay, Mission Bay, and San Diego Bay. Enclosed bays do not include inland surface waters or ocean waters.

Estimated Chemical Concentration
The estimated chemical concentration that results from the confirmed detection of the substance by the analytical method below the ML value.

Estuaries
Estuaries means waters, including coastal lagoons, located at the mouths of streams that serve as areas of mixing for fresh and ocean waters. Coastal lagoons and mouths of streams that are temporarily separated from the ocean by sandbars shall be considered estuaries. Estuarine waters shall be considered to extend from a bay or the open ocean to a point upstream where there is no significant mixing of fresh water and seawater. Estuarine waters included, but are not limited to, the Sacramento-San Joaquin Delta, as defined in Water Code section 12220, Suisun Bay, Carquinez Strait downstream to the Carquinez Bridge, and appropriate areas of the Smith, Mad, Eel, Noyo, Russian, Klamath, San Diego, and Otay rivers. Estuaries do not include inland surface waters or ocean waters.

Inland Surface Waters
All surface waters of the State that do not include the ocean, enclosed bays, or estuaries.

Instantaneous Maximum Effluent Limitation
The highest allowable value for any single grab sample or aliquot (i.e., each grab sample or aliquot is independently compared to the instantaneous maximum limitation).

Instantaneous Minimum Effluent Limitation
The lowest allowable value for any single grab sample or aliquot (i.e., each grab sample or aliquot is independently compared to the instantaneous minimum limitation).

Maximum Daily Effluent Limitation (MDEL)
The highest allowable daily discharge of a pollutant, over a calendar day (or 24-hour period). For pollutants with limitations expressed in units of mass, the daily discharge is calculated as the total mass of the pollutant discharged over the day. For pollutants with limitations expressed in other units of measurement, the daily discharge is calculated as the arithmetic mean measurement of the pollutant over the day.

Median
The middle measurement in a set of data. The median of a set of data is found by first arranging the measurements in order of magnitude (either increasing or decreasing order). If the number of measurements (n) is odd, then the median = $X_{(n+1)/2}$. If n is even, then the median = $(X_{n/2} + X_{(n/2)+1})/2$ (i.e., the midpoint between the $n/2$ and $n/2+1$).

Method Detection Limit (MDL)
MDL is the minimum concentration of a substance that can be measured and reported with 99 percent confidence that the analyte concentration is greater than zero, as defined in title 40 of the Code of Federal Regulations, part 136, Attachment B, revised as of July 3, 1999.

Minimum Level (ML)
ML is the concentration at which the entire analytical system must give a recognizable signal and acceptable calibration point. The ML is the concentration in a sample that is equivalent to the concentration of the lowest calibration standard analyzed by a specific analytical procedure, assuming that all the method specified sample weights, volumes, and processing steps have been followed.

Mixing Zone
Mixing Zone is a limited volume of receiving water that is allocated for mixing with a wastewater discharge where water quality criteria can be exceeded without causing adverse effects to the overall water body.

Not Detected (ND)
Sample results which are less than the laboratory's MDL.

Ocean Waters
The territorial marine waters of the State as defined by California law to the extent these waters are outside of enclosed bays, estuaries, and coastal lagoons. Discharges to ocean waters are regulated in accordance with the State Water Board's California Ocean Plan.

Pollution Prevention
Pollution Prevention means any action that causes a net reduction in the use or generation of a hazardous substance or other pollutant that is discharged into water and includes, but is not limited to, input change, operational improvement, production process change, and product reformulation (as defined in Water Code section 13263.3). Pollution prevention does not include actions that merely shift a pollutant in wastewater from one environmental medium to another environmental medium, unless clear environmental benefits of such an approach are identified to the satisfaction of the State or San Diego Water Board.

Reporting Level (RL)
The reported ML (also known as the Reporting Level or RL) is the ML (and its associated analytical method) chosen by the Discharger for reporting and compliance determination from the MLs included in this Order, including an additional factor if applicable as discussed herein. The MLs included in this Order correspond to approved analytical methods for reporting a sample result that are selected by the <San Diego Water Board Name> either from Appendix II of the Ocean Plan in accordance with section III.C.5.a. of the Ocean Plan or established in accordance with section III.C.5.b. of the Ocean Plan. The ML is based on the proper application of method-based analytical procedures for sample preparation and the absence of any matrix interferences. Other factors may be applied to the ML depending on the specific sample preparation steps employed. For example, the treatment typically applied in cases where there are matrix-effects is to dilute the sample or sample aliquot by a factor of ten. In such cases, this additional factor must be applied to the ML in the computation of the reported ML.

Standard Deviation (σ)
Standard Deviation is a measure of variability that is calculated as follows:

$$\sigma = (\sum[(x - \mu)^2]/(n - 1))^{0.5}$$

where:
x is the observed value;
μ is the arithmetic mean of the observed values; and
n is the number of samples.

Surf Zone
As ocean surface waves come closer to shore they break, forming the foamy, bubbly surface called surf. The region of breaking waves defines the surf zone.

Toxicity Reduction Evaluation (TRE)
TRE is a study conducted in a step-wise process designed to identify the causative agents of effluent or ambient toxicity, isolate the sources of toxicity, evaluate the effectiveness of toxicity control options, and then confirm the reduction in toxicity. The first steps of the TRE consist of the collection of data relevant to the toxicity, including additional toxicity testing, and an evaluation of facility operations and maintenance practices, and best management practices. A Toxicity Identification Evaluation (TIE) may be required as part of the TRE, if appropriate. (A TIE is a set of procedures to identify the specific chemical(s) responsible for toxicity. These procedures are performed in three phases (characterization, identification, and confirmation) using aquatic organism toxicity tests.)

ATTACHMENT B – MAP

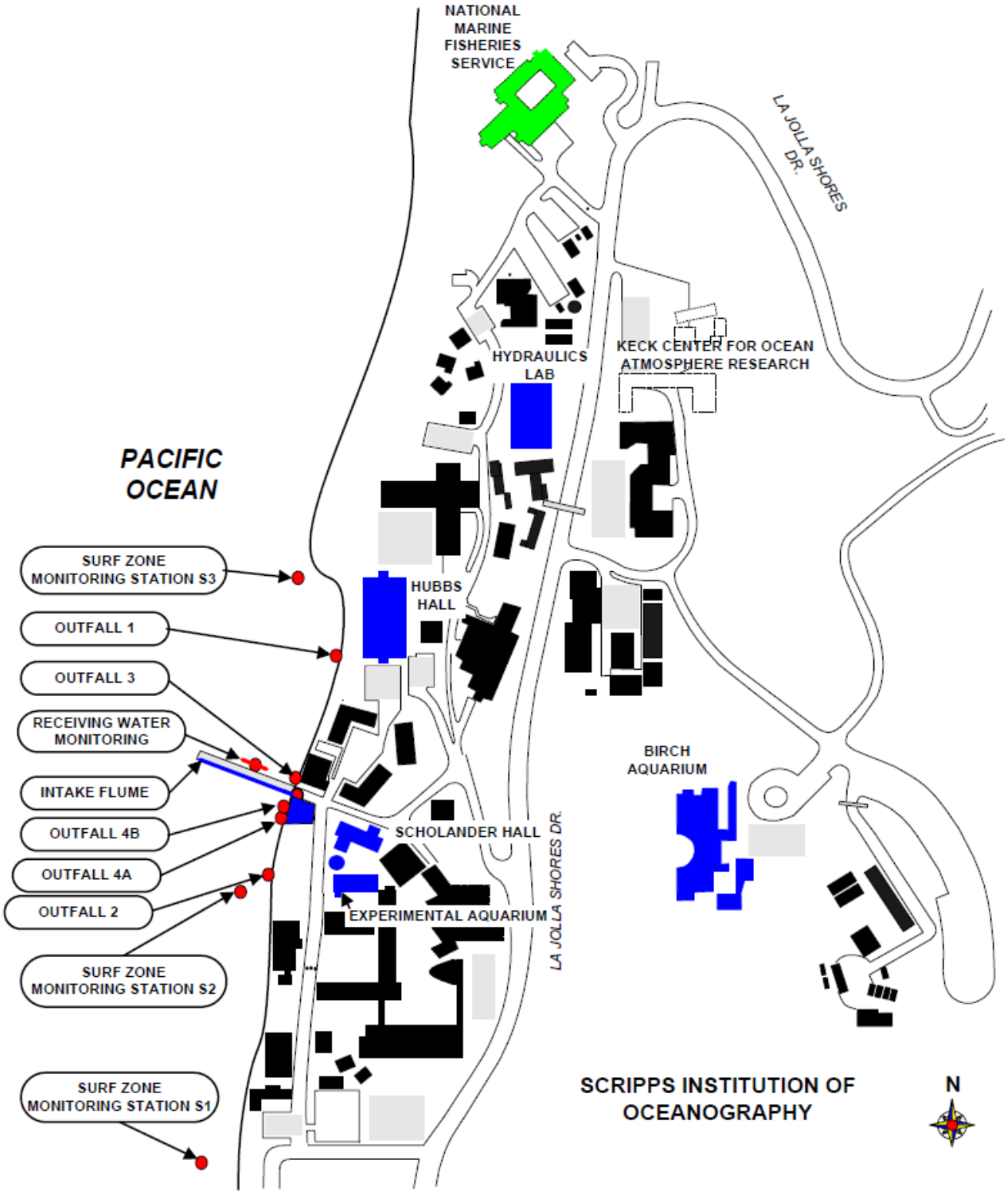

ATTACHMENT C – FLOW SCHEMATIC

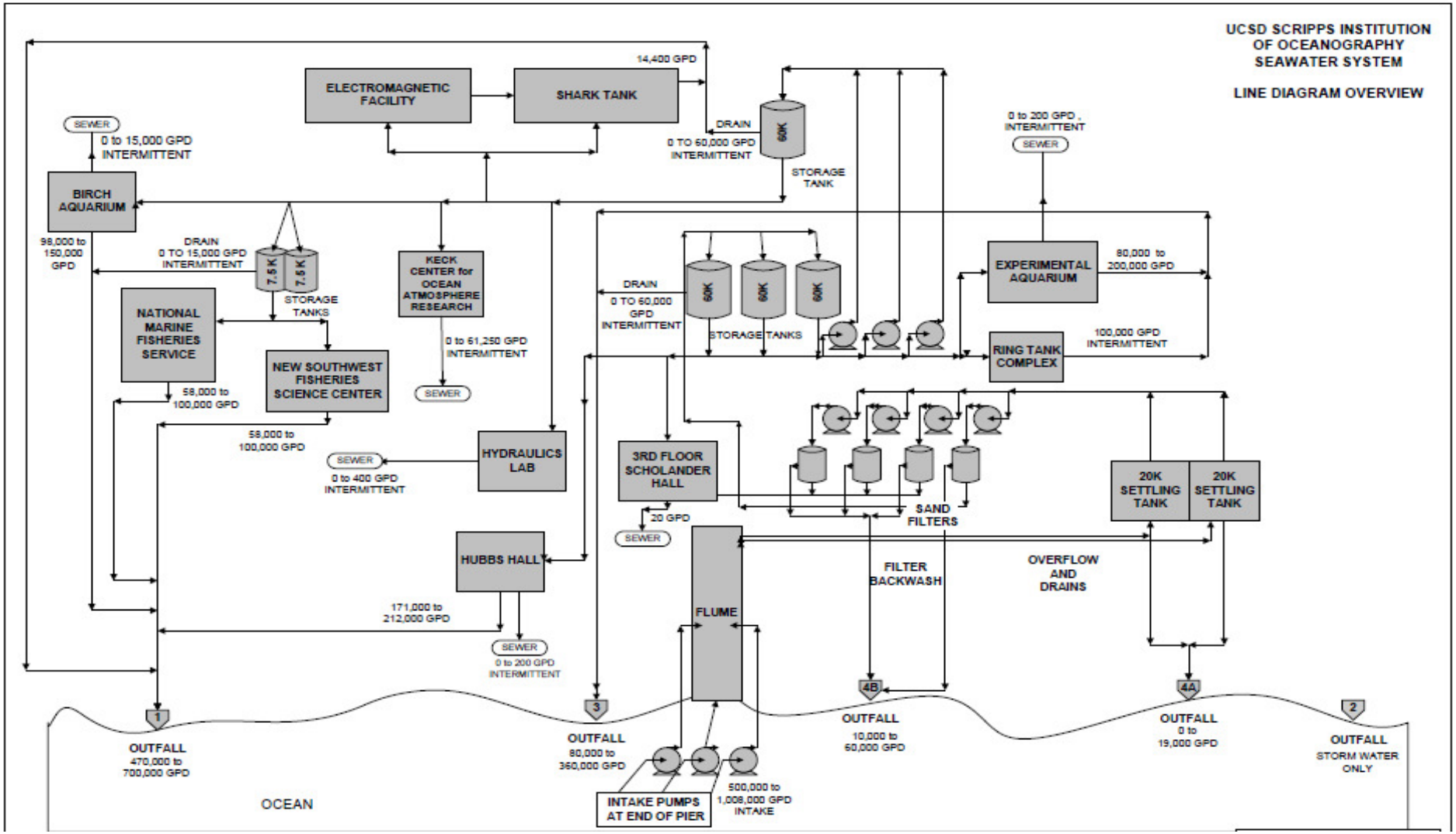

ATTACHMENT D – STANDARD PROVISIONS

I. STANDARD PROVISIONS – PERMIT COMPLIANCE

A. Duty to Comply

1. The Discharger must comply with all of the terms, requirements, and conditions of this Order. Any noncompliance constitutes a violation of the Clean Water Act (CWA) and the California Water Code and is grounds for enforcement action; permit termination, revocation and reissuance, or modification; denial of a permit renewal application; or a combination thereof. (40 CFR section 122.41(a); Water Code, sections 13261, 13263, 13265, 13268, 13000, 13001, 13304, 13350, 13385.)

2. The Discharger shall comply with effluent standards or prohibitions established under section 307(a) of the CWA for toxic pollutants and with standards for sewage sludge use or disposal established under section 405(d) of the CWA within the time provided in the regulations that establish these standards or prohibitions, even if this Order has not yet been modified to incorporate the requirement. (40 CFR section 122.41(a)(1).)

B. Need to Halt or Reduce Activity Not a Defense

It shall not be a defense for a Discharger in an enforcement action that it would have been necessary to halt or reduce the permitted activity in order to maintain compliance with the conditions of this Order. (40 CFR section 122.41(c).)

C. Duty to Mitigate

The Discharger shall take all reasonable steps to minimize or prevent any discharge or sludge use or disposal in violation of this Order that has a reasonable likelihood of adversely affecting human health or the environment. (40 CFR section 122.41(d).)

D. Proper Operation and Maintenance

The Discharger shall at all times properly operate and maintain all facilities and systems of treatment and control (and related appurtenances) which are installed or used by the Discharger to achieve compliance with the conditions of this Order. Proper operation and maintenance also includes adequate laboratory controls and appropriate quality assurance procedures. This provision requires the operation of backup or auxiliary facilities or similar systems that are installed by a Discharger only when necessary to achieve compliance with the conditions of this Order. (40 CFR section 122.41(e).)

E. Property Rights

1. This Order does not convey any property rights of any sort or any exclusive privileges. (40 CFR section 122.41(g).)

2. The issuance of this Order does not authorize any injury to persons or property or invasion of other private rights, or any infringement of state or local law or regulations. (40 CFR section 122.5(c).)

F. Inspection and Entry

The Discharger shall allow the San Diego Water Board, State Water Board, U.S. Environmental Protection Agency (USEPA), and/or their authorized representatives (including an authorized contractor acting as their representative), upon the presentation of credentials and other documents, as may be required by law, to (33 U.S.C. section 1318(a)(4)(b); 40 CFR section 122.41(i); Water Code, sections 13267,13383):

1. Enter upon the Discharger's premises where a regulated facility or activity is located or conducted, or where records are kept under the conditions of this Order (33 U.S.C. section 1318(a)(4)(b)(i); 40 CFR section 122.41(i)(1); Water Code, sections 13267, 13383);

2. Have access to and copy, at reasonable times, any records that must be kept under the conditions of this Order (33 U.S.C. section 1318(a)(4)(b)(ii); 40 CFR section 122.41(i)(2); Water Code, sections 13267, 13383);

3. Inspect and photograph, at reasonable times, any facilities, equipment (including monitoring and control equipment), practices, or operations regulated or required under this Order (33 U.S.C. section 1318(a)(4)(b)(ii); 40 CFR section 122.41(i)(3); Water Code, sections 13267, 13383); and

4. Sample or monitor, at reasonable times, for the purposes of assuring Order compliance or as otherwise authorized by the CWA or the Water Code, any substances or parameters at any location. (33 U.S.C. section 1318(a)(4)(b); 40 CFR section 122.41(i)(4); Water Code, sections 13267, 13383.)

G. Bypass

1. Definitions

a. “Bypass” means the intentional diversion of waste streams from any portion of a treatment facility. (40 CFR section 122.41(m)(1)(i).)

b. “Severe property damage” means substantial physical damage to property, damage to the treatment facilities, which causes them to become inoperable, or substantial and permanent loss of natural resources that can reasonably be expected to occur in the absence of a bypass. Severe property damage does not mean economic loss caused by delays in production. (40 CFR section 122.41(m)(1)(ii).)

2. Bypass not exceeding limitations. The Discharger may allow any bypass to occur which does not cause exceedances of effluent limitations, but only if it is for essential maintenance to assure efficient operation. These bypasses are not subject to the provisions listed in Standard Provisions – Permit Compliance I.G.3, I.G.4, and I.G.5 below. (40 CFR section 122.41(m)(2).)

3. Prohibition of bypass. Bypass is prohibited, and the San Diego Water Board may take enforcement action against a Discharger for bypass, unless (40 CFR section 122.41(m)(4)(i)):

a. Bypass was unavoidable to prevent loss of life, personal injury, or severe property damage (40 CFR section 122.41(m)(4)(i)(A));

b. There were no feasible alternatives to the bypass, such as the use of auxiliary treatment facilities, retention of untreated wastes, or maintenance during normal periods of equipment downtime. This condition is not satisfied if adequate back-up equipment should have been installed in the exercise of reasonable engineering judgment to prevent a bypass that occurred during normal periods of equipment downtime or preventive maintenance (40 CFR section 122.41(m)(4)(i)(B)); and

c. The Discharger submitted notice to the San Diego Water Board as required under Standard Provisions – Permit Compliance I.G.5 below. (40 CFR section 122.41(m)(4)(i)(C).)

4. The San Diego Water Board may approve an anticipated bypass, after considering its adverse effects, if the San Diego Water Board determines that it will meet the three conditions listed in Standard Provisions – Permit Compliance I.G.3 above. (40 CFR section 122.41(m)(4)(ii).)

5. Notice

a. Anticipated bypass. If the Discharger knows in advance of the need for a bypass, it shall submit a notice, if possible at least 10 days before the date of the bypass. (40 CFR section 122.41(m)(3)(i).)

b. Unanticipated bypass. The Discharger shall submit notice of an unanticipated bypass as required in Standard Provisions - Reporting V.E below (24-hour notice). (40 CFR section 122.41(m)(3)(ii).)

H. Upset

Upset means an exceptional incident in which there is unintentional and temporary noncompliance with technology based permit effluent limitations because of factors beyond the reasonable control of the Discharger. An upset does not include noncompliance to the extent caused by operational error, improperly designed treatment facilities, inadequate treatment facilities, lack of preventive maintenance, or careless or improper operation. (40 CFR section 122.41(n)(1).)

1. Effect of an upset. An upset constitutes an affirmative defense to an action brought for noncompliance with such technology based permit effluent limitations if the requirements of Standard Provisions – Permit Compliance I.H.2 below are met. No determination made during administrative review of claims that noncompliance was caused by upset, and before an action for noncompliance, is final administrative action subject to judicial review. (40 CFR section 122.41(n)(2).)

2. Conditions necessary for a demonstration of upset. A Discharger who wishes to establish the affirmative defense of upset shall demonstrate, through properly signed, contemporaneous operating logs or other relevant evidence that (40 CFR section 122.41(n)(3)):

a. An upset occurred and that the Discharger can identify the cause(s) of the upset (40 CFR section 122.41(n)(3)(i));

b. The permitted facility was, at the time, being properly operated (40 CFR section 122.41(n)(3)(ii));

c. The Discharger submitted notice of the upset as required in Standard Provisions – Reporting V.E.2.b below (24-hour notice) (40 CFR section 122.41(n)(3)(iii)); and

d. The Discharger complied with any remedial measures required under Standard Provisions – Permit Compliance I.C above. (40 CFR section 122.41(n)(3)(iv).)

3. Burden of proof. In any enforcement proceeding, the Discharger seeking to establish the occurrence of an upset has the burden of proof. (40 CFR section 122.41(n)(4).)

II. STANDARD PROVISIONS – PERMIT ACTION

A. General

This Order may be modified, revoked and reissued, or terminated for cause. The filing of a request by the Discharger for modification, revocation and reissuance, or termination, or a notification of planned changes or anticipated noncompliance does not stay any Order condition. (40 CFR section 122.41(f).)

B. Duty to Reapply

If the Discharger wishes to continue an activity regulated by this Order after the expiration date of this Order, the Discharger must apply for and obtain a new permit. (40 CFR section 122.41(b).)

C. Transfers

This Order is not transferable to any person except after notice to the San Diego Water Board. The San Diego Water Board may require modification or revocation and reissuance of the Order to change the name of the Discharger and incorporate such other requirements as may be necessary under the CWA and the Water Code. (40 CFR section 122.41(l)(3); section 122.61.)

III. STANDARD PROVISIONS – MONITORING

A. Samples and measurements taken for the purpose of monitoring shall be representative of the monitored activity. (40 CFR section 122.41(j)(1).)

B. Monitoring results must be conducted according to test procedures approved under 40 CFR part 136 for the analyses of pollutants unless another method is required under 40 CFR subchapters N or O. In the case of pollutants for which there are no approved methods under 40 CFR part 136 or otherwise required under 40 CFR subchapters N or O, monitoring must be conducted according to a test procedure specified in this Order for such pollutants.. (40 CFR sections 122.41(j)(4),122.44(i)(1)(iv).)

IV. STANDARD PROVISIONS – RECORDS

A. Except for records of monitoring information required by this Order related to the Discharger's sewage sludge use and disposal activities, which shall be retained for a period of at least five years (or longer as required by part 503), the Discharger shall retain records of all monitoring information, including all calibration and maintenance records and all original strip chart recordings for continuous monitoring instrumentation, copies of all reports required by this Order, and records of all data used to complete the application for this Order, for a period of at least three (3) years from the date of the sample, measurement, report or application. This period may be extended by request of the San Diego Water Board Executive Officer at any time. (40 CFR section 122.41(j)(2).)

B. Records of monitoring information shall include:

1. The date, exact place, and time of sampling or measurements (40 CFR section 122.41(j)(3)(i));

2. The individual(s) who performed the sampling or measurements (40 CFR section 122.41(j)(3)(ii));

3. The date(s) analyses were performed (40 CFR section 122.41(j)(3)(iii));

4. The individual(s) who performed the analyses (40 CFR section 122.41(j)(3)(iv));

5. The analytical techniques or methods used (40 CFR section 122.41(j)(3)(v)); and

6. The results of such analyses. (40 CFR section 122.41(j)(3)(vi).)

C. Claims of confidentiality for the following information will be denied (40 CFR section 122.7(b)):

1. The name and address of any permit applicant or Discharger (40 CFR section 122.7(b)(1)); and

2. Permit applications and attachments, permits and effluent data. (40 CFR section 122.7(b)(2).)

V. STANDARD PROVISIONS – REPORTING

A. Duty to Provide Information

The Discharger shall furnish to the San Diego Water Board, State Water Board, or USEPA within a reasonable time, any information which the San Diego Water Board, State Water Board, or USEPA may request to determine whether cause exists for modifying, revoking and reissuing, or terminating this Order or to determine compliance with this Order. Upon request, the Discharger shall also furnish to the San Diego Water Board, State Water Board, or USEPA copies of records required to be kept by this Order. (40 CFR section 122.41(h); Water Code sections 13267 & 13383.)

B. Signatory and Certification Requirements

1. All applications, reports, or information submitted to the San Diego Water Board, State Water Board, and/or USEPA shall be signed and certified in accordance with Standard Provisions – Reporting V.B.2, V.B.3, V.B.4, and V.B.5 below. (40 CFR section 122.41(k).

2. All permit applications shall be signed by either a principal executive officer or ranking elected official. For purposes of this provision, a principal executive officer of a federal agency includes: (i) the chief executive officer of the agency, or (ii) a senior executive officer having responsibility for the overall operations of a principal geographic unit of the agency (e.g., Regional Administrators of USEPA). (40 CFR section 122.22(a)(3).).

3. All reports required by this Order and other information requested by the San Diego Water Board, State Water Board, or USEPA shall be signed by a person described in Standard Provisions – Reporting V.B.2 above, or by a duly authorized representative of that person. A person is a duly authorized representative only if:

a. The authorization is made in writing by a person described in Standard Provisions – Reporting V.B.2 above (40 CFR section 122.22(b)(1));

b. The authorization specifies either an individual or a position having responsibility for the overall operation of the regulated facility or activity such as the position of plant manager, operator of a well or a well field, superintendent, position of equivalent responsibility, or an individual or position having overall responsibility for environmental matters for the company. (A duly authorized representative may thus be either a named individual or any individual occupying a named position.) (40 CFR section 122.22(b)(2)); and

c. The written authorization is submitted to the San Diego Water Board and State Water Board. (40 CFR section 122.22(b)(3).)

4. If an authorization under Standard Provisions – Reporting V.B.3 above is no longer accurate because a different individual or position has responsibility for the overall operation of the facility, a new authorization satisfying the requirements of Standard Provisions – Reporting V.B.3 above must be submitted to the San Diego Water Board and State Water Board prior to or together with any reports, information, or applications, to be signed by an authorized representative. (40 CFR section 122.22(c).)

5. Any person signing a document under Standard Provisions – Reporting V.B.2 or V.B.3 above shall make the following certification:

"I certify under penalty of law that this document and all attachments were prepared under my direction or supervision in accordance with a system designed to assure that qualified personnel properly gather and evaluate the information submitted. Based on my inquiry of the person or persons who manage the system or those persons directly responsible for gathering the information, the information submitted is, to the best of my knowledge and belief, true, accurate, and complete. I am aware that there are significant penalties for submitting false information, including the possibility of fine and imprisonment for knowing violations." (40 CFR section 122.22(d).)

C. Monitoring Reports

1. Monitoring results shall be reported at the intervals specified in the Monitoring and Reporting Program (Attachment E) in this Order. (40 CFR section 122.22(l)(4).)

2. Monitoring results must be reported on a Discharge Monitoring Report (DMR) form or forms provided or specified by the San Diego Water Board or State Water Board for reporting results of monitoring of sludge use or disposal practices. (40 CFR section 122.41(l)(4)(i).)

3. If the Discharger monitors any pollutant more frequently than required by this Order using test procedures approved under part 136 or, in the case of sludge use or disposal, approved under part 136 unless otherwise specified in part 503, or as specified in this Order, the results of this monitoring shall be included in the calculation and reporting of the data submitted in the DMR or sludge reporting form specified by the San Diego Water Board. (40 CFR section 122.41(l)(4)(ii).)

4. Calculations for all limitations, which require averaging of measurements, shall utilize an arithmetic mean unless otherwise specified in this Order. (40 CFR section 122.41(l)(4)(iii).)

D. Compliance Schedules

Reports of compliance or noncompliance with, or any progress reports on, interim and final requirements contained in any compliance schedule of this Order, shall be submitted no later than 14 days following each schedule date. (40 CFR section 122.41(l)(5).)

E. Twenty-Four Hour Reporting

1. The Discharger shall report any noncompliance that may endanger health or the environment. Any information shall be provided orally within 24 hours from the time the Discharger becomes aware of the circumstances. A written submission shall also be provided within five (5) days of the time the Discharger becomes aware of the circumstances. The written submission shall contain a description of the noncompliance and its cause; the period of noncompliance, including exact dates and times, and if the noncompliance has not been corrected, the anticipated time it is expected to continue; and steps taken or planned to reduce, eliminate, and prevent reoccurrence of the noncompliance. (40 CFR section 122.41(l)(6)(i).)

2. The following shall be included as information that must be reported within 24 hours under this paragraph (40 CFR section 122.41(l)(6)(ii)):

   a. Any unanticipated bypass that exceeds any effluent limitation in this Order. (40 CFR section 122.41(l)(6)(ii)(A).)

   b. Any upset that exceeds any effluent limitation in this Order. (40 CFR section 122.41(l)(6)(ii)(B).)

3. The San Diego Water Board may waive the above-required written report under this provision on a case-by-case basis if an oral report has been received within 24 hours. (40 CFR section 122.41(l)(6)(iii).)

F. Planned Changes

The Discharger shall give notice to the San Diego Water Board as soon as possible of any planned physical alterations or additions to the permitted facility. Notice is required under this provision only when (40 CFR section 122.41(l)(1)):

1. The alteration or addition to a permitted facility may meet one of the criteria for determining whether a facility is a new source in section 122.29(b) (40 CFR section 122.41(l)(1)(i)); or

2. The alteration or addition could significantly change the nature or increase the quantity of pollutants discharged. This notification applies to pollutants that are not subject to effluent limitations in this Order. (40 CFR section 122.41(l)(1)(ii).)

The alteration or addition could significantly change the nature or increase the quantity of pollutants discharged. This notification applies to pollutants that are subject neither to effluent limitations in this Order nor to notification requirements under section 122.42(a)(1) (see Additional Provisions—Notification Levels VII.A.1). (40 CFR section 122.41(l)(1)(ii).)

G. Anticipated Noncompliance

The Discharger shall give advance notice to the San Diego Water Board or State Water Board of any planned changes in the permitted facility or activity that may result in noncompliance with General Order requirements. (40 CFR section 122.41(l)(2).)

H. Other Noncompliance

The Discharger shall report all instances of noncompliance not reported under Standard Provisions – Reporting V.C, V.D, and V.E above at the time monitoring reports are submitted. The reports shall contain the information listed in Standard Provision – Reporting V.E above. (40 CFR section 122.41(l)(7).)

I. Other Information

When the Discharger becomes aware that it failed to submit any relevant facts in a permit application, or submitted incorrect information in a permit application or in any report to the San Diego Water Board, State Water Board, or USEPA, the Discharger shall promptly submit such facts or information. (40 CFR section 122.41(l)(8).)

VI. STANDARD PROVISIONS – ENFORCEMENT

A. The San Diego Water Board is authorized to enforce the terms of this permit under several provisions of the Water Code, including, but not limited to, sections 13268, 13385, 13386, and 13387

VII. ADDITIONAL PROVISIONS – NOTIFICATION LEVELS

A. Non-Municipal Facilities

Existing manufacturing, commercial, mining, and silvicultural Dischargers shall notify the San Diego Water Board as soon as they know or have reason to believe (40 CFR section 122.42(a)):

1. That any activity has occurred or will occur that would result in the discharge, on a routine or frequent basis, of any toxic pollutant that is not limited in this Order, if that discharge will exceed the highest of the following "notification levels" (40 CFR section 122.42(a)(1)):

a. 100 micrograms per liter (µg/L) (40 CFR section 122.42(a)(1)(i));

b. 200 µg/L for acrolein and acrylonitrile; 500 µg/L for 2,4-dinitrophenol and 2-methyl-4,6-dinitrophenol; and one milligram per liter (mg/L) for antimony (40 CFR section 122.42(a)(1)(ii));

c. Five (5) times the maximum concentration value reported for that pollutant in the Report of Waste Discharge (40 CFR section 122.42(a)(1)(iii)); or

d. The level established by the San Diego Water Board in accordance with section 122.44(f). (40 CFR section 122.42(a)(1)(iv).)

2. That any activity has occurred or will occur that would result in the discharge, on a non-routine or infrequent basis, of any toxic pollutant that is not limited in this Order, if that discharge will exceed the highest of the following “notification levels" (40 CFR section 122.42(a)(2)):

a. 500 micrograms per liter (µg/L) (40 CFR section 122.42(a)(2)(i));

b. 1 milligram per liter (mg/L) for antimony (40 CFR section 122.42(a)(2)(ii));

c. Ten (10) times the maximum concentration value reported for that pollutant in the Report of Waste Discharge (40 CFR section 122.42(a)(2)(iii)); or

d. The level established by the San Diego Water Board in accordance with section 122.44(f). (40 CFR section 122.42(a)(2)(iv).)

ATTACHMENT E – MONITORING AND REPORTING PROGRAM

Table of Contents

I. General Monitoring Provisions E-3
II. Monitoring Locations E-4
III. Core Monitoring Requirements E-4
  A. Influent Monitoring Requirements – Not applicable E-4
  B. Effluent Monitoring Requirements E-4
  C. Whole Effluent Toxicity Testing Requirements E-10
  D. Reclamation Monitoring Requirements – Not Applicable E-15
IV. Receiving Water Monitoring Requirements – Surface Water and Groundwater E-16
V. Regional Monitoring Requirements E-18
VI. Special Studies and Other Monitoring Requirements E-19
VII. Reporting Requirements E-19

List of Tables

Table E-1. Monitoring Station Locations E-4
Table E-2. Effluent Monitoring at Outfall 001, Monitoring Location EFF-001 ..... E-5
Table E-3. Effluent Monitoring at Outfall 002, Monitoring Location EFF-002 ..... E-6
Table E-4. Effluent Monitoring at Outfall 003, Monitoring Location EFF-003 ..... E-7
Table E-5. Effluent Monitoring at Outfall 004a, Monitoring Location EFF-004a E-8
Table E-6. Effluent Monitoring at Outfall 004b, Monitoring Location EFF-004b E-9
Table E-7. USEPA Test Methods and Test Acceptability Criteria E-13
Table E-8. Receiving Water Monitoring Requirements E-17
Table E-9. Monitoring Periods and Reporting Schedule E-20
Table E-10. Reporting Requirements for Special Provisions Progress Reports E-22

ATTACHMENT E – MONITORING AND REPORTING PROGRAM (MRP)

Section 308 of the federal Clean Water Act (CWA) and sections 122.41(h), (j)-(l), 122.44(i), and 122.48 of the Code of Federal Regulations, title 40 (40 CFR) require that all National Pollutant Discharge Elimination System (NPDES) permits specify monitoring and reporting requirements. California Water Code (Water Code) sections 13267 and 13383 also authorize the California Regional Water Quality Control Board, San Diego Region (San Diego Water Board) to establish monitoring, inspection, entry, reporting, and recordkeeping requirements. Pursuant to this authority this MRP establishes conditions for the Discharger to conduct routine or episodic self-monitoring of the discharges regulated under this Order at specified effluent and receiving water monitoring locations. The MRP requires the Discharger to report the results to the San Diego Water Board with information necessary to evaluate discharge characteristics and compliance status.

The purpose of the MRP is to determine and ensure compliance with effluent limitations and other requirements established in this Order, assess treatment efficiency, characterize effluents, and characterize the receiving water along with the effects of the discharge on the receiving water. The MRP also specifies requirements concerning the proper use, maintenance, and installation of monitoring equipment and methods, and the monitoring type intervals and frequency necessary to yield data that are representative of the activities and discharges regulated under this Order.

Each monitoring section contains an introductory paragraph summarizing why the monitoring is needed and the key management questions the monitoring is designed to answer. In developing the list of key management questions the San Diego Water Board considered four basic types of information for each question:

(1) Management Information Need – Why does the San Diego Water Board need to know the answer?

(2) Monitoring Criteria – What monitoring will be conducted for deriving an answer to the question?

(3) Expected Product – How should the answer be expressed and reported?

(4) Possible Management Actions – What actions will be potentially influenced by the answer?

The framework for this monitoring program has three components that comprise a range of spatial and temporal scales: 1. core monitoring, 2. regional monitoring, and 3. special studies.

1. Core monitoring consists of the basic site-specific monitoring necessary to measure compliance with individual effluent limits and/or impacts to receiving water quality. Core monitoring is typically conducted in the immediate vicinity of the discharge by examining local scale spatial effects.

2. Regional monitoring provides information necessary to make assessments over large areas and serves to evaluate cumulative effects of all anthropogenic inputs. Regional monitoring data also assists in the interpretation of core monitoring studies. In the event that a regional monitoring effort takes place during the permit cycle in which the MRP does not specifically address regional monitoring, the San Diego Water Board may allow relief from aspects of core monitoring components in order to encourage participation pursuant to section V of this MRP.

3. Special studies are directed monitoring efforts designed in response to specific management or research questions identified through either core or regional monitoring programs. Often they are used to help understand core or regional monitoring results, where a specific environmental process is not well understood, or to address unique issues of local importance.

I. GENERAL MONITORING PROVISIONS

A. Samples and measurements taken as required herein shall be representative of the volume and nature of the monitoring discharge. All samples shall be taken at the monitoring points specified below and, unless otherwise specified, before the monitored flow joins or is diluted by any other waste stream, body of water, or substance. Monitoring points shall not be changed without notification to and the approval of the San Diego Water Board. Samples shall be collected at times representative of "worst case" conditions with respect to compliance with the requirement of this Order.

B. Appropriate flow measurement devices and methods consistent with accepted scientific practices shall be selected and used to ensure the accuracy and reliability of measurements of the volume of monitored discharges. The devices shall be installed, calibrated and maintained to ensure that the accuracy of the measurement is consistent with the accepted capability of that type of device. Devices selected shall be capable of measuring flows with a maximum deviation of less than ±5 percent from true discharge rates throughout the range of expected discharge volumes.

C. Monitoring must be conducted according to U.S. Environmental Protection Agency (USEPA) test procedures approved at 40 CFR part 136, *Guidelines Establishing Test Procedures for the Analysis of Pollutants Under the Clean Water Act* as amended, or unless other test procedures are specified in this Order and/or in this MRP and/or by the San Diego Water Board.

D. All analyses shall be performed in a laboratory certified to perform such analyses by the State Water Board's Division of Drinking Water (DDW) or a laboratory approved by the San Diego Water Board. The laboratory must be accredited under the Environmental Laboratory Accreditation Program (ELAP) to ensure the quality of analytical data used for regulatory purposes to meet the requirements of this Order. Additional information on ELAP can be accessed at http://www.waterboards.ca.gov/drinking_water/certlic/labs/index.shtml.

E. The Discharger shall retain records of all monitoring information, including all calibration and maintenance records and all original strip chart recordings for continuous monitoring, instrumentation, copies of all reports required by this Order and this MRP, and records of all data used to complete the application for this Order. Records of monitoring information shall include information required under Standard Provision, Attachment D, section IV. Records shall be maintained for a minimum of five years from the date of sample, measurement, report, or application. This period may be extended by request of this San Diego Water Board or by the U.S. EPA at any time.

F. All monitoring instruments and devices used by the University of California, San Diego (Discharger) to fulfill the prescribed monitoring program shall be properly maintained and calibrated as necessary to ensure their continued accuracy. All flow measurement devices shall be calibrated at least once per year, or more frequently, to ensure continued accuracy of the devices.

G. The Discharger shall have, and implement, an acceptable written quality assurance (QA) plan for laboratory analyses. Duplicate chemical analyses must be conducted on a minimum of 10 percent of the samples. A similar frequency shall be maintained for analyzing spiked samples. When requested by USEPA or the San Diego Water Board, the Discharger will participate in the NPDES discharge monitoring report QA performance study. The Discharger should have a success rate equal or greater than 80 percent.

H. Analysis for toxic pollutants, including chronic toxicity, with effluent limitations based on water quality objectives of the Water Quality Control Plan for Ocean Waters of California, California Ocean Plan (Ocean Plan) shall be conducted in accordance with procedures described in the Ocean Plan and restated in this MRP.

I. The Discharger shall ensure that analytical procedures used to evaluate compliance with effluent limitations established in this Order use minimum levels (ML) no greater than the applicable effluent limitation or performance objective. The minimum levels must be consistent with the requirements of 40 CFR part 136 and consistent with the Ocean Plan Appendix II, or otherwise approved by USEPA and authorized by the San Diego Water Board. If no authorized ML value is below the effluent limitation or performance objective, then the method must achieve an ML no greater than the lowest ML value indicated in Ocean Plan (or if not listed in the Ocean Plan, be the lowest ML provided for in 40 CFR part 136).

II. MONITORING LOCATIONS

The Discharger shall establish the following monitoring locations to demonstrate compliance with the effluent limitations, discharge specifications, and other requirements in this Order:

Table E-1. Monitoring Station Locations

Discharge Point / Outfall Number	Monitoring Location Name	Monitoring Location Description (include Latitude and Longitude when available)
001	EFF-001	Aquaria Wastewater; 32 º, 52', 2" N, 117 º, 15', 13" W, at a location where aquaria wastewater can be collected, prior to mixing with storm water
002	EFF-002	Storm Water; 32 º, 51', 58" N, 117 º, 15', 14" W
003	EFF-003	Aquaria wastewater and seawater 32 º, 51', 56" N, 117 º, 15', 15" W
004a	EFF-004a	Unfiltered raw seawater; 32 º, 51', 57" N, 117 º, 15', 15" W
004b	EFF-004b	Filter Backwash water; 32 º, 51', 57" N, 117 º, 15', 15" W
	RSW-01	Just outside the surf zone or at a location that is identified in the benthic marine survey
	S1	Surf Zone, 1,000 feet south of the Scripps Institution of Oceanography (SIO) Pier
	S2	Surf Zone, 250 feet south of the SIO Pier
	S3	Surf Zone, 500 feet north of the SIO Pier

III. CORE MONITORING REQUIREMENTS

A. Influent Monitoring Requirements – Not applicable

B. Effluent Monitoring Requirements

Effluent monitoring is the collection and analysis of samples or measurements of effluents, after all treatment processes, to determine and quantify contaminants and to demonstrate compliance with applicable effluent limitations, standards, and other requirements of this Order.

Effluent monitoring is necessary to address the following questions:

(1) Does the effluent comply with permit effluent limitations, performance goals, and other requirements of this Order, thereby ensuring that water quality standards are achieved in the receiving water?

(2) What is the mass of constituents that are discharged daily, monthly, or annually?

(3) Is the effluent concentration or mass changing over time?

(4) Is the University of California, San Diego – Scripps Institution of Oceanography (Facility) being properly operated and maintained to ensure compliance with the conditions of the Order?

1. Discharge Point 001 (Outfall 001) at Monitoring Location EFF-001

The Discharger shall monitor aquaria wastewater/filtered seawater at Monitoring Location EFF-001 as follows. If more than one analytical test method is listed for a given parameter, the Discharger must select from the listed methods and corresponding minimum level:

Table E-2. Effluent Monitoring at Outfall 001, Monitoring Location EFF-001

Parameter	Units	Sample Type	Minimum Sampling Frequency	Required Analytical Test Method
Flow	MDG	recorder / totalizer	continuous[1]	[2]
Oil and Grease	mg/l	grab	2/year	[2]
Total Suspended Solids	mg/l	24-hour composite	2/year	[2]
Settleable Solids	ml/l	grab	2/year	[2]
Turbidity	NTU	grab	2/year	[2]
pH	pH Units	grab	2/year	[2]
Copper, Total Recoverable	µg/l	24-hour composite	2/year	[2]
Chronic Toxicity	Pass/Fail, % effect (Test of Significant Toxicity)	24-hour composite	2/year	[3]
Bis (2-ethylhexyl) phthalate	µg/l	24-hour composite	2/year	[2]
DDT	µg/l	24-hour composite	2/year	[2]
TCDD Equivalents	µg/l	24-hour composite	2/year	[2]
Other Ocean Plan Table 1 Parameters, except Acute Toxicity	µg/l	grab/24-hour composite[4]	[5]	[2]

1. Report the average daily flow and monthly average flow.
2. Analytical methods as required under 40 CFR part 136.
3. Monitoring for whole effluent toxicity (WET) shall be conducted as specified in section III.C of this MRP.

4. Total phenols and volatile organics shall be grab samples.
5. During the first year of the permit cycle, two samples must be collected from Outfall 001 (once during dry weather and once during wet weather). For wet weather samples, the effluent samples must also be analyzed for Ocean Plan indicator bacteria (total coliform, fecal coliform, and enterococcus). After the first year of the permit cycle, the monitoring frequency may be reduced to once per year, unless notified otherwise by the San Diego Water Board.

2. Discharge Point 002 (Outfall 002) at Monitoring Location EFF-002

The Discharger shall monitor storm water at Monitoring Location EFF-002 as follows. If more than one analytical test method is listed for a given parameter, the Discharger must select from the listed methods and corresponding minimum level:

Table E-3. Effluent Monitoring at Outfall 002, Monitoring Location EFF-002

Parameter	Units	Sample Type	Minimum Sampling Frequency	Required Analytical Test Method and (Minimum Level, units), respectively
Flow	MDG	estimate or recorder/totalizer	continuous[1]	[2]
Oil and Grease	mg/l	grab	1/year	[2]
Total Suspended Solids	mg/l	24-hour composite	1/year	[2]
Settleable Solids	ml/l	grab	1/year	[2]
Turbidity	NTU	grab	1/year	[2]
pH	pH Units	grab	1/year	[2]
Chronic Toxicity	Pass/Fail, % effect (Test of Significant Toxicity)	24-hour composite	[5]	[3]
Other Ocean Plan Table 1 Parameters, except Acute Toxicity	µg/l	grab/24-hour composite[4]	[6]	[2]

1. The Discharger shall estimate the flow rates. If a flow meter is installed at Monitoring Location EFF-002, then the recorded daily flow rate shall be reported.
2. Analytical methods as required under 40 CFR part 136.
3. Monitoring for whole effluent toxicity (WET) shall be conducted as specified in section III.C of this MRP.
4. Total phenols and volatile organics shall be grab samples.
5. Two samples must be collected from Outfall 002 (once during dry weather and once during wet weather). If there is no flow during the dry weather from Outfall 002, only one sample must be collected from Outfall 002 during the wet weather.
6. During the first year of the permit cycle, two samples must be collected from Outfall 002 (once during dry weather and once during wet weather). For wet weather samples, the effluent samples must also be analyzed for Ocean Plan indicator bacteria (total coliform, fecal coliform, and enterococcus). If there is no flow during the dry weather from Outfall 002 during the first year of the permit cycle, only one sample must be collected from Outfall 002 during the wet weather. After the first year of the permit cycle, the monitoring frequency may be reduced to once per year, unless notified otherwise by the San Diego Water Board.

3. Discharge Point 003 (Outfall 003) at Monitoring Location EFF-003

The Discharger shall monitor aquaria wastewater/filtered seawater at Monitoring Location EFF-003 as follows. If more than one analytical test method is listed for a given parameter, the Discharger must select from the listed methods and corresponding Minimum Level:

Table E-4. Effluent Monitoring at Outfall 003, Monitoring Location EFF-003

Parameter	Units	Sample Type	Minimum Sampling Frequency	Required Analytical Test Method
Flow	MDG	estimate or recorder/totalizer	continuous[1]	[2]
Oil and Grease	mg/l	grab	2/year	[2]
Total Suspended Solids	mg/l	24-hour composite	2/year	[2]
Settleable Solids	ml/l	grab	2/year	[2]
Turbidity	NTU	grab	2/year	[2]
pH	pH Units	grab	2/year	[2]
Copper, Total Recoverable	µg/l	24-hour composite	2/year	[2]
Lead, Total Recoverable	µg/l	24-hour composite	2/year	[2]
Chronic Toxicity	Pass/Fail, % effect (Test of Significant Toxicity)	24-hour composite	2/year	[3]
DDT	µg/l	24-hour composite	2/year	[2]
PAHs	µg/l	24-hour composite	2/year	[2]
TCDD Equivalents	µg/l	24-hour composite	2/year	[2]
Other Ocean Plan Table 1 Parameters, except Acute Toxicity	µg/l	grab/24-hour composite[4]	[5]	[2]

1. The Discharger shall estimate the flow rates. If a flow meter is installed at Monitoring Location EFF-003, then the recorded daily flow rate shall be reported.
2. Analytical methods as required under 40 CFR part 136.
3. Monitoring for whole effluent toxicity (WET) shall be conducted as specified in section III.C of this MRP.
4. Total phenols and volatile organics shall be grab samples.
5. During the first year of the permit cycle, two samples must be collected from Outfall 003 (once during dry weather and once during wet weather). For wet weather samples, the effluent samples must also be analyzed for Ocean Plan indicator bacteria (total coliform, fecal coliform, and enterococcus). After the first year of the permit cycle, the monitoring frequency may be reduced to once per year, unless notified otherwise by the San Diego Water Board.

4. Discharge Point 004a (Outfall 004a) at Monitoring Location EFF-004a

The Discharger shall monitor unfiltered raw seawater at Monitoring Location EFF-004a as follows. The Discharger shall coordinate sampling date/time at Monitoring Location EFF-004a to correspond to the date/time when the settling tanks are switched or a settling tank is drained for maintenance. If more than one analytical test method is listed for a given parameter, the Discharger must select from the listed methods and corresponding Minimum Level:

Table E-5. Effluent Monitoring at Outfall 004a, Monitoring Location EFF-004a

Parameter	Units	Sample Type	Minimum Sampling Frequency	Required Analytical Test Method
Flow	MDG	estimate	each batch discharge[1]	2
Oil and Grease	mg/l	grab from the batch discharge	2/year	2
Total Suspended Solids	mg/l	grab from the batch discharge	2/year	2
Settleable Solids	ml/l	grab from the batch discharge	2/year	2
Turbidity	NTU	grab from the batch discharge	2/year	2
pH	pH Units	grab from the batch discharge	2/year	2
Chronic Toxicity	Pass/Fail, % effect (Test of Significant Toxicity)	grab from the batch discharge	2/year	3
DDT	µg/l	grab from the batch discharge	2/year	2
PAHs	µg/l	grab from the batch discharge	2/year	2
TCDD Equivalents	µg/l	grab from the batch discharge	2/year	2
Other Ocean Plan Table 1 Parameters, except Acute Toxicity	µg/l	grab from the batch discharge	4	2

1. The Discharger shall estimate the flow rates.
2. Analytical methods as required by 40 CFR part 136.
3. Monitoring for whole effluent toxicity (WET) shall be conducted as specified in section III.C of this MRP.
4. During the first year of the permit cycle, two samples must be collected from Outfall 004a (once during dry weather and once during wet weather). For wet weather samples, the effluent samples must also be analyzed for Ocean Plan indicator bacteria (total coliform, fecal coliform, and enterococcus). After the first year of the permit cycle, the monitoring frequency may be reduced to once per year, unless notified otherwise by the San Diego Water Board.

5. Discharge Point 004b (Outfall 004b) at Monitoring Location EFF-004b

The Discharger shall monitor filter backwash water at Monitoring Locations EFF-004b as follows. If more than one analytical test method is listed for a given parameter, the Discharger must select from the listed methods and corresponding Minimum Level:

Table E-6. Effluent Monitoring at Outfall 004b, Monitoring Location EFF-004b

Parameter	Units	Sample Type	Minimum Sampling Frequency	Required Analytical Test Method
Flow	MDG	estimate or recorder/totalizer	continuous[1]	[2]
Oil and Grease	mg/l	grab	2/year	[2]
Total Suspended Solids	mg/l	24-hour composite	2/year	[2]
Settleable Solids	ml/l	grab	2/year	[2]
Turbidity	NTU	grab	2/year	[2]
pH	pH Units	grab	2/year	[2]
Chromium (Hexavalent), Total Recoverable	µg/l	24-hour composite	2/year	[2]
Chronic Toxicity	Pass/Fail, % effect (Test of Significant Toxicity)	24-hour composite	2/year	[3]
DDT	µg/l	24-hour composite	2/year	[2]
PAHs	µg/l	24-hour composite	2/year	[2]
TCDD Equivalents	µg/l	24-hour composite	2/year	[2]
Other Ocean Plan Table 1 Parameters, except Acute Toxicity	µg/l	grab/24-hour composite[4]	[5]	[2]

1. The Discharger shall estimate the flow rates. If a flow meter is installed at Monitoring Location EFF-004b, then the recorded daily flow rate shall be reported.
2. Analytical methods as required under 40 CFR part 136.
3. Monitoring for whole effluent toxicity (WET) shall be conducted as specified in section III.C of this MRP.
4. Total phenols and volatile organics shall be grab samples.
5. During the first year of the permit cycle, two samples must be collected from Outfall 004b (once during dry weather and once during wet weather). For wet weather samples, the effluent samples must also be analyzed for Ocean Plan indicator bacteria (total coliform, fecal coliform, and enterococcus). After the first year of the permit cycle, the monitoring frequency may be reduced to once per year, unless notified otherwise by the San Diego Water Board.

C. Whole Effluent Toxicity Testing Requirements

Whole effluent toxicity (WET) refers to the overall aggregate toxic effect of an effluent measured directly by an aquatic toxicity test(s). WET tests evaluate the 1) aggregate toxic effects of all chemicals in the effluent including additive, synergistic, or antagonistic toxicity effects; 2) the toxicity effects of unmeasured chemicals in the effluent; and 3) variability in bioavailability of the chemicals in the effluent.

Monitoring to assess the overall toxicity of the effluent is required to answer the following questions:

(1) Does the effluent comply with permit effluent limitations for chronic toxicity thereby ensuring that water quality standards are achieved in the receiving water?

(2) If the effluent does not comply with permit effluent limitations for chronic toxicity, are unmeasured pollutants causing risk to aquatic life?

(3) If the effluent does not comply with permit effluent limitations for chronic toxicity, are pollutants in combinations causing risk to aquatic life?

1. Monitoring Frequency for Chronic Toxicity

The Discharger shall conduct chronic toxicity monitoring twice per year for Monitoring Locations EFF-001, EFF-002, EFF-003, EFF-004a, and EFF-004b. The In-stream Waste Concentration (IWC) for this discharge is 14 percent effluent.

2. Sample Volume and Holding Time

The total sample volume shall be determined by the specific toxicity test method that is used. Sufficient sample volume shall be collected to perform the required toxicity test. For the receiving water, sufficient sample volume shall also be collected during accelerated monitoring for subsequent Toxicity Identification Evaluation (TIE) studies, if necessary, at each sampling event. All toxicity tests shall be conducted as soon as possible following sample collection. No more than 36 hours shall elapse before the conclusion of sample collection and test initiation.

3. Marine and Estuarine Species and Test Methods

The Discharger shall conduct a species sensitivity screening for chronic toxicity on a representative sample which shall include one vertebrate, one invertebrate, and one aquatic plant during the first required monitoring period. The species sensitivity screening samples shall also be analyzed for the parameters required for the discharge. The test species that exhibits the highest percent effect at the Instream Waste Concentration (IWC) during a species sensitivity screening (i.e. the most sensitive species) shall be utilized for routine monitoring during the permit cycle. Routine toxicity test design shall, at a minimum, include analysis of the IWC compared to a control.

The Discharger shall follow the methods for chronic toxicity tests as established in 40 CFR section 136.3. The USEPA method manuals referenced therein include *Short-term Methods for Estimating the Chronic Toxicity of Effluents and Receiving Waters to Freshwater Organisms, Fourth Edition* (EPA-821-R-02-013), and *Short-term Methods for Estimating the Chronic Toxicity of Effluents and Receiving Waters to Marine and Estuarine Organisms, Third Edition* (EPA-821-R-02-014). Additional methods for chronic toxicity monitoring are outlined in *Short-term Methods for Estimating the Chronic Toxicity of Effluents and Receiving Waters to West Coast Marine and Estuarine Organisms, First Edition* (EPA-600-R-95-136).

For discharges to marine and estuarine waters, the Discharger shall conduct a static renewal toxicity test with the topsmelt, *Atherinops affinis* (Larval Survival and Growth Test Method 1006.01); a static non-renewal toxicity test with the giant kelp, *Macrocystis pyrifera* (Germination and Growth Test Method 1009.0); and a static non-renewal toxicity test with the purple sea urchin, *Strongylocentrotus purpuratus*, or the sand dollar, *Dendraster excentricus* (Fertilization Test Method 1008.0).

If laboratory-held cultures of the topsmelt, *Atherinops affinis*, are not available for testing, then the Discharger shall conduct a static renewal toxicity test with the inland silverside, *Menidia beryllina* (Larval Survival and Growth Test Method 1006.01), found in the third edition of *Short-term Methods for Estimating the Chronic Toxicity of Effluents and Receiving Waters to Marine and Estuarine Organisms* (EPA/821/R-02/014, 2002; Table IA, 40 CFR part 136). Additional species may be used by the Discharger if approved by the San Diego Water Board.

All toxicity tests shall be conducted as soon as possible following sample collection. The 36-hour sample holding time for test initiation shall be targeted. However, no more than 72 hours shall elapse before the conclusion of sample collection and test initiation.

4. Quality Assurance and Additional Requirements

Quality assurance measures, instructions, and other recommendations and requirements are found in the test methods manual previously referenced. Additional requirements are specified below.

The discharge is subject to determination of “Pass” or “Fail” from a chronic toxicity test using the Test of Significant Toxicity (TST) statistical t-test approach described in *National Pollutant Discharge Elimination System Test of Significant Toxicity Implementation Document* (EPA 833-R-10-003, 2010), Appendix A, Figure A-1 and Table A-1 and Appendix B, Table B-1. The null hypothesis (Ho) for the TST statistical approach is: Mean discharge IWC response ≤0.75 × Mean control response. A test result that rejects this null hypothesis is reported as “Pass”. A test result that does not reject this null hypothesis is reported as “Fail”. The relative “Percent Effect” at the discharge IWC is defined and reported as: ((Mean control response - Mean discharge IWC response) ÷ Mean control response)) × 100. This is a t-test (formally Student’s t-Test), a statistical analysis comparing two sets of replicate observations—in the case of WET, only two test concentrations (i.e., a control and IWC). The purpose of this statistical test is to determine if the means of the two sets of observations are different (i.e., if the IWC or receiving water concentration differs from the control (the test result is “Pass” or “Fail”)). The Welch’s t-test employed by the TST statistical approach is an adaptation of Student’s t-test and is used with two samples having unequal variances.

The chronic toxicity MDEL and MMEL are set at the IWC for the discharge (14 percent effluent) and expressed in units of the TST statistical approach (“Pass” or “Fail”, “Percent Effect”). All NPDES effluent compliance monitoring for the chronic toxicity MDEL and MMEL shall be reported using the 14 percent effluent concentration and negative control, expressed in units of the TST. The TST hypothesis (Ho) (see above) is statistically analyzed using the IWC and a negative control. Effluent toxicity tests shall be run using a multi-concentration test design when required by *Short-term Methods for Estimating the Chronic Toxicity of Effluents and Receiving Waters to Marine and Estuarine Organisms* (U.S. EPA 2002, EPA-821-R-02-014). The San Diego Board’s review of reported toxicity test results will include review of concentration-response patterns as appropriate (see Fact Sheet discussion at IV.C.5). As described in the bioassay laboratory audit directives to the San Jose Creek Water Quality Laboratory from the State Water Resources Control Board dated August 7, 2014, and from the

USEPA dated December 24, 2013, the Percent Minimum Significant Difference (PMSD) criteria only apply to compliance reporting for the no observed effect concentration (NOEC) and the sublethal statistical endpoints of the NOEC, and therefore are not used to interpret TST results. Standard Operating Procedures used by the toxicity testing laboratory to identify and report valid, invalid, anomalous, or inconclusive effluent (and receiving water) toxicity test measurement results from the TST statistical approach, including those that incorporate a consideration of concentration-response patterns, must be submitted to the San Diego Water Board (40 CFR section 122.41(h)). The San Diego Water Board will make a final determination as to whether a toxicity test result is valid, and may consult with the Discharger, USEPA, the State Water Board's Quality Assurance Officer, or the State Water Board's Environmental Laboratory Accreditation Program as needed. The Board may consider results of any Toxicity Reduction Evaluation (TRE) / TIE studies in an enforcement action.

a. The MDEL for chronic toxicity is exceeded and a violation will be flagged when a chronic toxicity test, analyzed using the TST statistical approach, results in "Fail" and the "Percent Effect" is ≥ 0.50

b. The MMEL for chronic toxicity is exceeded and a violation will be flagged when the median of no more than three independent chronic toxicity tests, conducted within the same calendar month and analyzed using the TST statistical approach, results in "Fail". The MMEL for chronic toxicity only applies when there is a discharge more than one day in a calendar month period. During such calendar months, up to three independent toxicity tests may be conducted when one toxicity test results in "Fail".

c. If the effluent toxicity test does not meet all test acceptability criteria (TAC) specified in the referenced test method, *Short-term Methods for Estimating the Chronic Toxicity of Effluents and Receiving Waters to Marine and Estuarine Organisms* (U.S. EPA 2002, EPA-821-R-02-014) (see Table E-8, below), then the Discharger must resample and re-test within 14 days.

d. Dilution water and control water, including brine controls, shall be laboratory water prepared and used as specified in the test methods manual. If dilution water and control water is different from test organism culture water, then a second control using culture water shall also be used.

e. Monthly reference toxicant testing is sufficient. All reference toxicant test results should be reviewed and reported using the EC25.

f. The Discharger shall perform toxicity tests on final effluent samples. However, ammonia shall not be removed from the effluent sample prior to toxicity testing, unless explicitly authorized under this section of the MRP and the rationale is explained in the Fact Sheet (Attachment F).

Table E-7. USEPA Test Methods and Test Acceptability Criteria

Species & USEPA Test Method Number	Test Acceptability Criteria (TAC)
Pacific topsmelt, *Atherinops affinis*, Larval Survival and Growth Test Method 1006.0 (Table 3 of the test method, above). The inland silverside minnow *Menidia beryllina* is an acceptable alternative fish species if topsmelt is unavailable at the time of testing. Test Method 1006.0 (Table 3 of the test method, above).	Pacific topsmelt, *Atherinops affinis*: 80% or greater survival in controls; average dry weight per surviving organism in control chambers equals or exceeds 0.85 mg. Percent minimum significant difference (PMSD) for survival must be < 25, and PMSD for biomass must be < 50.
Echinoderm Embryo Development Test Method using the purple sea urchin *Strongylocentrotus purpuratus* or the sand dollar *Dendraster excentricus* - (Table 3 of the test method, above).	80% or greater normal embryo development in the control and PMSD value <25.
Giant kelp, *Macrocystis pyrifera*, Germination and Growth Test Method 1009.0 (Table 3 of the test method, above).	70% or greater germination in the controls and length ≥ 10µm. PMSD for both endpoints must be < 20.

5. Preparation of an Initial Investigation TRE Work Plan

The Discharger shall prepare and submit a copy of the Discharger's initial investigation TRE work plan to the San Diego Water Board for approval within 90 days of the effective date of this permit. If the San Diego Water Board does not disapprove the work plan within 60 days, the work plan shall become effective. The Discharger shall use USEPA TRE manual, Generalized Methodology for Conducting Industrial Toxicity Reduction Evaluations (EPA/600/2-88/070, 1989) as guidance, or most current version. This work plan shall describe the steps that the Discharger intends to follow if toxicity is detected. At minimum, the work plan shall include:

a. A description of the investigation and evaluation techniques that will be used to identify potential causes and sources of toxicity, effluent variability, and treatment system efficiency.

b. A description of the Facility's methods of maximizing in-house treatment efficiency and good housekeeping practices, and a list of all chemicals used in the operation of the Facility; and,

c. If a TIE is necessary, an indication of the person who would conduct the TIEs (i.e., an in-house expert or an outside contractor).

6. Accelerated Monitoring Schedule for Median Monthly Summary Result: "Fail" and for Maximum Daily Single Result: "Fail and % Effect ≥ 50".

When there is discharge more than one day in a calendar month, the Median Monthly summary result shall be used to determine if accelerated testing needs to be conducted.

When there is discharge of only one day in a calendar month, the Maximum Daily single result shall be used to determine if accelerated testing needs to be conducted.

Once the Discharger becomes aware of this result, the Discharger shall implement an accelerated monitoring schedule. . The accelerated monitoring schedule shall consist of four toxicity tests (including the discharge IWC), conducted at approximately two week intervals, over an eight week period; in preparation for the TRE process and associated reporting, these results shall also be reported using the EC25. If each of the accelerated toxicity tests results in “Pass”, the Discharger shall return to routine monitoring for the next monitoring period. If one of the accelerated toxicity tests results in “Fail”, the Discharger shall immediately implement the TRE Process conditions set forth below. During accelerated monitoring schedules, only TST results (“Pass” or “Fail”, “Percent Effect”) for chronic toxicity tests shall be reported as effluent compliance monitoring results for the chronic toxicity MDEL and MMEL.

7. TRE Process

During the TRE Process, semiannual effluent monitoring shall resume and TST results (“Pass” or “Fail”, “Percent Effect”) for chronic toxicity tests shall be reported as effluent compliance monitoring results for the chronic toxicity MDEL and MMEL.

a. The Discharger shall immediately initiate a TRE using, according to the type of treatment facility, USEPA manual Toxicity Reduction Evaluation Guidance for Municipal Wastewater Treatment Plants (EPA/833/B-99/002, 1999) or EPA TRE manual, Generalized Methodology for Conducting Industrial Toxicity Reduction Evaluations (EPA/600/2-88/070, 1989), and, within 15 days, submit to the San Diego Water Board a Detailed TRE work plan, which shall follow the TRE work plan revised as appropriate for this toxicity event. It shall include the following information, and comply with additional conditions set by the San Diego Water Board:

   i. Further actions by the Discharger to investigate, identify, and correct the causes of toxicity.

   ii. Actions the Discharger will take to mitigate the effects of the discharge and prevent the recurrence of toxicity.

   iii. A schedule for these actions, progress reports, and the final report.

b. The Discharger may initiate a TIE as part of a TRE to identify the causes of toxicity using the same species and test method and, as guidance, USEPA manuals: Methods for Aquatic Toxicity Identification Evaluations: Phase I Toxicity Characterization Procedures (EPA/600/6-91/003, 1991); Methods for *Aquatic Toxicity Identification Evaluations, Phase II Toxicity Identification Procedures for Samples Exhibiting Acute and Chronic Toxicity* (EPA/600/R-92/080, 1993); *Methods for Aquatic Toxicity Identification Evaluations, Phase III Toxicity Confirmation Procedures for Samples Exhibiting Acute and Chronic Toxicity* (EPA/600/R-92/081, 1993); and *Marine Toxicity Identification Evaluation (TIE): Phase I Guidance Document* (EPA/600/R-96-054, 1996). The TIE should be conducted on the species demonstrating the most sensitive toxicity response.

c. Many recommended TRE elements parallel required or recommended efforts for source control, pollution prevention, and storm water control programs. TRE efforts should be coordinated with such efforts. As toxic substances are identified or characterized, the Discharger shall continue the TRE by determining the sources and evaluating alternative strategies for reducing or eliminating the substances from

the discharge. All reasonable steps shall be taken to reduce toxicity to levels consistent with toxicity evaluation parameters.

d. The Discharger shall continue to conduct routine effluent monitoring for compliance determination purposes while the TRE and/or TIE process is taking place. Additional accelerated monitoring and TRE work plans are not required once a TRE is begun.

e. The San Diego Water Board recognizes that toxicity may be episodic and identification of causes and reduction of sources of toxicity may not be successful in all cases. The TRE may be ended at any stage if monitoring finds there is no longer toxicity.

f. The San Diego Water Board may consider the results of any TRE/TIE studies in an enforcement action.

8. Reporting

The Self-Monitoring Report (SMR) shall include a full laboratory report for each toxicity test. This report shall be prepared using the format and content of the test methods manual chapter called Report Preparation, and shall include:

a. The valid toxicity test results for the TST statistical approach, reported as “Pass” or “Fail” and “Percent Effect” at the chronic toxicity IWC for the discharge. All toxicity test results (whether identified as valid or otherwise) conducted during the calendar month shall be reported on the SMR due date specified in Table E-9.

g. Summary water quality measurements for each toxicity test (e.g., pH, dissolved oxygen, temperature, conductivity, hardness, salinity, chlorine, ammonia).

h. The statistical analysis used in *National Pollutant Discharge Elimination System Test of Significant Toxicity Implementation Document* (EPA 833-R-10-003, 2010) Appendix A, Figure A-1 and Table A-1, and Appendix B, Table B-1.

i. TRE/TIE results. The San Diego Water Board shall be notified no later than 30 days from completion of each aspect of TRE/TIE analyses. Prior to the completion of the final TRE/TIE report, the Discharger shall provide status updates in the semiannual self-monitoring reports, indicating which TRE/TIE steps are underway and which steps have been completed.

j. Statistical program (e.g., TST calculator, CETIS, etc.) output results, including graphical plots, for each toxicity test.

k. Graphical plots clearly showing the laboratory’s performance for the reference toxicant for the previous 20 tests and the laboratory’s performance for the control mean, control standard deviation, and control coefficient of variation for the previous 12-month period.

l. Any additional QA/QC documentation or any additional chronic toxicity-related information, upon written request from the San Diego Water Board.

D. Reclamation Monitoring Requirements – Not Applicable

IV. RECEIVING WATER MONITORING REQUIREMENTS – SURFACE WATER AND GROUNDWATER

Receiving water and sediment monitoring in the vicinity of the Facility discharge shall be conducted as specified below. The overall receiving water monitoring program is intended to answer the following questions:

(1) Does the receiving water meet water quality standards?

(2) Are the receiving water conditions getting better or worse over time?

(3) Does the effluent cause or contribute to an exceedance of the water quality standards in the receiving water?

(4) Are densities of bacteria in water contact areas below levels protective of public health?

Station location, sampling, sample preservation and analyses, when not specified, shall be by methods approved by the San Diego Water Board. The monitoring program may be modified by the San Diego Water Board at any time.

During monitoring events sample stations shall be located using a land-based microwave positioning system or a satellite positioning system such as global positioning system. If an alternate navigation system is proposed, its accuracy should be compared to that of microwave and satellite based systems, and any compromises in accuracy shall be justified.

A. Surf Zone Water Quality Monitoring

All surf zone stations shall be monitored as follows:

1. Grab samples shall be collected and analyzed for total and fecal coliform and enterococcus bacteria at a minimum frequency of once per week with at least five samples collected within any 30-day period. If possible, surf zone samples shall be taken when Outfall 004b has had a filter backwash discharge and the discharge has reached or has the potential to reach the surf zone.

2. If a single sample exceeds any of the single sample bacterial standards, repeat sampling at that location shall be conducted to determine the extent and persistence of the exceedance. Repeat sampling shall be conducted within 24 hours of receiving analytical results and continued until the sample result is less than the single sample bacterial standards or until a sanitary survey is conducted that determines the source of the high bacterial densities.

Single sample bacterial standard include:

a. Total coliform density will not exceed 10,000 per 100 ml; or

b. Fecal coliform density will not exceed 400 per 100 ml; or

c. Total coliform density will not exceed 1,000 per 100 ml when the ratio of fecal/total coliform exceeds 0.1;

d. Enterococcus density will not exceed 104 per 100 ml.

3. At the same time that samples are collected from surf zone stations, the following information shall be recorded: observation of wind (e.g., direction and speed), weather (e.g., cloudy, sunny, or rainy), current (e.g., direction and speed), and tidal conditions; observations of water color, discoloration, oil and grease, turbidity, odor, and materials of sewage, storm water, or seawater system origin in the water or on the beach; filter

backwash discharge from Outfall 004b and if the discharge reached the surf zone, and water temperature (°C).

4. Monitoring samples collected by the County of San Diego may be used in the monitoring report for compliance with the bacterial monitoring requirements.

B. Monitoring Location RSW-001

The Discharger shall monitor the receiving water at Monitoring Location RSW-01 twice annually, once during the dry weather and once during the wet weather, for the parameters listed in Table E-8 below. During wet weather, the receiving water must be sampled both before and during a storm event. The sampling during a storm water discharge event shall occur either during the storm water discharge or after the storm has passed and when the Discharger can safely collect a receiving water sample that is representative of storm water discharge conditions. During wet weather, a reference site shall also be monitored for Ocean Plan Table 1 parameters as a proxy for natural water quality. The requirement for wet weather receiving water and reference site monitoring may be met by participating in a regional monitoring program approved by the Deputy Director of the State Water Board Division of Water Quality.[1]

Table E-8. Receiving Water Monitoring Requirements

Parameter	Units	Sample Type	Minimum Sampling Frequency	Required Analytical Test Method
Total coliform	CFU/100 mL	grab	2/year	[1]
Fecal coliform	CFU/100 mL	grab	2/year	[1]
enterococcus	CFU/100 mL	grab	2/year	[1]
Ocean Plan Table 1 Parameters, except acute toxicity	µg/l	grab/24-hour composite[2]	2/year	[1]

1. Analytical methods as required under 40 CFR part 136.
2. Total phenols and volatile organics shall be grab samples.

C. Benthic Survey

Once every permit cycle, a quantitative survey of benthic marine life must be performed to determine the concentrations of metals near field and far field (up and down coast, and offshore) in the ASBS. The San Diego Water Board Executive Officer, in consultation with the Deputy Director or designee at the State Water Board Division of Water Quality, must approve the survey design. The results of the survey must be completed and submitted to the San Diego Water Board within six months before the end of the permit cycle. Alternatively, this requirement may be met by participating in a regional monitoring program approved by the Deputy Director of the State Water Board Division of Water Quality. [2]

[1] State Water Board Resolution, *Approving an Exception to the California Ocean Plan for the University of California San Diego Scripps Institution Of Oceanography and Adopting an Addendum to the Initial Study/Mitigated Negative Declaration*, Appendix A, Condition 12.

[2] State Water Board Resolution, *Approving an Exception to the California Ocean Plan for the University of California San Diego Scripps Institution Of Oceanography and Adopting an Addendum to the Initial Study/Mitigated Negative Declaration*, Appendix A, Condition 9.

V. REGIONAL MONITORING REQUIREMENTS

Regional ocean water monitoring provides information about the sources, fates, and effects of anthropogenic contaminants in the coastal marine environment necessary to make assessments over large areas. The large scale assessments provided by regional monitoring describe and evaluate cumulative effects of all anthropogenic inputs and enable better decision making regarding protection of beneficial uses of ocean waters. Regional monitoring data assists in the interpretation of core monitoring studies by providing a more accurate and complete characterization of reference conditions and natural variability. Regional monitoring also leads to methods standardization and improved quality control through intercalibration exercise. The coalitions, that are implementing regional monitoring, enable sharing of technical resources, trained personnel, and associated costs. Focusing these resources on regional issues and developing a broader understanding of pollutants effects in ocean waters enables the development of more rapid and effective response strategies. Based on all of these considerations the San Diego Water Board supports regional approaches to monitoring ocean waters.

The Discharger shall, as directed by the San Diego Water Board, participate with other regulated entities, other interested parties, and the San Diego Water Board in development and implementation of new and improved monitoring and assessment programs for ocean waters in the San Diego Region and discharges to those waters. These programs shall be developed and implemented so as to:

(1) Determine the status and trends of conditions in ocean waters in the San Diego Region with regard to beneficial uses, e.g.,

   i. Are fish and shellfish safe to eat?

   ii. Is water quality safe for swimming?

   iii. Are ecosystems healthy?

(2) Identify the primary stressors causing or contributing to conditions of concern;

(3) Identify the major sources of the stressors causing or contributing to conditions of concern; and

(4) Evaluate the effectiveness (i.e., environmental outcomes) of actions taken to address such stressors and sources.

Development and implementation of new and improved monitoring and assessment programs for ocean waters will be guided by the following:

1. Water Quality Control Plan Ocean Waters of California (Ocean Plan);

2. San Diego Water Board Resolution No. R9-2012-0069, “Resolution in Support of A Regional Monitoring Framework;”

3. San Diego Water Board staff report entitled “A Framework for Monitoring and Assessment in the San Diego Region;” and

4. Other guidance materials, as appropriate.

<u>Southern California Bight Monitoring Program Participation Requirements</u>

The Discharger is required to participate in the, Southern California Bight Regional Monitoring Program coordinated by the Southern California Coastal Water Research Project (SCCWRP), or any other coordinator named by the San Diego Water Board, pursuant to Water Code sections 13267, 13383, and 40 CFR section 122.48. The intent of the Southern California

Bight Regional Monitoring Program is to maximize the efforts of all monitoring partners using a more cost-effective monitoring design and to best utilize the pooled scientific resources of the Southern California Bight.

As noted in section IV of this MRP, the requirement for wet weather receiving water and reference site monitoring and quantitative survey of benthic marine life may be met by participating in a regional monitoring program approved by the Deputy Director of the State Water Board Division of Water Quality. [3]

VI. SPECIAL STUDIES AND OTHER MONITORING REQUIREMENTS

The discharger shall log all chemical additives, if any, discharged via the seawater system to the ocean. The log shall include the chemical, time, date, concentration, quantity, location, identification of personnel that added the chemicals, and outfall that discharged the chemicals. The log shall be included as a pdf attachment in the quarterly report. If no chemical additives were discharged via the seawater system to the ocean for the calendar year, the Discharger shall record this in the log and report this in the quarterly report for that quarter.

VII. REPORTING REQUIREMENTS

A. General Monitoring and Reporting Requirements

1. The Discharger shall comply with all Standard Provisions (Attachment D of this Order) related to monitoring, reporting, and recordkeeping.

2. The Discharger shall report in its cover letter all instances of noncompliance with this Order at the time monitoring reports are submitted. Any instances previously reported shall be identified. The reports shall contain the information listed in Attachment D, section V.E of this Order.

B. Self-Monitoring Report (SMR) Submittal

1. The Discharger shall electronically submit SMRs using the State Water Board's California Integrated Water Quality System (CIWQS) Program website (http://www.waterboards.ca.gov/ciwqs/index.html). SMRs must be signed and certified as required by the Standard Provisions (Attachment D). The CIWQS website will provide additional information for SMR submittal in the event of a planned or unplanned service interruption for electronic submittal. The Discharger shall maintain sufficient staffing and resources to ensure it submits SMRs that are complete and timely. This includes provision for training and supervision of individuals on how to prepare and submit SMRs. Any reports unable to be submitted via CIWQS shall be submitted electronically to the San Diego Water Board's email at sandiego@waterboards.ca.gov or as otherwise directed by the San Diego Water Board.

2. The Discharger shall report in the SMR the results for all monitoring specified in this MRP. The Discharger shall submit SMRs including the results of all required monitoring using USEPA-approved test methods or other test methods specified in this Order. If the Discharger monitors any pollutant more frequently than required by this Order, the results of this monitoring shall be included in the calculations and reporting of the data submitted in the SMR. When CIWQS does not provide for entry into a tabular format within the system, the Discharger shall electronically submit the data in a tabular format as an attachment.

[3] State Water Board Resolution, *Approving an Exception to the California Ocean Plan for the University of California San Diego Scripps Institution Of Oceanography and Adopting an Addendum to the Initial Study/Mitigated Negative Declaration*, Appendix A, Conditions 9 and 12

3. Unless otherwise noted in the MRP, monitoring periods and reporting for all required monitoring shall be completed according to the following schedule:

Table E-9. Monitoring Periods and Reporting Schedule

Sampling Frequency	Monitoring Period Begins On…	Monitoring Period	SMR Due Date
Quarterly[1]	Closest of January 1, April 1, July 1, or October 1 following (or on) permit effective date	January 1 through March 31 April 1 through June 30 July 1 through September 30 October 1 through December 31	June 1 September 1 December 1 March 1
Continuous	First day of the calendar month following the permit effective date or on permit effective date if that date is first day of the month.	January 1 through June 30 July 1 through December 31	September 1 March 1
Semiannually	Closest of January 1 or July 1 following (or on) permit effective date.	January 1 through June 30 July 1 through December 31	September 1 March 1
Annually	January 1 following (or on) permit effective date.	January 1 through December 31	March 1

1. See section VI, Special Studies and Other Monitoring Requirements, of this Monitoring and Reporting Program.

4. **Reporting Protocols**. The Discharger shall report with each sample result the applicable reported minimum level (reported ML, also known as the reporting level) and the current method detection limit (MDL), as determined by the procedure in 40 CFR part 136. For each numeric effluent limitation or performance goal for a parameter identified in Table 1 of the Ocean Plan, the Discharger shall not use a ML greater than that specified in Appendix II of the Ocean Plan.

   The Discharger shall report the results of analytical determinations for the presence of chemical constituents in a sample using the following reporting protocols:

   a. Sample results greater than or equal to the reported ML shall be reported as measured by the laboratory (i.e., the measured chemical concentration in the sample). Sample results less than the reported ML, but greater than or equal to the laboratory's MDL, shall be reported as "Detected, but Not Quantified," or DNQ. The estimated chemical concentration of the sample shall also be reported.

   b. For the purposes of data collection, the laboratory shall write the estimated chemical concentration next to DNQ. The laboratory may, if such information is available, include numerical estimates of the data quality for the reported result. Numerical estimates of data quality may be percent accuracy (± a percentage of the reported value), numerical ranges (low to high), or any other means considered appropriate by the laboratory.

   c. Sample results less than the laboratory's MDL shall be reported as "Not Detected," or ND.

   d. The Discharger shall instruct laboratories to establish calibration standards so that the ML value (or its equivalent if there is differential treatment of samples relative to calibration standards) is the lowest calibration standard. At no time is the Discharger to use analytical data derived from extrapolation beyond the lowest point of the calibration curve.

5. **Compliance Determination.** Compliance with effluent limitations for reportable pollutants shall be determined using sample reporting protocols defined above and Attachment A of this Order. For purposes of reporting and administrative enforcement by the San Diego Water Board and State Water Board, the Discharger shall be deemed out of compliance with effluent limitations if the concentration of the reportable pollutant in the monitoring sample is greater than the effluent limitation and greater than or equal to the reported ML.

6. **Multiple Sample Data**. When determining compliance with a measure of central tendency (arithmetic mean, geometric mean, median, etc.) of multiple sample analyses and the data set contains one or more reported determinations of DNQ or ND, the Discharger shall compute the median in place of the arithmetic mean in accordance with the following procedure:

   a. The data set shall be ranked from low to high, ranking the reported ND determinations lowest, DNQ determinations next, followed by quantified values (if any). The order of the individual ND or DNQ determinations is unimportant.

   b. The median value of the data set shall be determined. If the data set has an odd number of data points, then the median is the middle value. If the data set has an even number of data points, then the median is the average of the two values around the middle unless one or both of the points are ND or DNQ, in which case the median value shall be the lower of the two data points where DNQ is lower than a value and ND is lower than DNQ.

7. Violations. The SMRs shall clearly identify violations of the WDRs; discuss corrective actions taken or planned; and the proposed time schedule for corrective actions. Identified violations must include a description of the requirement that was violated and a description of the violation.

A. Discharge Monitoring Reports (DMRs)

Dischargers operating a “minor” facility, if so designated in the Fact Sheet, are currently excepted from submitting DMRs under these requirements. However, at any time during the term of this permit, the State Water Board or San Diego Water Board may notify such a Discharger to submit DMRs, at which time this exception will no longer apply.

B. Other Reports

The following reports are required under Special Provisions (section VI.C), Attachment E section VI, and the California Code of Regulations and shall be submitted to the San Diego Water Board, signed and certified as required by the Standard Provisions (Attachment D):

Table E-10. Reporting Requirements for Special Provisions Progress Reports

Report Name	Section No.	Report Due Date
Discharge Notification from the SIO Building D	Section VI.C.2.b of this Order	90 days prior to discharge
TRE Work Plan	Section III.C.6 of this Monitoring and Reporting Program	Within 90 days of the effective date of this permit
TRE Work Plan and Report	Section III.C.8 and 9 of this Monitoring and Reporting Program	As specified in section III.C.8 and 9 of this Monitoring and Reporting Program
Report of Waste Discharge (ROWD) (for reissuance)	Title 23, California Code of Regulations	180 days before the Order expiration date

ATTACHMENT F – FACT SHEET

Table of Contents

I. Permit Information F-3
II. Facility Description F-4
A. Description of Wastewater and Biosolids Treatment or Controls F-7
B. Discharge Points and Receiving Waters F-7
C. Summary of Existing Requirements and Self-Monitoring Report (SMR) Data F-8
D. Compliance Summary F-12
E. Planned Changes – Not Applicable F-13
III. Applicable Plans, Policies, and Regulations F-13
A. Legal Authorities F-13
B. California Environmental Quality Act (CEQA) F-13
C. State and Federal Regulations, Policies, and Plans F-13
D. Impaired Water Bodies on CWA 303(d) List F-15
E. Other Plans, Polices and Regulations F-16
IV. Rationale For Effluent Limitations and Discharge Specifications F-17
A. Discharge Prohibitions F-17
B. Technology-Based Effluent Limitations F-18
C. Water Quality-Based Effluent Limitations (WQBELs) F-20
D. Final Effluent Limitations F-27
E. Interim Effluent Limitations – Not Applicable F-29
F. Performance Goals F-30
G. Land Discharge Specifications – Not Applicable F-30
H. Reclamation Specifications – Not Applicable F-30
V. Rationale for Receiving Water Limitations F-30
VI. Rationale for Provisions F-31
A. Standard Provisions F-31
B. Special Provisions F-31
1. Reopener Provisions F-31
2. Special Studies and Additional Monitoring Requirements F-31
3. Best Management Practices and Pollution Prevention F-32
4. Construction, Operation, and Maintenance Specifications – Not Applicable F-32
5. Special Provisions for Municipal Facilities (Publicly-Owned Treatment Works Only) – Not Applicable F-32
6. Other Special Provisions – Not Applicable F-32
7. Compliance Schedules – Not Applicable F-32
VII. Rationale for Monitoring and Reporting Requirements F-33
A. Core Monitoring Requirements F-33
B. Receiving Water Monitoring F-35
C. Regional Monitoring Requirements F-35
D. Other Monitoring Requirements F-35
VIII. Public Participation F-35
A. Notification of Interested Parties F-35
B. Written Comments F-35
C. Public Hearing F-36
D. Appeal of Waste Discharge Requirements F-36
E. Information and Copying F-36
F. Register of Interested Persons F-36

G. Additional Information F-36

List of Tables

Table F-1. Facility Information F-3
Table F-2. Seawater Locations and Discharge Category F-6
Table F-3. Historic Effluent Limitations and Monitoring Data - Table 2 Constituents F-9
Table F-4. Historic Effluent Limitations and Monitoring Data for Protection of Aquatic Life F-10
Table F-5. Historic Effluent Limitations and Monitoring Data for Human Health Carcinogens F-11
Table F-6. Basin Plan Beneficial Uses F-14
Table F-7. Basin Plan Beneficial Uses F-14
Table F-8. Summary of Technology-based Effluent Limitations F-20
Table F-9. Background Seawater Concentrations (Cs), Table 3 of the Ocean Plan F-24
Table F-10. Water Quality Objectives for Copper (Co), Table 1 of the Ocean Plan F-24
Table F-11. Summary of Water Quality-based Effluent Limitations[1] F-25

ATTACHMENT F – FACT SHEET

As described in section II.B of this Order, the San Diego Water Board incorporates this Fact Sheet as findings of the San Diego Water Board supporting the issuance of this Order. This Fact Sheet includes the legal requirements and technical rationale that serve as the basis for the requirements of this Order.

This Order has been prepared under a standardized format to accommodate a broad range of discharge requirements for dischargers in California. Only those sections or subsections of this Order that are specifically identified as "not applicable" have been determined not to apply to this Discharger. Sections or subsections of this Order not specifically identified as "not applicable" are fully applicable to this Discharger.

I. PERMIT INFORMATION

The following table summarizes administrative information related to the Facility.

Table F-1. Facility Information

WDID	9 000000018
Discharger	University of California, San Diego
Name of Facility	University of California, San Diego – Scripps Institution of Oceanography
Facility Address	9500 Gilman Drive
	San Diego, CA 92023-0089
	San Diego County
Facility Contact, Title and Phone	Kimberly O'Connell, Environmental Specialist, 858-534-6018
Authorized Person to Sign and Submit Reports	Julie Hampel, Environmental Manager, 858-534-1563
Mailing Address	9500 Gilman Drive MC 0089, San Diego, 92023
Billing Address	Same as Mailing Address
Type of Facility	Educational Services; SIC Code 8221
Major or Minor Facility	Minor
Threat to Water Quality	2
Complexity	B
Pretreatment Program	not applicable
Reclamation Requirements	not applicable
Facility Permitted Flow	1.25 million gallons per day (MGD)
Facility Design Flow	1.25 MGD
Watershed	Pacific Ocean
Receiving Water	Pacific Ocean
Receiving Water Type	Ocean

A. University of California, San Diego (Discharger) is the owner and operator of the University of California, San Diego – Scripps Institution of Oceanography (Facility), an aquaria, research, and higher educational facility.

For the purposes of this Order, references to the "discharger" or "permittee" in applicable federal and state laws, regulations, plans, or policy are held to be equivalent to references to the Discharger herein.

B. The Facility discharges aquaria wastewater, seawater, filter backwash water, storm water, and urban runoff to the Pacific Ocean, a water of the United States. The Discharger was previously regulated by Order No. R9-2005-0008, National Pollutant Discharge Elimination System (NPDES) Permit No. CA0107239, which was adopted on February 9, 2005 and expired on February 9, 2010. In accordance with Code of Federal Regulations, title 40 (40 CFR) section 122.6 and the State's regulations at title 23, division 3, chapter 9, article 3, section 2235.4 of the California Code of Regulations, the terms of the existing Order were administratively extended and continued in effect after the permit expiration date until the effective date of this Order.

C. The Discharger requested an exception to the Water Quality Control Plan for Ocean Waters of California, California Ocean Plan (Ocean Plan) for the Facility's discharge into the San Diego-Scripps Area of Special Biological Significance (ASBS) (previously named San Diego Marine Life Refuge ASBS). On July 22, 2004, the State Water Resources Control Board (State Water Board) granted the request through adoption of Resolution No. 2004-0052.[1] Resolution No. 2004-0052 establishes requirements and conditions applicable to the discharges into the ASBS from the seawater system at the Facility and from the municipal storm water collection system. These conditions were incorporated into Order No. R9-2005-0008. Resolution No. 2004-0052 expires with the expiration of Order No. R9-2005-0008.

D. On August 5, 2009, the Discharger submitted a request to the State Water Board for a renewal of the exception to the Ocean Plan for the Facility discharge into the San Diego-Scripps ASBS. On April 21, 2015, the State Water Resources Control Board adopted a resolution, *Approving an Exception to the California Ocean Plan for the University of California San Diego Scripps Institution Of Oceanography and Adopting an Addendum to the Initial Study/Mitigated Negative Declaration* (Ocean Plan Exception).[2] The Ocean Plan Exception states that all of the conditions in the exception adopted under Resolution No. 2004-0052 were met in full by the Discharger.

E. The Discharger filed a report of waste discharge (ROWD) and submitted an application for renewal of its waste discharge requirements (WDRs) and NPDES permit on August 6, 2009. The application was deemed complete on September 6, 2009. A site visit was conducted on May 28, 2013 and April 15, 2015, to observe operations and collect additional information to develop permit limitations and requirements for WDRs.

II. FACILITY DESCRIPTION

The Facility is located along the coast immediately southwest of the University of California, San Diego's main campus and includes a span of approximately 3,000 feet of ocean frontage. The Facility property includes numerous buildings located along the ocean to the west of La Jolla Shores Drive as well as on the hillside between La Jolla Shores Drive and Torrey Pines Road, which contains the Birch Aquarium at Scripps, Coast Apartments, and other facilities and surrounding open space areas. La Jolla Shores residential uses are located to the south of the Facility and La Jolla Farms residences and the National Marine Fisheries Service are located to the north of the Facility.

[1] Resolution No. 2004-0052, *Approving An Exception To The California Ocean Plan (Ocean Plan) For The University Of California Scripps Institution Of Oceanography Discharge Into The San Diego Marine Life Refuge Area Of Special Biological Significance And Adopting A Mitigated Negative Declaration*, adopted by the State Water Boad on July 22, 2004.
[2] Adopted resolution is currently a waiting on a resolution number.

The Facility has maintained a seawater system to support its research and teaching mission since 1910. The seawater system currently supplies 0.50 to 0.75 MGD of seawater to laboratories and aquaria within the Facility boundaries. The seawater is ultimately discharged back to the ocean through four outfalls (Outfalls 001, 003, 004a, and 004b). The area of discharge is within the San Diego-Scripps ASBS.

The following facilities (located within the Facility's boundaries) utilize seawater:

- Birch Aquarium at Scripps (public education and outreach)
- Hubbs Hall (marine research)
- The Experimental Aquarium (marine research)
- The Electromagnetic Facility (shark tank)
- NOAA National Marine Fisheries - Southwest Fisheries Science Center (marine research)
- Ring Tank (marine research, closed in 2004)
- Scholander Hall (marine research, closed in 2013)
- Hydraulics Laboratory (marine research)
- OAR Keck Center (ocean atmosphere research)
- Marine Ecosystem Sensing, Observation and Modeling Laboratory (MESOM) (marine research)
- Scripps Institution of Oceanography (SIO) Building D (scheduled to begin operations in 2016 or 2017)

The Facility generates the following types of discharges:

1. *Indigenous Species Discharge* – Seawater that has flowed through an aquarium tank or other facility that contains only plants and/or animals whose historic or native recorded range includes the waters of the State of California;
2. *Non-Indigenous Species (NIS) Discharge* – Seawater that has flowed through an aquarium tank or other facility that contains plants and/or animals whose historic or native recorded range does not include the waters of the State of California;
3. *Non-Species Discharge* – Seawater that is used for research that does not utilize marine organisms, such as physical and atmospheric oceanography;
4. *Unfiltered Raw Seawater* – Seawater that comes directly from the seawater pumps at the end of Scripps Institution of Oceanography (SIO) Pier and has not yet been filtered;
5. *Filtered Seawater* – Seawater that has been filtered and is stored in the seawater storage tanks. This water has not come in contact with any aquarium tanks; and
6. *Filter Backwash Seawater* – Seawater that is used to backwash the filters.

In addition, seawater used in aquaria with indigenous and non-indigenous species may be medicated with copper sulfate and/or other antibiotics to treat diseases or prevent outbreaks and to maintain a suitable aquaria environment. Seawater used for physical and atmospheric oceanography research may be treated with chemicals. The Discharger re-plumbed the seawater system by diverting seawater treated with medication/chemicals to the San Diego Metropolitan Sewerage System and installed a 12,500-gallon holding tank to prevent seawater treated with medication/chemicals from being discharged to the ocean outfalls. Seawater treated with chemicals is discharged to the San Diego Metropolitan Sewerage System in accordance with guidelines established by the City of San Diego, Public Utilities Department.

According to an email from the Discharger, dated October 7, 2015, the Facility does not meet the definition of a Concentrated Aquatic Animal Production (CAAP) Facility, as defined in 40 CFR part 122, Appendix C. The Facility is below the quantity threshold for the amount of fish produced (9,090 harvest weight kilograms) and for the amount of food fed (less than 5,000 pounds/month). Because the Facility does not meet the definition of a Concentrated Aquatic Animal Production (CAAP) Facility, as specified in 40 CFR part 122, Appendix C, the best management practices

(BMPs) contained in the Compliance Guide for the Concentrated Aquatic Animal Production Point Source Category (http://water.epa.gov/scitech/wastetech/guide/aquaculture/upload/2006_05_03_guide_aquaculture_guidance_full-final.pdf) have not been incorporated into this Order.

The table below summarizes the existing seawater discharge conditions by the Facility and indicates if chemical treatments are added to the seawater.

Table F-2. Seawater Locations and Discharge Category

Location	Seawater Discharge Category	Chemical Additives	Seawater Return Discharge Destination
Birch Aquarium	Indigenous Species and NIS Discharge; Filter Backwash Seawater	Chemical and antibiotic treatments	Sanitary Sewer
		None	Outfall 001 Seawater from tanks containing NIS is treated prior to discharge
Hubbs Hall	Indigenous Species and NIS Discharge	None	Outfall 001 Seawater from tanks containing NIS is treated prior to discharge
		Chemicals and bleach to clean tanks	Sanitary Sewer
Experimental Aquarium	Indigenous Species Discharge	None	Outfall 003
		Chemicals and bleach to clean tanks	Sanitary Sewer
Electromagnetic Facility	Indigenous Species Discharge	None	Outfall 001
NOAA National Marine Fisheries – Southwest Fisheries Science Center	Indigenous Species Discharge	None	Outfall 001
Ring Tank[1]	Indigenous Species Discharge	None	Outfall 003
Scholander Hall (marine research, closed in 2013)	Indigenous Species Discharge	None	Sanitary Sewer
Hydraulics Laboratory	Non-Species Discharge	Tracer Dye and Chlorine	Sanitary Sewer
Oakland (OAK) Keck Center	Non-Species Discharge	Chlorine	Sanitary Sewer
MESOM	Non-Species Discharge	None	Sanitary Sewer
SIO Building D	To be determined, scheduled to begin operations in 2016 or 2017	To be determined, scheduled to begin operations in 2016 or 2017	Outfall 001
Seawater Storage Tanks	Filtered Seawater	None	Outfalls 001 and 003
Settling Tanks	Unfiltered Raw Seawater	None	Outfall 004a
Filter System	Filter Backwash Water	None	Outfall 004b

1. Ring Tank is not in use; there is currently no discharge.

A. Description of Wastewater and Biosolids Treatment or Controls

An average of 500,000 to 750,000 gallons per day (gpd) of seawater is pumped from the Pacific Ocean by intake pumps located below the seaward end of SIO Pier. The incoming seawater travels through a flume on the SIO Pier, into one of two 20,000-gallon concrete settling tanks and is then filtered through one of four high-speed sand filters. Once filtered, the water is pumped to three 60,000-gallon storage tanks where it is then delivered to the laboratories and aquaria within the Facility, including the Birch Aquarium at Scripps and the NOAA National Marine Fisheries – Southwest Fisheries Science Center. In addition, seawater is pumped back to the SIO Pier for use on the pier as well as to a public seawater dispensing station at the foot of the pier.

Birch Aquarium and Hubbs Hall are the only facilities that house aquaria containing NIS. Both facilities have adopted standard operating procedures that specify the administrative controls that are implemented to prevent the release of NIS into the ocean.

The Discharger conducted a pilot study to evaluate the effectiveness of non-chemical treatments (e.g., filtration, ultraviolet (UV) exposure, and ozonation) at inactivating 99% of NIS from seawater effluent discharges. The study was performed from August 2006 – December 2008 at Birch Aquarium and at Hubbs Hall in coordination with the California Department of Fish and Game. The objective of the pilot testing was to determine the combination of treatments, along with their corresponding doses and exposure periods, which would most efficiently achieve a 99% kill rate while removing the resultant toxicity before the seawater is discharged. The results of the study were used to identify the appropriate size and type of equipment for two separate full-scale NIS treatment systems; one at Birch Aquarium and one at Hubbs Hall.

In 2011, USCD/SIO installed an NIS treatment system at Hubbs Hall to inactivate potential NIS in the seawater effluent through filtration and exposure to UV light based on the results of the above pilot study. In the fall of 2012, an NIS treatment system for Birch Aquarium was installed that includes filtration, UV exposure, and ozonation. This system treats seawater effluent from the aquaria tanks that contain NIS.

B. Discharge Points and Receiving Waters

The Facility averages a discharge flow rate of 0.6 MGD with a maximum daily flow rate of 1.25 MGD. The aquaria wastewater, filtered seawater, unfiltered raw seawater, filter backwash, and storm water discharge from the outfalls onto the beach where it flows across the sand into the San Diego-Scripps ASBS. A minimum dilution factor of seven to one has been established by the San Diego Water Board in Resolution No. R9-2008-0139 based on the results of a dilution and dispersion study submitted to the San Diego Water Board on February 9, 2007 (see section IV.C.3 of this Fact Sheet for more details).

Flows per outfall are summarized as follows:

Outfall 001: Outfall 001 is located approximately 500 feet north of SIO Pier and discharges approximately 470,000 to 700,000 gpd of aquaria wastewater/filtered seawater that has circulated through the Birch Aquarium at Scripps, Hubbs Hall Aquaria, Electromagnetic Facility, and NOAA National Marine Fisheries – Southwest Fisheries Science Center Aquaria. The daily average flow in 2014 was approximately 530,000 gpd. This flow also includes intermittent discharges ranging from 7,500 gpd to 60,000 gpd that occur several times per year from one 60,000-gallon and two 7,500-gallon seawater storage tanks when they are drained for maintenance. The NOAA National Marine Fisheries - Southwest Fisheries Science Center discharges approximately 115,200 gpd. The SIO Building D is scheduled to discharge

to Outfall 001 beginning in 2016 or 2017. As of October 2008, the aquaria wastewater and storm water systems were separated all the way to the Outfall 001 concrete spill wall and the monitoring vault for the aquaria wastewater is upstream of the concrete spill wall. As of October 2008, monitoring results for Outfall 001 only represent the aquaria wastewater. There is no separate monitoring vault for Outfall 001 storm water.

Outfall 002: Outfall 002 is located approximately 240 feet south of SIO Pier, immediately downstream of two ecology embankment/media filtration systems.

Outfall 003: Outfall 003 is located approximately 10 feet north of SIO Pier and discharges approximately 80,000 to 350,000 gpd of aquaria wastewater/filtered seawater from the Experimental Aquarium (including 5,000-gallon research tank outside), intermittent discharges from three 60,000-gallon seawater storage tanks when a tank is drained for maintenance (several times a year per tank), and approximately 100,000 gpd from the Ring Tank Complex when it is in use (has not been used since 2004). In early 2010, the storm water that previously discharged to Outfall 003 was re-routed to an ecology embankment/media filter for treatment and discharges to Outfall 002.

Outfall 004A: Outfall 004a is comprised of two separate pipe outlets that are approximately 30 feet apart south of SIO Pier and intermittently discharges approximately 19,000 gpd of unfiltered raw seawater (14 – 19 batch discharges per year) when the settling tanks are switched or a settling tank is drained for maintenance.

Outfall 004B: Outfall 004B is located south of SIO Pier and north of Outfall 004a. Discharges range from 10,000 to 60,000 gpd of filter backwash depending on the number of times per day the sand filters are backwashed. The filters are backwashed more frequently, for example, when there are algae blooms or high amounts of waste or debris in the intake water.

C. Summary of Existing Requirements and Self-Monitoring Report (SMR) Data

Effluent limitations contained in the existing Order for discharges from Outfalls 001, 003, 004a, and 004b and representative monitoring data from the term of Order No. R9-2005-0008 are summarized below in Tables F-3 through F-5.

For Outfall 001, wet weather data was not used from February 2005 to January 2008. As of October 2008, the aquaria wastewater and storm water systems were separated all the way to the Outfall 001 concrete spill wall and the monitoring vault is upstream of the concrete spill wall. As of October 2008, monitoring results for Outfall 001 only represent the aquaria wastewater and filtered seawater.

For Outfall 003, wet weather data was not used from February 2005 to December 2009. In early 2010, the storm water that previously discharged to Outfall 003 was re-routed to an ecology embankment/media filter for treatment and discharges to Outfall 002. As of early 2010, monitoring results for Outfall 001 only represent the aquaria wastewater and filtered seawater.

Table F-3. Historic Effluent Limitations and Monitoring Data - Table 2 Constituents

Parameter	Units	Effluent Limitation			Monitoring Data (From 02/2005 – To 3/2015)		
		Average Monthly	Average Weekly	Maximum Daily	Highest Average Monthly Discharge	Highest Average Weekly Discharge	Highest Daily Discharge
Outfall 001							
Oil and Grease	mg/L	25	40	75	2.9	2.9	2.9
Suspended Solids	mg/L	60	NA	120	20	--	20
Settleable Solids	ml/L	1.0	1.5	3.0	ND	ND	ND
Turbidity	NTU	75	100	225	1.3	1.3	1.3
pH	pH Units	Within 6.0 to 9.0 at all times			--	--	8.1
Outfall 003							
Oil and Grease	mg/L	25	40	75	2.5	2.5	2.5
Suspended Solids	mg/L	60	NA	120	35.8	--	35.8
Settleable Solids	ml/L	1.0	1.5	3.0	ND	ND	ND
Turbidity	NTU	75	100	225	11.2	11.2	11.2
pH	pH Units	Within 6.0 to 9.0 at all times			--	--	8.1
Outfall 004a							
Oil and Grease	mg/L	25	40	75	ND	ND	ND
Suspended Solids	mg/L	60	NA	120	ND	--	ND
Settleable Solids	ml/L	1.0	1.5	3.0	ND	ND	ND
Turbidity	NTU	75	100	225	3.2	3.2	3.2
pH	pH Units	Within 6.0 to 9.0 at all times			--	--	8.2
Outfall 004b							
Oil and Grease	mg/L	25	40	75	1.9	1.9	1.9
Suspended Solids	mg/L	60	NA	120	121	--	121
Settleable Solids	ml/L	1.0	1.5	3.0	2.0	2.0	2.0
Turbidity	NTU	75	100	225	50.3	50.3	50.3
pH	pH Units	Within 6.0 to 9.0 at all times			--	--	8.13

Table F-4. Historic Effluent Limitations and Monitoring Data for Protection of Aquatic Life

Parameter	Units	Effluent Limitation			Monitoring Data (From 02/2005 – To 3/2015)		
		6-Month Median	Daily Maximum	Instantaneous Maximum	Highest Average 6-Month Median	Highest Average Daily Maximum	Highest Instantaneous Maximum
Outfall 001							
Copper	µg/L	10	82	226	3.36	10.40	10.40
Zinc	µg/L	104	584	1544	10	10	10
Total Chlorine Residual	µg/L	16	64	480	8.5	8.5	8.5
Acute Toxicity	TUa	NA	0.3	NA	--	0.88	--
Chronic Toxicity	TUc	NA	3	NA	--	4	--
Radioactivity	Not to exceed limits specified in title 17, division 1, chapter 5, subsection 4, group 3, article 1, section 30253 of the California Code of Regulations.						
Outfall 003							
Copper	µg/L	10	82	226	4.9	58.7	58.7
Zinc	µg/L	104	584	1544	6.2	74.2	74.2
Total Chlorine Residual	µg/L	16	64	480	6.8	82	82
Acute Toxicity	TUa	NA	0.3	NA	--	0.35	--
Chronic Toxicity	TUc	NA	3	NA	--	16	--
Radioactivity	Not to exceed limits specified in title 17, division 1, chapter 5, subsection 4, group 3, article 1, section 30253 of the California Code of Regulations.						
Outfall 004a							
Copper	µg/L	10	82	226	0.38	0.41	0.41
Zinc	µg/L	104	584	1544	1.56	3.32	3.32
Total Chlorine Residual	µg/L	16	64	480	10 DNQ	10 DNQ	10 DNQ
Acute Toxicity	TUa	NA	0.3	NA	--	--	--
Chronic Toxicity	TUc	NA	3	NA	--	--	--
Radioactivity	Not to exceed limits specified in title 17, division 1, chapter 5, subsection 4, group 3, article 1, section 30253 of the California Code of Regulations.						

Parameter	Units	Effluent Limitation			Monitoring Data (From 02/2005 – To 3/2015)		
		6-Month Median	Daily Maximum	Instantaneous Maximum	Highest Average 6-Month Median	Highest Average Daily Maximum	Highest Instantaneous Maximum
Outfall 004b							
Copper	µg/L	10	82	226	1.08	2.89	2.89
Zinc	µg/L	104	584	1544	10.8	12.3	12.3
Total Chlorine Residual	µg/L	16	64	480	20	90	90
Acute Toxicity	TUa	NA	0.3	NA	--	1	--
Chronic Toxicity	TUc	NA	3	NA	--	8	--
Radioactivity	Not to exceed limits specified in title 17, division 1, chapter 5, subsection 4, group 3, article 1, section 30253 of the California Code of Regulations.						

Table F-5. Historic Effluent Limitations and Monitoring Data for Human Health Carcinogens

Parameter	Units	Effluent Limitation	Monitoring Data (From 06/2005 – 3/2015)
		Monthly Average	Highest Monthly Average
Outfall 001			
DDT	µg/L	1.36E-3	ND
PAHs	µg/L	7.04E-2	0.0043
TCDD Equivalents	µg/L	3.12E-8	4.68E-7
Outfall 003			
DDT	µg/L	1.36E-3	ND
PAHs	µg/L	7.04E-2	0.2003
TCDD Equivalents	µg/L	3.12E-8	2.40E-7
Outfall 004a			
DDT	µg/L	1.36E-3	ND
PAHs	µg/L	7.04E-2	ND
TCDD Equivalents	µg/L	3.12E-8	6.13E-8
Outfall 004b			
DDT	µg/L	1.36E-3	ND
PAHs	µg/L	7.04E-2	1.11
TCDD Equivalents	µg/L	3.12E-8	7.33E-8

D. Compliance Summary

Review of the Facility's SMRs identified the following violations:

1. In March 2015:

a. A dry weather flow of municipal potable water to Outfall 001 was discovered on March 2, 2015. Discharger staff investigated and discovered a leak in the fire main supply to the Coastal Studies building on March 3, 2015. The leak filled up a vault next to the fire main and entered an empty pipeline that connected to the seawater return system, approximately 50 feet upstream from the monitoring vault for Outfall 001. The water to the fire main was shut off at 11:45 am on March 3, 2015, eliminating this dry weather flow to Outfall 001. The fire main was repaired and the empty pipeline was plugged to prevent a reoccurrence.

b. The effluent at Outfall 001 exceeded the daily maximum limitation of three TUc for chronic toxicity (for purple urchin fertilization) with a value of 8 TUc.

c. The effluent at Outfall 004b exceeded the daily maximum limitation of three TUc for chronic toxicity (for purple urchin fertilization) with a value of 4 TUc.

d. The effluent at Outfall 001 exceeded the 6-month median limitation of 16 µg/l for total chlorine residual with a value of 230 µg/l on July 9, 2012.

e. Residual chlorine was detected in the receiving water sample at a reported value of 12 ug/L which is above the Ocean Plan 6-month median water quality objective of 2 ug/L.

2. In April 2014:

Chronic toxicity (Species 2) six-month median limitation is three TUc and reported value was eight TUc at Outfall 004b.

3. In January 2013:

The Discharger did not monitor for flow during various days in the month.

4. In July 2012:

a. The effluent at Outfall 003 exceeded the daily maximum limitations of three TUc for chronic toxicity (for giant kelp growth) with a value of four TUc.

b. The effluent at Outfall 004b exceeded the 6-month median limitation of 16 µg/l for total chlorine residual with a value of 20 µg/l on July 9, 2012.

5. In April 2012:

The effluent at Outfall 001 exceeded the daily maximum limitations of three TUc for chronic toxicity (for purple urchin fertilization) with a value of four TUc.

6. In February 2012:

The effluent at Outfall 003 exceeded the daily maximum limitation of three TUc for chronic toxicity (for purple urchin fertilization) with a value of 16 TUc.

7. In February 2011:

The effluent at Outfall 001 exceeded the daily maximum limitation of three TUc for chronic toxicity (for purple urchin fertilization) with a value of four TUc.

8. In February 2009:

The effluent at Outfall 003 exceeded the daily maximum limitation of three TUc for chronic toxicity (for giant kelp germination and purple urchin fertilization) with a value of four TUc on February 7, 2009.

9. In September 2005:

a. The Discharger did not report all sediment data as mg/kg (dry weight) for the January - June 2005 semiannual report.

b. The Discharger did not include grain size or total organic carbon analyses in sediment reports for the January - June 2005 semiannual report.

c. The Discharger did not report daily flow rate from Outfall 002 for April 2005. The Discharger is required to report the daily flow rate from Outfall 002.

d. For the June 14, 2005 dry weather monitoring event, the Discharger analyzed composite samples at Outfalls 001 and 003 rather than the required grab samples

e. The Discharger did not collect at least five surf zone samples within every 30-day period. During July - September 2005, 70 days were out of compliance.

10. In June 2005:

The Discharger did not collect at least five surf zone samples within every 30-day period, as required in paragraph C.3.a of the MRP No. R9-2005-0008.

E. Planned Changes – Not Applicable

III. APPLICABLE PLANS, POLICIES, AND REGULATIONS

The requirements contained in this Order are based on the requirements and authorities described in this section.

A. Legal Authorities

This Order serves as WDRs pursuant to article 4, chapter 4, division 7 of the California Water Code (Water Code) (commencing with section 13260). This Order is also issued pursuant to section 402 of the federal Clean Water Act (CWA) and implementing regulations adopted by the U.S. Environmental Protection Agency (USEPA) and chapter 5.5, division 7 of the Water Code (commencing with section 13370). It shall serve as an NPDES permit for point source discharges from this Facility to surface waters.

B. California Environmental Quality Act (CEQA)

Under Water Code section 13389, this action to adopt an NPDES permit is exempt from the provisions of chapter 3 of CEQA, (commencing with section 21100) of division 13 of the Public Resources Code.

C. State and Federal Regulations, Policies, and Plans

1. **Water Quality Control Plans.** The California Regional Water Quality Control Board, San Diego Region (San Diego Water Board) adopted a Water Quality Control Plan for the San Diego Region (Basin Plan) on September 8, 1994 which was last amended on April 25, 2007. The Basin Plan was subsequently approved by the State Water Board on December 13, 1994. Subsequent revisions to the Basin Plan have also been adopted by the San Diego Water Board and approved by the State Water Board. The Basin Plan designates beneficial uses, establishes water quality objectives, and contains

implementation programs and policies to achieve those objectives for all waters addressed through the plan. In addition, the Basin Plan implements State Water Board Resolution No. 88-63, which established state policy that all waters, with certain exceptions, should be considered suitable or potentially suitable for municipal or domestic supply. Requirements in this Order implement the Basin Plan. Beneficial uses applicable to the Pacific Ocean are as follows:

Table F-6. Basin Plan Beneficial Uses

Discharge Point / Outfall Number	Receiving Water Name	Beneficial Use(s)
001, 002, 003, 004a, and 004b	Pacific Ocean	Industrial service supply; navigation; contact water recreation; non-contact water recreation; commercial and sport fishing; preservation of biological habitats of special significance; wildlife habitat; rare, threatened, or endangered species; marine habitat; aquaculture; migration of aquatic organisms; spawning, reproduction, and/or early development; and shellfish harvesting.

2. **California Ocean Plan.** The State Water Board adopted the Water Quality Control Plan for Ocean Waters of California, California Ocean Plan (Ocean Plan) in 1972 and amended it in 1978, 1983, 1988, 1990, 1997, 2000, 2005, 2009, and 2012. The State Water Board adopted the latest amendment on October 16, 2012 and it became effective on August 19, 2013. In order to protect the beneficial uses, the Ocean Plan establishes water quality objectives and a program of implementation. The Ocean Plan is applicable, in its entirety, to point source discharges to the ocean. The Ocean Plan identifies beneficial uses of ocean waters of the State to be protected as summarized below:

Table F-7. Basin Plan Beneficial Uses

Discharge Point / Outfall Number	Receiving Water Name	Beneficial Use
001, 002, 003, 004a, and 004b	Pacific Ocean	Industrial water supply; water contact and non-contact recreation, including aesthetic enjoyment; navigation; commercial and sport fishing; mariculture; preservation and enhancement of designated Areas of Special Biological Significance (ASBS); rare and endangered species; marine habitat; fish migration; fish spawning; and shellfish harvesting.

The Implementation Provisions of the Ocean Plan specify that waste shall not be discharged to areas designated as being of special biological significance. In addition, the Ocean Plan specifies that discharges shall be located a sufficient distance from such designated areas to assure maintenance of natural water quality conditions in these areas. The Facility's discharge is within the San Diego-Scripps ASBS. On July 22, 2004, the State Water Board issued Resolution No. 2004-0052[3], approving an exception from

[3] State Water Resources Control Board Resolution No. 2004–0052, *Approving An Exception To The California Ocean Plan (Ocean Plan) For The University Of California Scripps Institution Of Oceanography Discharge Into*

the Ocean Plan's prohibition of waste discharges into an ASBS to allow discharges of waste from the Facility into the San Diego-Scripps ASBS. This exception included a number of conditions that the Discharger has complied with. The exception shall expire at the end of the five-year term of Order No. R9-2005-0008 which incorporated the conditions in Resolution 2004-0052. On August 5, 2009, the Discharger requested a new exception without an expiration date. In response, the State Water Board staff prepared a draft resolution approving an exception to the Ocean Plan for the Facility's discharge and an addendum to the initial study/mitigated negative declaration (State Clearinghouse No. 2004051018). The Ocean Plan Exception and addendum to the initial study/mitigated negative declaration was approved by State Board on April 21, 2015.

The Ocean Plan Exception, directive 2.c requires the Discharger to comply with all other applicable provisions, including water quality standards of the Ocean Plan.

Requirements of this Order implement the Ocean Plan and incorporate the requirements in the Ocean Plan Exception.

3. **Antidegradation Policy.** Section 131.12 of 40 CFR requires that the state water quality standards include an antidegradation policy consistent with the federal policy. The State Water Board established California's antidegradation policy in State Water Board Resolution No. 68-16 ("*Statement of Policy with Respect to Maintaining High Quality of Waters in California*"). Resolution No. 68-16 is deemed to incorporate the federal antidegradation policy where the federal policy applies under federal law. Resolution No. 68-16 requires that existing water quality be maintained unless degradation is justified based on specific findings. The San Diego Water Board's Basin Plan implements, and incorporates by reference, both the State and federal antidegradation policies. This Order and the permitted discharge are consistent with the antidegradation provision of 40 CFR section 131.12 and State Water Board Resolution No. 68-16in section IV.D.3 of this Fact Sheet.

4. **Anti-Backsliding Requirements.** Sections 402(o)(2) and 303(d)(4) of the CWA and federal regulations at 40 CFR section 122.44(l) restrict backsliding in NPDES permits. These anti-backsliding provisions require that effluent limitations in a reissued permit must be as stringent as those in the previous permit, with some exceptions in which limitations may be relaxed. This Order is consistent with the anti-backsliding requirements in the CWA and federal regulations as explained in section IV.D.2 of this Fact Sheet.

5. **Endangered Species Act Requirements.** This Order does not authorize any act that results in the taking of a threatened or endangered species or any act that is now prohibited, or becomes prohibited in the future, under either the California Endangered Species Act (Fish and Game Code, sections 2050 to 2097) or the Federal Endangered Species Act (16 United States Code Annotated sections 1531 to 1544). This Order requires compliance with effluent limitations, receiving water limitations, and other requirements to protect the beneficial uses of waters of the state, including protecting rare and endangered species. The Discharger is responsible for meeting all requirements of the applicable Endangered Species Act.

D. Impaired Water Bodies on CWA 303(d) List

Under section 303(d) of the 1972 CWA, states, territories and authorized tribes are required to develop lists of water quality limited segments. The waters on these lists do not meet water

quality standards, even after point sources of pollution have installed the minimum required levels of pollution control technology.

On November 12, 2010, USEPA approved the list of impaired water bodies, prepared by the State Water Board pursuant to section 303(d) of the CWA, which are not expected to meet applicable water quality standards after implementation of technology-based effluent limitations for point sources. The 303(d) list for waters in the vicinity of the Facility's outfalls include 0.03 miles of Pacific Ocean shoreline at SIO Pier at La Jolla Shore Beach impaired by enterococcus, total coliform, and fecal coliform.

The San Diego Water Board plans to adopt Total Maximum Daily Loads (TMDLs) for pollutants on the 303(d) list. TMDLs establish wasteload allocations for point sources and load allocations for non-point sources, and are established to achieve the water quality standards for the impaired water bodies. An applicable TMDL has not been adopted for this discharge.

E. Other Plans, Polices and Regulations

Storm Water Management Plan. To carry out the requirements of Resolution No. 2004-0052 (directives Nos. 3.f, 3.g, 3.h, 3.i, and 3.j), Order No. R9-2005-0008 (section C.4.c, Reports and Studies) required the Discharger to review and revise its Storm Water Management Plan (SWMP) that describes the necessary measures to be taken by the Discharger to prohibit non-storm water urban runoff (i.e. any discharge of urban runoff to a storm drain that is not entirely composed of storm water), except those discharges associated with firefighting or other catastrophic events and the reduction of pollutants in storm water discharges.

The Discharger submitted a revised SWMP on August 2005. The Discharger trains its staff on an annual basis on storm water pollution prevision, including best management practices (BMPs) for dry weather flow prevention and elimination. The Discharger has installed treatment controls to prevent dry weather flows from reaching the San Diego-Scripps ASBS.

In December 2012, the Discharger enrolled in the Phase II Small Municipal Separate Storm Sewer Systems (MS4) General Permit, Order No. 2013-0001 DWQ (General MS4 Permit). The Discharger has developed a SWMP designed to reduce the discharge of pollutants "to the maximum extent possible" through public education and participation; elimination of illicit discharges (non-storm water runoff); construction site storm water runoff control; post-construction site storm water management; and pollution prevention for municipal operations. The source control BMPs that were developed to prevent dry weather flows from discharging into the ASBS and to reduce pollutant loadings into the ASBS during storm events are part of Discharger's SWMP.

The Phase II Permit includes water quality objectives pertaining to campus operations and all construction. In addition, post construction guidelines are required to maintain the quality of storm water emanating from all project sites after completion and occupancy. The Discharger's SWMP (including the source control BMPs and an inventory of the treatment controls that have been installed throughout campus to prevent storm water pollution) is summarized on their webpage: http://stormwater.ucsd.edu.

This Order acknowledges that the Discharger is enrolled under the Phase II MS4 General Permit for the Facility. This Order only includes the SWMP requirements from the Ocean Plan Exception (directives Nos. 5 through 8) as directed by State Water Board and are not duplicative of the Phase II MS4 General Permit.

IV. RATIONALE FOR EFFLUENT LIMITATIONS AND DISCHARGE SPECIFICATIONS

The CWA requires point source dischargers to control the amount of conventional, non-conventional, and toxic pollutants that are discharged into the waters of the United States. The control of pollutants discharged is established through effluent limitations and other requirements in NPDES permits. There are two principal bases for effluent limitations in the Code of Federal Regulations: 40 CFR section 122.44(a) requires that permits include applicable technology-based effluent limitations and standards; and 40 CFR section 122.44(d) requires that permits include water quality-based effluent limitations (WQBELs) to attain and maintain applicable numeric and narrative water quality criteria to protect the beneficial uses of the receiving water.

A. Discharge Prohibitions

1. **Discharge Prohibition A.** Discharges of wastes in a manner or to a location which have not been specifically authorized by this Order and for which valid waste discharge requirements are not in force are prohibited.

   This prohibition is retained from Order No. R9-2005-0008 and allows the Discharger to discharge waste only in accordance with the requirements of this Order or other valid waste discharge requirements. It is based on sections 301 and 402 of the CWA and section 13263 of the Water Code.

2. **Discharge Prohibition B.** The Discharger must comply with Waste Discharge Prohibitions contained in chapter 4 of the Basin Plan, incorporated into this Order as if fully set forth herein and summarized in Attachment G, as a condition of this Order.

   This prohibition is retained from Order No. R9-2005-0008 and is required by chapter 4 of the Basin Plan. The discharge prohibitions in the Basin Plan are applicable to any person, as defined by section 13050(c) of the Water Code, who is a citizen, domiciliary, or political agency or entity of California whose activities in California could affect the quality of waters of the state within the boundaries of the San Diego Region.

3. **Discharge Prohibition C.** The Discharger must comply with Discharge Prohibitions contained in the Ocean Plan, incorporated into this Order as if fully set forth herein and summarized in Attachment G, as a condition of this Order.

   This prohibition is required by the Ocean Plan which specifies that the plan is applicable in its entirety to point source discharges to the ocean.

4. **Discharge Prohibition D.** The discharge of industrial waste other than seawater that has been pumped from the Pacific Ocean and circulated through the Facility's aquaria as discussed in section II of the Fact Sheet is prohibited.

   This prohibition is retained from Order No R9-2005-0008. It is based on sections 301 and 402 of the federal clean water act and section 13263 of the Water Code.

5. **Discharge Prohibition E.** The dumping or deposition of oil, trash, or other industrial waste into the ocean or adjacent to the ocean in any manner that may permit it to be washed into the ocean is prohibited.

   This prohibition is retained from Order No R9-2005-0008. It is based on sections 301 and 402 of the CWA and section 13263 of the Water Code.

6. **Discharge Prohibition F.** The discharge of seawater in excess of 1.25 MGD from Outfall 001, 003, 004a, and 004b is prohibited unless the discharger obtains revised WDRs for the proposed increase in flow.

   This prohibition is retained from Order No. R9-2005-0008. This flow prohibition is based on the seawater intake capacity.

7. **Discharge Prohibition G.** Natural water quality conditions in the receiving water must not be altered as a result of the discharge from the Facility.

   This prohibition incorporates the Ocean Plan Exception, directive No. 2.b.

8. **Discharge Prohibition H.** Discharges of wastes to ASBS not covered by an Ocean Plan exception are prohibited.

   This prohibition incorporates the Ocean Plan Exception, directive No. 2.d, which states, "*Only seawater system waste discharge and storm water discharges by the applicant are covered by this Resolution. All other waste discharges to ASBS are prohibited, unless they are covered by a separate, applicable Ocean Plan exception.*"

9. **Discharge Prohibition I.** The discharge of copper additives is prohibited.

   This prohibition incorporates the Ocean Plan Exception, Appendix A, condition 2.

10. **Discharge Prohibition J.** All discharges of non-storm water urban runoff (i.e., any discharge of urban runoff to a storm drain that is not composed entirely of storm water), except those associated with emergency firefighting, are prohibited.

    This prohibition incorporates the Ocean Plan Exception, Appendix A, condition 4.

B. Technology-Based Effluent Limitations

Technology-based effluent limitations (TBELs) aim to prevent pollution by requiring a minimum level of effluent quality that is attainable using demonstrated technologies for reducing discharges of pollutants or pollution into the waters of the United States. TBELs are developed independently of the potential impact of a discharge on the receiving water, which is addressed through water quality standards and water quality-based effluent limitations (WQBELs).

1. Scope and Authority

Section 301(b) of the CWA and implementing USEPA permit regulations at 40 CFR section 122.44 require that permits include conditions meeting applicable technology-based requirements at a minimum, and any more stringent effluent limitations necessary to meet applicable water quality standards. The discharge authorized by this Order must meet minimum federal technology-based requirements based on Best Professional Judgment (BPJ) in accordance with 40 CFR section 125.3.

The CWA requires that technology-based effluent limitations are established based on several levels of controls:

a. Best practicable treatment control technology (BPT) represents the average of the best performance by facilities within an industrial category or subcategory. BPT standards apply to toxic, conventional, and non-conventional pollutants.

b. Best available technology economically achievable (BAT) represents the best existing performance of treatment technologies that are economically achievable within an industrial point source category. BAT standards apply to toxic and non-conventional pollutants.

c. Best conventional pollutant control technology (BCT) represents the control from existing industrial point sources of conventional pollutants including biochemical oxygen demand, total suspended solids (TSS), fecal coliform, pH, and oil and grease. The BCT standard is established after considering a two-part reasonableness test. The first test compares the relationship between the costs of attaining a reduction in effluent discharge and the resulting benefits. The second test examines the cost and level of reduction of pollutants from the discharge from publicly owned treatment works to the cost and level of reduction of such pollutants from a class or category of industrial sources. Effluent limitations must be reasonable under both tests.

d. New source performance standards (NSPS) represent the best available demonstrated control technology standards. The intent of NSPS guidelines is to set limitations that represent state-of-the-art treatment technology for new sources.

The CWA requires USEPA to develop effluent limitation guidelines (ELGs) representing application of BPT, BAT, BCT, and NSPS. Section 402(a)(1) of the CWA and 40 CFR section 125.3 authorize the use of BPJ to derive TBELs on a case-by-case basis where ELGs are not available for certain industrial categories and/or pollutants of concern. Where BPJ is used, the San Diego Water Board must consider specific factors outlined in 40 CFR section 125.3.

2. Applicable TBELs

The Ocean Plan establishes water quality objectives, general requirements for management of waste discharged to the ocean, effluent quality requirements for waste discharges, discharge prohibitions, and general provisions. Further, Table 2 of the Ocean Plan establishes TBELs for Publicly-Owned Treatment Works and industrial discharges for which ELGs have not been established pursuant to sections 301, 302, or 306 of the CWA. ELGs have not been established for aquaria facilities and thus Order No. R9-2005-0008 established TBELs based on Table 2 of the Ocean Plan. These TBELs are carried over to this Order are summarized in Tables F-8 through F-11 below.

40 CFR section 122.45(f)(1) requires effluent limitations be expressed in terms of mass, with some exceptions, and 40 CFR section 122.45(f)(2) allows pollutants that are limited in terms of mass to additionally be limited in terms of other units of measurement. Thus, this Order adds effluent limitations expressed in terms of mass, in addition to concentration. Mass-based effluent limitations are calculated using the following equation:

lbs/day = permitted flow (MGD) x pollutant concentration (mg/L) x 8.34

Table F-8. Summary of Technology-based Effluent Limitations

Parameter	Units	Effluent Limitations[1]		
		Average Monthly	Average Weekly	Instantaneous Maximum
Oil and Grease	mg/l	25	40	75
	lbs/day	261	417	782
Total Suspended Solids (TSS)	mg/l	60	--	120
	lbs/day	626	--	1251
Settleable Solids	ml/l	1.0	1.5	3.0
Turbidity	NTU	75	100	225
pH	Units	Within 6.0 to 9.0 at all times		

1. Mass-based effluent limitations are based on the flow prohibition of 1.25 MGD (section III.F of this Order): Parameter Concentration (mg/L) x Flow Limit (MGD) x 8.34 (conversion factor) = Mass-based Performance Goal expressed as lbs/day. The mass-based effluent limitations apply to the total mass emission rate from Outfall 001, 003, 004a, and 004b: measured concentration-Outfall 001 (mg/L) x measured flow-Outfall 001 (MGD) + measured concentration-Outfall 003 (mg/L) x estimated/measured flow-Outfall 003 (MGD) + measured concentration-Outfall 004a (mg/L) x estimated/measured flow-Outfall 004a (mg/L) (MGD) + measured concentration-Outfall 004b x estimated/measured flow-Outfall 004b (MGD) x 8.34 (conversion factor) = calculated mass-based emission rate (lbs/day).

C. Water Quality-Based Effluent Limitations (WQBELs)

1. Scope and Authority

CWA section 301(b) and 40 CFR section 122.44(d) require that permits include limitations more stringent than applicable federal technology-based requirements where necessary to achieve applicable water quality standards.

Section 122.44(d)(1)(i) of 40 CFR requires that permits include effluent limitations for all pollutants that are or may be discharged at levels that have the reasonable potential to cause or contribute to an exceedance of a water quality standard, including numeric and narrative objectives within a standard. Where reasonable potential has been established for a pollutant, but there is no numeric criterion or objective for the pollutant, WQBELs must be established using: (1) USEPA criteria guidance under CWA section 304(a), supplemented where necessary by other relevant information; (2) an indicator parameter for the pollutant of concern; or (3) a calculated numeric water quality criterion, such as a proposed state criterion or policy interpreting the state's narrative criterion, supplemented with other relevant information, as provided in 40 CFR section 122.44(d)(1)(vi).

The process for determining reasonable potential and calculating WQBELs when necessary is intended to protect the designated uses of the receiving water as specified in the Basin Plan, and achieve applicable water quality objectives and criteria that are contained in other state plans and policies, or any applicable water quality criteria contained in the Ocean Plan.

2. Applicable Beneficial Uses and Water Quality Criteria and Objectives

The Basin Plan and Ocean Plan designate beneficial uses, establish water quality objectives, and contain implementation programs and policies to achieve those objectives for all waters.

a. **Basin Plan.** The beneficial uses specified in the Basin Plan applicable to the Pacific Ocean are summarized in section III.C.1 of this Fact Sheet.

The Basin Plan water quality objective for dissolved oxygen applicable to ocean waters is stated as follows: "The dissolved oxygen concentration in ocean waters shall not at any time be depressed more than 10 percent from that which occurs naturally, as the result of the discharge of oxygen demanding waste materials".

The Basin Plan water quality objectives for pH applicable to the receiving water is stated as follows: "The pH value shall not be changed at any time more than 0.2 pH units from that which occurs naturally."

The Basin Plan states, "The terms and conditions of the State Board's 'Water Quality Control Plan for Ocean Waters of California' (Ocean Plan), 'Water Quality Control Plan for Control of Temperature in the Coastal and Interstate Waters and Enclosed Bays and Estuaries of California' (Thermal Plan), and any revisions thereto are incorporated into this Basin Plan by reference. The terms and conditions of the Ocean Plan and Thermal Plan apply to the ocean waters within this Region."

b. **Ocean Plan.** The beneficial uses specified in the Ocean Plan for the Pacific Ocean are summarized in section III.C.2 of this Fact Sheet. The Ocean Plan also includes water quality objectives for the ocean receiving water for bacterial characteristics, physical characteristics, chemical characteristics, biological characteristics, and radioactivity.

Table 1 of the Ocean Plan includes the following water quality objectives for toxic pollutants and whole effluent toxicity:

i. 6-month median, daily maximum, and instantaneous maximum objectives for 21 chemicals and chemical characteristics, including total chlorine residual and chronic toxicity, for the protection of marine aquatic life;

ii. 30-day average objectives for 20 non-carcinogenic chemicals for the protection of human health;

iii. 30-day average objectives for 42 carcinogenic chemicals for the protection of human health; and

iv. Daily maximum objectives for acute and chronic toxicity.

3. Determining the Need for WQBELs

The need for an effluent limitation based on water quality objectives in Table 1 of the Ocean Plan was evaluated in accordance with 40 CFR section 122.44(d) and guidance for statistically determining the "reasonable potential" for a discharged pollutant to exceed an objective, as outlined in the *Technical Support Document for Water Quality-based Toxics Control* (TSD: EPA/505/2-90-001, 1991) and the Ocean Plan Reasonable Potential Analysis (RPA) Amendment that was adopted by the State Water Board on October 16, 2012. The statistical approach combines knowledge of effluent variability (as estimated by a coefficient of variation), with the uncertainty due to a limited amount of effluent data, to estimate a maximum effluent value at a high level of confidence. This estimated maximum effluent value is based on a lognormal distribution of daily effluent values.

Projected receiving water values (based on the estimated maximum effluent value or the reported maximum effluent value and minimum probably initial dilution) can then be compared to the appropriate objective to determine potential for an exceedance of that objective and the need for an effluent limitation. According to the Ocean Plan amendment, the RPA can yield three endpoints:

Endpoint 1, an effluent limitation is required and monitoring is required;

Endpoint 2, an effluent limitation is not required and the San Diego Water Board may require monitoring; and

Endpoint 3, the RPA is inconclusive, monitoring is required, and an existing effluent limitation may be retained or a permit reopener clause may be included to allow inclusion of an effluent limitation if future monitoring warrants the inclusion.

Endpoint 3 is typically the result when there are fewer than 16 data points and all are censored data (i.e., below quantitation or method detection levels for an analytical procedure).

The implementation provisions for Table 1 in section III.C of the Ocean Plan specify that the minimum initial dilution is the lowest average initial dilution within any single month of the year. Dilution estimates are to be based on observed waste flow characteristics, observed receiving water density structure, and the assumption that no currents, of sufficient strength to influence the initial dilution process, flow across the discharge structure. Before establishing a dilution credit for a discharge, it must first be determined if, and how much, receiving water is available to dilute the discharge.

Order No. R9-2008-0005 allowed an initial dilution factor of 2:1. On February 9, 2007, the Discharger submitted the results of a dilution study to the San Diego Water Board. The dilution and dispersion of effluent from the five permitted outfalls (Outfalls 001, 002, 003, 004a, and 004b) at the Facility into the San Diego-Scripps ASBS were studied using the SEDXPORT hydrodynamic modeling system. The model is designed to numerically simulate dry weather and wet weather case scenarios. The dilution study incorporated historical data on water mass properties (salinity, temperature), tides, and waves (water elevation, wave height and direction) that have been collected from SIO pier since 1980.

The dilution and dispersion study results indicate dilution factors greater than 17:1 occur 95% of the time. The minimum dilution ratio observed was 7:1. Based on the Discharger's dilution study, Resolution R9-2008-0139[4] established effluent limitations for discharges of (1) seawater system discharges and (2) seawater system discharges mixed with storm water using the 7:1 initial dilution factor.

Conventional pollutants were not considered as part of the RPA. TBELs for conventional pollutants are included in this Order as described in section IV.B of this Fact Sheet.

Effluent data provided in the Discharger's ROWD and in the Discharger's SMRs were used in the RPA. A minimum probable initial dilution of seven to one was considered in this evaluation. A summary of the RPA is in Attachment H of this Order.

Reasonable potential to cause or contribute to an exceedance of water quality objectives contained within the Ocean Plan (endpoint 1) was determined for the seawater discharges from Outfalls 001, 003, 004a, and 004b as follows:

- Outfall 001 – copper, bis(2-ethylhexyl)phthalate, and TCDD equivalents
- Outfall 003 –copper, lead, chronic toxicity, total chlorine residual, PAH, and TCDD equivalents
- Outfall 004a - TCDD Equivalents
- Outfall 004b – hexavalent chromium, total chlorine residual, and TCDD Equivalents

[4] Resolution No. R9-2008-0139, Amending Order No. R9-2005-0008, NPDES No. CA0107239, Waste Discharge Requirements, University of California Scripps Institution of Oceanography, San Diego County, adopted on November 12, 2008.

Effluent limitations and monitoring requirements have been established for the parameters listed above, except for total chlorine residual. New information for total chlorine residual monitoring has been provided to the San Diego Water Board by the Natural Water Quality Committee (Committee) in a technical report titled "*Summation of Findings, Natural Water Quality Committee, 2006-2009*"[5] (Report). The Committee notes that it is difficult to accurately quantify the amounts of total chlorine residual or free chlorine in marine systems due to matrix interference introduced by naturally occurring salts of iodide and bromide. According to the Committee, the methods used to measure the concentration of total chlorine residual are not specific to that element. Rather, they measure the total concentration of oxidizing agents in the solution. Consequently, the oxidized bromine, iodine, and bromamine compounds would register as total chlorine residual, even though they are something completely different. The Facility does not use chlorine in its seawater discharge to the ocean; however, nearly every sample of seawater discharge to the ocean exceeded permit limitations. The Report concludes that it is reasonable to assume that the exceedances are a result of false positives. Based on the finding of the Report, the San Diego Water Board determined that the monitoring data for total chlorine residual is not representative information to characterize the discharge. For more information, see section IV.D.2 of this Fact Sheet.

For parameters for which Endpoint 3 was concluded, reasonable potential was inconclusive. For parameters for which Endpoint 3 was concluded and previous effluent limitations had not been established, performance goals have been included. For parameters for which new data is available and reasonable potential cannot be determined, effluent limitations have been retained. The MRP in Attachment E of this Order is intended to facilitate collection of additional information for these constituents to determine if reasonable potential exists in future permit reissuances and/or updates. Endpoint 3 was determined for the seawater discharges from Outfalls 001, 003, 004a, and 004b and effluent limitations have been retained as follows, except for total chlorine residual, for the same reason noted in the above paragraph, and total acute toxicity, for the reasons noted in section IV.C.5 of this Fact Sheet:

- Outfall 001 – DDT
- Outfall 003 – DDT
- Outfall 004a – total chlorine residual, acute and chronic toxicity, DDT, and PAHs
- Outfall 004b – DDT and PAHs

Consistent with 40 CFR 122.44(l)(2)(i)(B), effluent limitations from Order No. R9-2005-0008 will not be retained for constituents for which the RPA results indicated Endpoint 2. Instead, performance goals have been assigned for these constituents. Parameters for which Endpoint 2 was concluded are determined not to have reasonable potential, thus it is inappropriate to establish effluent limitations for these parameters. Endpoint 2 was determined for the seawater discharges from Outfalls 001, 003, 004a, and 004b and effluent limitations have been replaced by performance goals as follows:

[5] A copy of the report can be found at www.swrcb.ca.gov/water_issues/programs/ocean/docs/asbs/asbsnwqc/625_nwqc_smmry.pdf

- Outfall 001 –zinc, total chlorine residual, acute and chronic toxicity, and PAHs
- Outfall 003 –zinc and acute toxicity
- Outfall 004a – copper and zinc
- Outfall 004b – copper, zinc, and acute and chronic toxicity

4. WQBEL Calculations

a. From the Table 1 water quality objectives of the Ocean Plan, effluent limitations and performance goals are calculated according to the following equation for all pollutants, except for acute toxicity (if applicable) and radioactivity:

Ce = Co + Dm (Co – Cs) where

Ce = the effluent limitation (ug/l)

Co = the water quality objective to be met at the completion of initial dilution (ug/l)

Cs = background seawater concentration

Dm = minimum probable initial dilution expressed as parts seawater per part wastewater

b. As discussed in section IV.C.3 above, the minimum initial dilution of 7:1 from the amended Order No. R9-2005-0008 was used for the initial dilution (Dm) for Outfalls 001, 002, 003, 004a, and 004b.

c. Table 3 of the Ocean Plan establishes background concentrations for some pollutants to be used when determining reasonable potential (represented as "Cs"). In accordance with Table 1 implementing procedures, Cs equals zero for all pollutants not established in Table 3. The background concentrations provided in Table 3 are summarized below:

Table F-9. Background Seawater Concentrations (Cs), Table 3 of the Ocean Plan

Pollutant	Background Seawater Concentration (µg/l)
Arsenic	3
Copper	2
Mercury	0.0005
Silver	0.16
Zinc	8

d. As an example of how effluent limitations and performance goals have been calculated, the effluent limitation for copper was calculated as follows:

Table F-10. Water Quality Objectives for Copper (Co), Table 1 of the Ocean Plan

Parameter	Units	6-Month Median	Daily Maximum	Instantaneous Maximum
Copper	µg/l	3	12	30

Copper

Ce = 3 + 7 (3 – 2) = 10 µg/l (6-Month Median)

Ce = 12 + 7 (12 - 2) = 82 µg/l (Daily Maximum)

Ce = 30 + 7 (30 – 2) = 226 µg/l (Instantaneous Maximum)

e. 40 CFR section 122.45(f)(1) requires effluent limitations to be expressed in terms of mass, with some exceptions, and 40 CFR section 122.45(f)(2) allows pollutants that are limited in terms of mass to additionally be limited in terms of other units of measurement. Thus, this Order adds effluent limitations expressed in terms of mass, in addition to concentration. In addition, pursuant to the exceptions for mass limitations provided in 40 CFR section 122.45(f)(1), some effluent limitations are not expressed in terms of mass, such as pH and temperature, and when the applicable standards are expressed in terms of concentration (e.g., CTR criteria and Maximum Contaminant Levels or MCLs) and mass limitations are not necessary to protect the beneficial uses of the receiving water. Mass-based effluent limitations were calculated using the following equation:

lbs/day = permitted flow (MGD) x pollutant concentration (mg/L) x 8.34

Table F-11. Summary of Water Quality-based Effluent Limitations[1]

Parameter	Units	Effluent Limitations[2,3]			
		6-Month Median	Daily Maximum	Instantaneous Maximum	Average Monthly
Protection of Marine Aquatic Life					
Chromium (Hexavalent), Total Recoverable (effluent limitations for Outfall 004b only)	µg/l	16	64	160	--
	lbs/day	1.7E-01	6.7E-01	1.7E+00	--
Copper, Total Recoverable (effluent limitations for Outfalls 001 and 003 only)	µg/l	1.0E+01	8.2E+01	2.26E+02	--
	lbs/day	1.0E-01	8.5E-01	2.4E+00	--
Lead, Total Recoverable (effluent limitations for Outfall 003 only)	µg/l	1.6 E+01	6.4 E+01	1.60 E+02	--
	lbs/day	1.7E-01	6.7E-01	1.7E+00	--
Chronic Toxicity[4] (effluent limitations for Outfalls 003 and 004a only)	Pass/Fail, % Effect (Test of Significant Toxicity	--	Pass or % effect < 50[5]	--	Pass[6]
Protection of Human Health - Carcinogens					
Bis(2-ethylhexyl) phthalate (effluent limitations for Outfall 001 only)	µg/l	--	--	--	2.8E+01
	lbs/day	--	--	--	2.9E-01
DDT (effluent limitations for Outfalls 001, 003, 004a, and 004b)	µg/l				1.36E-03
	lbs/day				1.4E-02
PAHs (effluent limitations for Outfalls 003, 004a, and 004b only)	µg/l	--	--	--	7.04E-02
	lbs/day	--	--	--	7.3E-04

Parameter	Units	Effluent Limitations[2,3]			
		6-Month Median	Daily Maximum	Instantaneous Maximum	Average Monthly
TCDD Equivalents (effluent limitations for Outfalls 001, 003, 004a, and 004b)	µg/l	--	--	--	3.12E-08
	lbs/day	--	--	--	3.3E-10

1 See Attachment A for definitions of abbreviations and a glossary of common terms used in this Order.

2 Mass-based effluent limitations are based on the flow prohibition of 1.25 MGD (section III.F of this Order): Parameter Concentration (mg/L) x Flow Limit (MGD) x 8.34 (conversion factor) = Mass-based Performance Goal expressed as lbs/day. The mass-based effluent limitations apply to the total mass emission rate from Outfall 001, 003, 004a, and 004b: measured concentration-Outfall 001 (mg/L) x measured flow-Outfall 001 (MGD) + measured concentration-Outfall 003 (mg/L) x estimated/measured flow-Outfall 003 (MGD) + measured concentration-Outfall 004a (mg/L) x estimated/measured flow-Outfall 004a (mg/L) (MGD) + measured concentration-Outfall 004b x estimated/measured flow-Outfall 004b (MGD) x 8.34 (conversion factor) = calculated mass-based emission rate (lbs/day).

3 Scientific "E" notation is used to express certain values. In scientific "E" notation, the number following the "E" indicates that position of the decimal point in the value. Negative numbers after the "E" indicate that the value is less than 1, and positive numbers after the "E" indicate that the value is greater than 1. In this notation a value of 6.1E-02 represents 6.1×10^{-2} or 0.061, 6.1E+02 represents 6.1×10^{2} or 610, and 6.1E+00 represents 6.1×10^{0} or 6.1.

4 A numeric WQBEL is established because effluent data showed that there was reasonable potential for the effluent to cause or contribute to an exceedance of the chronic toxicity water quality objective. The chronic toxicity final effluent limitation is protective of both the numeric acute toxicity and the narrative toxicity Basin Plan water quality objectives. These final effluent limitations will be implemented using the *Short Term Methods for Estimating the Chronic Toxicity of Effluents and Receiving Waters to Freshwater Organisms* (USEPA 2002, EPA-821-R-02-013), current USEPA guidance in *National Pollutant Discharge Elimination System Test of Significant Toxicity Implementation Document* (EPA 833-R-10-003, June /2010) and USEPA Regions 8, 9 and 10 Toxicity Training Tool (January 2010), http://www2.epa.gov/region8/epa-regions-8-9-and-10-toxicity-training-tool-january-2010.

5 As specified in section VII.J of this Order and section III.C of the MRP, Attachment E of this Order.

6 The Median Monthly Effluent Limitation for chronic toxicity shall only apply when there is a discharge more than one day in a calendar month period. During such calendar months, up to three independent toxicity tests may be conducted when one toxicity test results in "Fail".

5. Whole Effluent Toxicity (WET)

Provisions at section III.C of the Ocean Plan require chronic toxicity monitoring for ocean waste discharges with minimum initial dilution factors below 100. Using semiannual acute and chronic WET testing data conducted between May 2007 and December 2014, the RPA resulted in Endpoint 1, and an effluent limitation for toxicity is required.

WET testing protects receiving waters from the aggregate toxic effect of a mixture of pollutants in the effluent. An acute toxicity test is conducted over a short time period and measures mortality. A chronic toxicity test is conducted over a short or a longer period of time and may measure mortality, reproduction, and growth. A chemical at a low concentration could have chronic effects but no acute effects until the chemical was at a higher concentration. It is possible that toxic constituents could be present in the Facility effluent, or could have synergistic or additive effects.

The application of chronic toxicity monitoring and effluent limitations is more desirable than acute toxicity because chronic toxicity is more conservative and provides a better indicator of chronic effects to organisms in the receiving water, other than percent survival. Chronic effects, such as detrimental physiological responses (affecting fertilization, growth, reproduction) may be present, even when acute effects such as the death of an organism are not apparent.

Because chronic toxicity is considered to be a more conservative indicator of toxicity, and the monitoring of all sample locations for both acute and chronic toxicity is costly and

redundant, the monitoring requirements and effluent limitations for acute toxicity have been removed based on the application of the more conservative chronic toxicity requirements. If the Discharger complies with effluent limitations for chronic toxicity, the Discharger will achieve water quality greater than that necessary to achieve compliance with acute toxicity effluent limitations.

D. Final Effluent Limitations

1. Applicable TBELs and WQBELs described in sections IV.B and IV.C have been applied in this Order for Outfalls 001, 003, 004a, and 004b and are summarized in Tables F-8 through F-11 and F-14.

Applicable discharge specifications that have been carried over from Order No. R9-2005-0008 are listed below.

a. Effluent shall not contain substances that float or become floatable upon discharge.

b. Effluent shall not contain settleable material or substances that may form sediments which will degrade benthic communities or other aquatic life.

c. Effluent shall not contain substances that will accumulate to toxic levels in marine waters, sediments, or biota.

d. Effluent shall not contain substances that significantly decrease the natural light to benthic communities and other marine life.

e. Effluent shall not contain materials that result in aesthetically undesirable discoloration of the ocean surface.

The following discharge specification incorporates the Ocean Plan Exception, Appendix A, condition 2.

f. The Discharger must minimize concentrations of chemical additives, including antibiotics, in the effluent to prevent the alteration of natural water quality conditions in the receiving water.

2. Satisfaction of Anti-Backsliding Requirements

Sections 402(o)(2) and 303(d)(4) of the CWA and federal regulations at 40 CFR section 122.44(l) prohibit backsliding in NPDES permits. These anti-backsliding provisions require effluent limitations in a reissued permit to be as stringent as those in the previous permit, with some exceptions where limitations may be relaxed. The effluent limitations in this Order are at least as stringent as the effluent limitations in Order No. R9-2005-0008, with the exception of the total chlorine residual and parameters with a reasonable potential endpoint of 2. The changes to the effluent limitations for total chlorine residual and parameters with a reasonable potential endpoint of 2 are consistent with federal anti-backsliding requirements for the reasons stated below:

The effluent limitation for total chlorine residual is less stringent than that in Order No. R9-2005-0008. This relaxation of effluent limitations is consistent with the anti-backsliding requirements of the CWA and federal regulations which allows for less stringent effluent limitations if information is available which was not available at the time of the permit issuance which would have justified the application of less stringent effluent limitations at the time of the permit issuance.

New information for total chlorine residual monitoring has been provided to the San Diego Water Board by the Natural Water Quality Committee (Committee) in a technical

report titled "*Summation of Findings, Natural Water Quality Committee, 2006-2009*"[6] (report). The Committee was created by the State Water Board, as part of the Ocean Plan exception adopted in July 2004, to evaluate the Facility's data and advise the San Diego Water Board regarding the impacts associated with the Facility's discharges.

With regards to total chlorine residual, the reports notes that it is difficult to accurately quantify the amounts of total chlorine residual or free chlorine in marine systems due to matrix interference introduced by naturally occurring salts of iodide and bromide. According to the Committee, the methods used to measure the concentration of total chlorine residual are not specific to that element. Rather, they measure the total concentration of oxidizing agents in the solution. Consequently, the oxidized bromine, iodine, and bromamine compounds would register as total chlorine residual, even though they are something completely different. The Facility does not use chlorine in its seawater discharge to the ocean; however, nearly every sample of seawater discharge to the ocean exceeded permit limitations. The report concludes that it is reasonable to assume that the exceedances are a result of false positives.

The effluent limitations for parameters with a reasonable potential endpoint of 2 have been removed and, instead, performance goals have been assigned for these parameters. This relaxation of water quality effluent limitations are governed by section 402(o)(2) of the CWA. Section 402(o)(2)(B)(i) allows the relaxation of an effluent limitation when new information becomes available that would have justified the application of a less stringent standard. Since Order No. R9-2005-0008 was amended, new monitoring data indicates that the discharge does not have reasonable potential to cause or contribute to an exceedance of WQOs for some of the Ocean Plan Table 1 parameters that previously had effluent limitations; thus the removal of effluent limitations for these parameters is consistent with the anti-backsliding requirements of the CWA and federal regulations.

3. Satisfaction of Antidegradation Policy

WDRs for the Discharger must conform with federal and State antidegradation policies provided at 40 CFR section 131.12 and in State Water Board Resolution No. 68-16, Statement of Policy with Respect to Maintaining High Quality of Waters in California. The antidegradation policies require that beneficial uses and the water quality necessary to maintain those beneficial uses in the receiving water of the discharge shall be maintained and protected, and, if existing water quality is better than the quality required to maintain beneficial uses, the existing water quality shall be maintained and protected unless allowing a lowering of water quality is necessary to accommodate important economic and social development or consistent with maximum benefit to the people of California. When a significant lowering of water quality is allowed by the San Diego Water Board, an antidegradation analysis is required in accordance with the State Water Board's Administrative Procedures Update (July 2, 1990), Antidegradation Policy Implementation for NPDES Permitting.

Changes in this Order are not expected to result in a lowering of water quality of the receiving water. The requirements of this Order are consistent with federal and state antidegradation requirements for the following reasons:

As explained in section IV.D.2 of this Fact Sheet, this Order removes effluent limitations for total chlorine residual. Due to the difficulty of accurately quantifying the amounts of total chlorine residual or free chlorine in marine systems due to matrix interference and

[6] A copy of the report can be found at www.swrcb.ca.gov/water_issues/programs/ocean/docs/asbs/asbsnwqc/625_nwqc_smmry.pdf

the fact that the Facility does not use chlorine in its seawater discharge to the ocean, the technical report by the Committee concludes that it is reasonable to assume that the effluent limitation exceedances for total chlorine residual are a result of false positives. Given this information, this change is not expected to affect the quality of the discharge or to degrade the receiving water. The discharge was found to have no reasonable potential for total chlorine residual to contribute to an exceedance. Additionally, performance goals for total chlorine residual were included in this Order to signal where impacts may be significant. Thus, the removal of these effluent limitations is consistent with federal and state antidegradation policy and a complete anti-degradation analysis is not required.

This Order removes effluent limitations for the parameters that do not have a reasonable potential to cause or contribute to an exceedance of water quality objectives (WQOs) as discussed above. This change is not expected to affect the quality of the discharge or to degrade the receiving water. The discharge was found to have no reasonable potential for these parameters to contribute to an exceedance. Performance goals for these parameters were included in this Order to signal where impacts may be significant. Thus, the removal of these effluent limitations is consistent with federal and state antidegradation policy and a complete anti-degradation analysis is not required.

4. Stringency of Requirements for Individual Pollutants

This Order contains both TBELs and WQBELs for individual pollutants. The TBELs consist of restrictions on grease and oil, TSS, settleable solids, turbidity, and pH and were derived from the Ocean Plan, as discussed in section IV.B of this Fact Sheet. This Order's TBELs implement the minimum, applicable federal technology-based requirements. These limitations are not more stringent than required by the CWA.

WQBELs have been derived to implement WQOs that protect beneficial uses. Both the beneficial uses and the WQOs have been approved pursuant to federal law and are the applicable federal water quality standards. To the extent that WQBELs were derived from the Ocean Plan, the Ocean Plan is the applicable standard pursuant to 40 CFR section 131.38. The procedures for calculating the individual WQBELs for priority pollutants are based on the Ocean Plan. Most beneficial uses and WQOs contained in the Ocean Plan were approved under state law and submitted to and approved by USEPA prior to May 30, 2000. Any WQOs and beneficial uses submitted to USEPA prior to May 30, 2000, but not approved by USEPA before that date, are nonetheless "applicable water quality standards for purposes of the CWA" pursuant to 40 CFR section 131.21(c)(1). The remaining WQOs and beneficial uses implemented by this Order were approved by USEPA and are applicable water quality standards pursuant to section 131.21(c)(2). Collectively, this Order's restrictions on individual pollutants are no more stringent than required to implement the requirements of the CWA.

E. Interim Effluent Limitations – Not Applicable

F. Performance Goals

Constituents that do not have reasonable potential to cause or contribute to an exceedance of WQOs have been assigned performance goals. Performance goals serve to maintain existing treatment levels and effluent quality; and performance goals support state and federal antidegradation policies. Additionally, performance goals provide all interested parties with information regarding the expected level of pollutants in the discharge that should not be exceeded in order to maintain the WQOs established in the Basin Plan and Ocean Plan. Performance goals are not limitations or standards for the regulation of the discharge. Effluent concentrations above the performance goals will not be considered as violations of the permit but serve as indicators that the effluent may be causing or contributing to a water quality exceedance. Repeated exceedances of performance goals may prompt the San Diego Water Board to reopen and amend the permit to replace performance goals for constituents of concern with effluent limitations, or the San Diego Water Board may coordinate such actions with the next permit renewal.

Order No. R9-2005-0008 established narrative effluent limitation triggers for Outfall 002. When the triggers were exceeded, the Discharger was required to review and revise its SWMP as needed to reduce the parameter(s) that exceeded the triggers. This Order carries over the performance goals for Outfall 002. This Order also incorporates the requirements from the Ocean Plan Exception, Appendix A, condition 13, if performance goals are exceeded at Outfall 002.

The performance goals for Outfalls 001, 002, 003, 004a, and 004b are included as Table 10 of this Order.

G. Land Discharge Specifications – Not Applicable

H. Reclamation Specifications – Not Applicable

V. RATIONALE FOR RECEIVING WATER LIMITATIONS

Receiving water limitations of this Order are derived from the water quality objectives for ocean waters established by the Basin Plan, Ocean Plan, and incorporate the Ocean Plan Exception, Appendix A, condition 1.

Prior to 2009, the San Diego Water Board interpreted the Bacterial Characteristics Water-contact Standards of the Ocean Plan (Receiving Water Limitations section V.A.1) to apply only in the zone bounded by the shoreline and a distance 1,000 feet from the shoreline or the 30-foot depth contour, whichever is further from the shoreline, and within kelp beds. The Ocean Plan provides that these Bacteriological Standards also apply in designated areas outside this zone used for water contact sports, as determined by the Regional Water Boards (i.e., all waters designated with the REC-1 beneficial use). These designated areas must be specifically defined in the Basin Plan. Because the San Diego Water Board has designated the ocean waters with the REC-1 beneficial use in the Basin Plan, the Ocean Plan Bacterial Standards apply throughout State of California territorial marine waters in the San Diego Region, which extend from surface to bottom, out to three nautical miles from the shoreline. This interpretation has been confirmed by the USEPA.

VI. RATIONALE FOR PROVISIONS

A. Standard Provisions

Standard Provisions, which apply to all NPDES permits in accordance with 40 CFR section 122.41, and additional conditions applicable to specified categories of permits in accordance with 40 CFR section 122.42, are provided in Attachment D to this Order. The discharger must comply with all standard provisions and with those additional conditions that are applicable under 40 CFR section 122.42.

Sections 122.41(a)(1) and (b) through (n) of 40 CFR establish conditions that apply to all state-issued NPDES permits. These conditions must be incorporated into the permits either expressly or by reference. If incorporated by reference, a specific citation to the regulations must be included in the Order. Section 123.25(a)(12) of 40 CFR allows the state to omit or modify conditions to impose more stringent requirements. In accordance with 40 CFR section 123.25, this Order omits federal conditions that address enforcement authority specified in 40 CFR sections 122.41(j)(5) and (k)(2) because the enforcement authority under the Water Code is more stringent. In lieu of these conditions, this Order incorporates by reference Water Code section 13387(e).

B. Special Provisions

1. Reopener Provisions

This Order may be re-opened and modified, revoked and reissued, or terminated in accordance with the provisions of 40 CFR parts 122, 123, 124, and 125. The San Diego Water Board may reopen the permit to modify permit conditions and requirements. Causes for modifications include the promulgation of new regulations, modification in sludge use or disposal practices, or adoption of new regulations by the State Water Board or the San Diego Water Board, including revisions to the Basin Plan.

2. Special Studies and Additional Monitoring Requirements

SIO Building D. SIO Building D is part of the former Southwest Marine Fisheries building that still remains. The building is not currently occupied. The Discharger plans to use the SIO Building D in 2016 or 2017, but have not yet identified the potential building occupants, the type of research that will be done there, or the type of seawater discharge. If any chemicals will be used in the SIO Building D, the seawater will be discharged to the sanitary sewer. If NIS will be used, an NIS treatment system will be installed. To ensure that chemicals and NIS are not discharged to the surface waters, the Discharger shall notify the San Diego Water Board at least 90 days prior to discharge from the SIO Building D to Outfall 001 with details of the seawater discharge category (or categories), chemical additive(s), and treatment systems.

3. Best Management Practices and Pollution Prevention

The requirements for best management practices (BMPs) is authorized by CWA sections 304(e) and 402(p), for toxic pollutants and hazardous substances, and for the control of storm water discharges.

a. **Storm Water Management Plan.**

This requirement to submit a revised SWMP incorporates the requirements of the Ocean Plan Exception, Appendix A, conditions 5, 6, 7, and 8 and the requirements of the Phase II Small Municipal Separate Storm Sewer Systems (MS4) General Permit, Order No. 2013-0001 DWQ.

b. **Non-indigenous Species**

This Order incorporates the requirements in the Ocean Plan Exception, Appendix A, condition 14 to control the release of exotic species to the receiving water.

4. Construction, Operation, and Maintenance Specifications – Not Applicable

5. Special Provisions for Municipal Facilities (Publicly-Owned Treatment Works Only) – Not Applicable

6. Other Special Provisions – Not Applicable

7. Compliance Schedules – Not Applicable

VII. RATIONALE FOR MONITORING AND REPORTING REQUIREMENTS

CWA section 308 and 40 CFR sections 122.41(h), (j)-(l), 122.44(i), and 122.48 require that all NPDES permits specify requirements for recording and reporting monitoring results. Water Code sections 13267 and 13383 authorize the San Diego Water Board to establish requirements for monitoring, inspection, entry, reporting, and recordkeeping. The MRP, Attachment E of this Order, establishes requirements for monitoring, reporting, and recordkeeping to implement federal and state requirements. The following provides the rationale for the monitoring and reporting requirements contained in the MRP for this Facility.

A. Core Monitoring Requirements

1. Influent Monitoring – Not Applicable

2. Effluent Monitoring

Effluent monitoring is the collection and analysis of samples or measurements of effluents, after all treatment processes, to determine and quantify contaminants and to demonstrate compliance with applicable effluent limitations, standards, and other requirements of this Order.

Effluent monitoring is necessary to address the following questions:

(1) Does the effluent comply with permit effluent limitations, performance goals, and other requirements of this Order, thereby ensuring that water quality standards are achieved in the receiving water?

(2) What is the mass of constituents that are discharged daily, monthly, or annually?

(3) Is the effluent concentration or mass changing over time?

(4) Is the Facility being properly operated and maintained to ensure compliance with the conditions of the Order?

To carry out the requirements of Resolution No. 2004-0052 (directive No. 3.r), MRP No. R9-2005-0008 (section B.2, Bacteria Monitoring) required the Discharger to monitor Outfall 003 for fecal coliform, total coliform, and enterococcus. The monitoring frequency is twice per year if there are not mammals in the Ring Tank and once per month if there are mammals in the Ring Tank. The monthly requirement is not carried over to this Order because the Ring Tank (marine mammal holding facility) was closed in 2004.

Effluent flow monitoring has been carried over to this Order to determine the volume of effluent being discharged from the Facility into the ASBS.

To incorporate the requirements of the Ocean Plan Exception, Appendix A, condition 10, this Order requires two samples collected from Outfall 001, 002, 003, 004a, and 004b and analyzed for all Ocean Plan Table 1 constituents, during the first year of the permit cycle, once during dry weather and once during wet weather. For wet weather samples, the effluent samples must also be analyzed for Ocean Plan indicator bacteria (total coliform, fecal coliform, and enterococcus). After the first year of the permit cycle, the monitoring frequency may be reduced to once per year, unless notified otherwise by the San Diego Water Board.

For Outfalls 001, 003, 004a, and 004b, semiannual monitoring for conventional pollutants, bacteria, and Ocean Plan Table 1 parameters that require an effluent limitation as listed in Table F-11 of this Fact Sheet has been carried over from the

original Order No. R9-2005-0008 (prior to the amendment that modified some of the frequencies to once per five years), with the exception of copper.

For Outfall 001, monthly copper monitoring was required in Order No. R9-2005-0008. The Discharger has changed the Facility such that the seawater that contains copper is now discharged to the sanitary sewer instead of to Outfall 001. Because of this, the monitoring frequency for copper has been reduced from monthly to semiannually for Outfall 001 in the Order.

3. Whole Effluent Toxicity Testing Requirements

Whole effluent toxicity refers to the overall aggregate toxic effect of an effluent measured directly by an aquatic toxicity test(s). WET tests evaluate the 1) aggregate toxic effects of all chemicals in the effluent including additive, synergistic, or antagonistic toxicity effects; 2) the toxicity effects of unmeasured chemicals in the effluent; and 3) variability in bioavailability of the chemicals in the effluent.

Monitoring to assess the overall toxicity of the effluent is required to answer the following questions:

(1) Does the effluent comply with permit effluent limitations for chronic toxicity thereby ensuring that water quality standards are achieved in the receiving water?

(2) If the effluent does not comply with permit effluent limitations for chronic toxicity, are unmeasured pollutants causing risk to aquatic life?

(3) If the effluent does not comply with permit effluent limitations for chronic toxicity, are pollutants in combinations causing risk to aquatic life?

Based on methods of the Ocean Plan, an effluent limitation has been established in this Order. To incorporate the requirements of the Ocean Plan Exception, Appendix A, condition 10, semiannual monitoring for WET has been carried over from Order No. R9-2005-0008 to this Order. Appendix III of the Ocean Plan states: “For discharges between 0.1 and 10 MGD, the monitoring frequency for acute and/or chronic toxicity of the effluent shall be at least annually.”

WET test measures the degree of response of exposed aquatic test organisms to an effluent. These tests assess the overall toxicity of the effluent, including the toxicity of unmeasured constituents and/or synergistic effects of multiple constituents. There are two types of WET tests: acute and chronic. An acute toxicity test is conducted over a shorter time period and measures mortality. A chronic toxicity test is conducted over a shorter period of time and may measure mortality, reproduction, and growth.

The application of chronic toxicity monitoring and effluent limitations is more desirable than acute toxicity because chronic toxicity is move conservative and provides a better indicator of chronic effects to organisms in the receiving water, other than percent survival. Chronic effects, such as detrimental physiological responses (affecting fertilization, growth, reproduction) may be present, even when acute effects such as the death of an organism are not apparent.

Because chronic toxicity is considered to be a more conservative indicator of toxicity, and the monitoring of all sample locations for both acute and chronic toxicity is costly and redundant, the monitoring requirements and effluent limitations for acute toxicity have been removed based on the application of the more conservative chronic toxicity requirements. If the Discharger complies with effluent limitations for chronic toxicity, the Discharger will achieve water quality greater than that necessary to achieve compliance with acute toxicity effluent limitations.

B. Receiving Water Monitoring

The receiving water and benthic monitoring requirements set forth below are designed to measure the effects of the Facility's discharge on the receiving ocean waters and incorporate the requirements of the Ocean Plan Exception, Appendix A, conditions 9, 11, and 12. The overall receiving water monitoring program is intended to answer the following questions:

(1) Does the receiving water meet water quality standards?

(2) Are the receiving water conditions getting better or worse over time?

(3) Does the effluent cause or contribute to an exceedance of the water quality standards in the receiving water?

(4) Are densities of bacteria in water contact areas below levels protective of public health?

C. Regional Monitoring Requirements

Regional monitoring provides information necessary to make assessments over large areas and serves to evaluate cumulative effects of all anthropogenic inputs. Regional monitoring data also assists in the interpretation of core monitoring studies. In accordance with the Ocean Plan, the San Diego Water Board may, at its discretion, allow relief from aspects of core monitoring in order to encourage participation by the Discharger in regional monitoring efforts. In accordance with the Ocean Plan Exception, Appendix A, conditions 9 and 12, the Deputy Director of the State Water Board Division of Water Quality may, at its discretion, allow relief from aspects of receiving water monitoring in order to meet the requirements in the Ocean Plan Exception, condition 9 and 11.

D. Other Monitoring Requirements

To incorporate the requirements of the Ocean Plan Exception, Appendix A, condition 3, this Order requires the Discharger to log all chemical additives discharged via the seawater system to the ocean and submit the log on a quarterly basis.

VIII. PUBLIC PARTICIPATION

The San Diego Water Board considered the issuance of WDRs that will serve as an NPDES permit for the Facility. As a step in the WDR adoption process, the San Diego Water Board developed tentative WDRs and encouraged public participation in the WDR adoption process.

A. Notification of Interested Parties

The San Diego Water Board notified the Discharger and interested agencies and persons of its intent to prescribe WDRs for the discharge and provided an opportunity to submit written comments and recommendations. Notification was provided through the San Diego Union Tribune newspaper and the San Diego Water Board's website.

B. Written Comments

Interested persons were invited to submit written comments concerning tentative WDRs as provided through the notification process. Comments were due either in person or by mail to the Executive Office at the San Diego Water Board at 2375 Northside Drive, Suite 100, San Diego, CA 92108.

To be fully responded to by staff and considered by the San Diego Water Board, the written comments were due at the San Diego Water Board office by 5:00 p.m. on October 12, 2015.

C. Public Hearing

The San Diego Water Board held a public hearing on the tentative WDRs during its regular Board meeting on the following date and time and at the following location:

Date: November 18, 2015
Time: 9:00 AM
Location: Regional Water Quality Control Board
Regional Board Meeting Room
2375 Northside Drive, Suite 100, San Diego, CA 92108

Interested persons were invited to attend. At the public hearing, the San Diego Water Board heard testimony pertinent to the discharge, WDRs, and permit. For accuracy of the record, important testimony was requested in writing.

D. Appeal of Waste Discharge Requirements

Any person aggrieved by this action of the San Diego Water Board may petition the State Water Board to review the action in accordance with Water Code section 13320 and California Code of Regulations, title 23, sections 2050. The State Water Board must receive the petition by 5:00 p.m. 30 calendar days after the San Diego Water Board's action at the following address:

State Water Resources Control Board
Office of Chief Counsel
P.O. Box 100, 1001 I Street
Sacramento, CA 95812-0100

Copies of the law and regulations applicable to filing petitions may be found at the following website: http://www.waterboards.ca.gov/public_notices/petitions/water_quality.

E. Information and Copying

The ROWD, other supporting documents, and comments received are on file and may be inspected at the San Diego Water Board, 2375 Northside Drive, Suite 100, San Diego, CA 92108 at any time between 8:30 a.m. and 4:45 p.m., Monday through Friday. Copying of documents may be arranged through the San Diego Water Board by calling 619-516-1990.

F. Register of Interested Persons

Any person interested in being placed on the mailing list for information regarding the WDRs and NPDES permit should contact the San Diego Water Board, reference this Facility, and provide a name, address, and phone number.

G. Additional Information

Requests for additional information or questions regarding this Order should be directed to Joann Lim at 619-521-3362 or Joann.Lim@waterboards.ca.gov or at 2375 Northside Drive, Suite 100, San Diego, CA 92108.

ATTACHMENT G – OCEAN PLAN AND BASIN PLAN PROHIBITIONS

I. Ocean Plan Discharge Prohibitions

1. The Discharge of any radiological chemical, or biological warfare agent or high-level radioactive waste into the ocean is prohibited.

2. Waste shall not be discharged to designated Areas of Special Biological Significance except as provided in chapter III.E of the Ocean Plan.

3. Pipeline discharge of sludge to the ocean is prohibited by federal law; the discharge of municipal and industrial waste sludge directly to the ocean, or into a waste stream that discharges to the ocean, is prohibited. The discharge of sludge digester supernatant directly to the ocean, or to a waste stream that discharges to the ocean without further treatment, is prohibited.

4. The by-passing of untreated wastes containing concentrations of pollutants in excess of those of Table 2 or Table 1 of the Ocean Plan is prohibited.

II. Basin Plan Discharge Prohibitions[1]

1. The discharge of waste to waters of the State in a manner causing, or threatening to cause a condition of pollution, contamination or nuisance as defined in Water Code section 13050, is prohibited.

2. The discharge of waste to land, except as authorized by WDRs or the terms described in Water Code section 13264 is prohibited.

3. The discharge of pollutants or dredged or fill material to waters of the United States except as authorized by an NPDES permit or a dredged or fill material permit (subject to the exemption described in Water Code section 13376) is prohibited.

4. Discharges of recycled water to lakes or reservoirs used for municipal water supply or to inland surface water tributaries thereto are prohibited, unless this San Diego Water Board issues an NPDES permit authorizing such a discharge; the proposed discharge has been approved by the State of California Department of Public Health and the operating agency of the impacted reservoir; and the discharger has an approved fail-safe long-term disposal alternative.

5. The discharge of waste to inland surface waters, except in cases where the quality of the discharge complies with applicable receiving water quality objectives, is prohibited. Allowances for dilution may be made at the discretion of the San Diego Water Board. Consideration would include streamflow data, the degree of treatment provided and safety measures to ensure reliability of facility performance. As an example, discharge of secondary effluent would probably be permitted if streamflow provided 100:1 dilution capability.

6. The discharge of waste in a manner causing flow, ponding, or surfacing on lands not owned or under the control of the discharger is prohibited, unless the discharge is authorized by the San Diego Water Board.

[1] Where the Basin Plan prohibitions refer specifically to discharges to waters of the state, the prohibitions.

7. The dumping, deposition, or discharge of waste directly into waters of the State, or adjacent to such waters in any manner which may permit its being transported into the waters, is prohibited unless authorized by the San Diego Water Board.

8. Any discharge to a storm water conveyance system that is not composed entirely of storm water is prohibited unless authorized by the San Diego Water Board. [The federal regulations, 40 CFR section 122.26(b)(13), define storm water as storm water runoff, snow melt runoff, and surface runoff and drainage. 40 CFR section 122.26(b)(2) defines an illicit discharge as any discharge to a storm water conveyance system that is not composed entirely of storm water except discharges pursuant to an NPDES permit and discharges resulting from firefighting activities.] [section 122.26 amended at 56 FR 56553, November 5, 1991; 57 FR 11412, April 2, 1992].

9. The unauthorized discharge of treated or untreated sewage to waters of the State or to a storm water conveyance system is prohibited.

10. The discharge of industrial wastes to conventional septic tank/ subsurface disposal systems, except as authorized by the terms described in Water Code section 13264, is prohibited.

11. The discharge of radioactive wastes amenable to alternative methods of disposal into the waters of the State is prohibited.

12. The discharge of any radiological, chemical, or biological warfare agent into waters of the State is prohibited.

13. The discharge of waste into a natural or excavated site below historic water levels is prohibited unless the discharge is authorized by the San Diego Water Board.

14. The discharge of sand, silt, clay, or other earthen materials from any activity, including land grading and construction, in quantities which cause deleterious bottom deposits, turbidity or discoloration in waters of the State or which unreasonably affect, or threaten to affect, beneficial uses of such waters is prohibited.

ATTACHMENT H – REASONABLE POTENTIAL ANALYSIS RESULTS SUMMARY

Table H-1 RPA Results Summary – Outfall 001

Parameter	Units	n[1]	MEC[2]	Most Stringent Criteria	Background	RPA Endpoint[3]
Arsenic	µg/l	8	2.19	8[4]	3[5]	2
Cadmium	µg/l	8	.034	1[4]	0	2
Hexavalent Chromium	µg/l	8	.455	2[4]	0	2
Copper	µg/l	118	10.4	3[4]	2[5]	1
Lead	µg/l	8	.439	2[4]	0	2
Mercury	µg/l	8	.01	0.04[4]	0.0005[5]	2
Nickel	µg/l	8	.608	5[4]	0	2
Selenium	µg/l	8	0.30	15[4]	0	2
Silver	µg/l	8	<.005	0.7[4]	0.16[5]	3
Zinc	µg/l	19	10	20[4]	8[5]	2
Cyanide	µg/l	8	2	1[4]	0	3
Total Chlorine Residual	µg/l	19	8	2[4]	0	2
Ammonia-N	µg/l	19	50	600[4]	0	2
Acute Toxicity	Tua	14	0.88	0.3	0	2
Chronic Toxicity	Tu_c	60	4	1[6]	0	2
Phenolic compounds (non-chlorinated)	µg/l	8	<0.1	30[4]	0	3
Chlorinated phenolics	µg/l	8	<0.1	1[4]	0	3
Endosulfan	µg/l	8	<0.001	0.009[4]	0	3
Endrin	µg/l	8	<0.001	0.002[4]	0	3
HCH	µg/l	8	<0.001	0.004[4]	0	3
Radioactivity	µg/l	-	-	[7]	0	-
Acrolein	µg/l	8	<2.2	220[8]	0	3
Antimony	µg/l	8	0.22	1,200[8]	0	2
Bis(2-chloroethoxy)methane	µg/l	8	<0.05	4.4[8]	0	3
Bis(2-chloroisopropyl)ether	µg/l	8	<0.05	1,200[8]	0	3
Chlorobenzene	µg/l	8	<0.21	570[8]	0	3
Chromium III	µg/l	8	.455	190,000[8]	0	2
di-n-butyl phthalate	µg/l	8	.195	3,500[8]	0	2
Dichlorobenzenes	µg/l	8	<0.01	5,100[8]	0	3
Diethyl phthalate	µg/l	8	.105	33,000[8]	0	2
Dimethyl phthalate	µg/l	8	1.2	820,000[8]	0	2
4,6-Dinitro-2-methylphenol	µg/l	8	<0.1	220[8]	0	3
2,4-Dinitrophenol	µg/l	8	<0.1	4.0[8]	0	3
Ethylbenzene	µg/l	8	<0.17	4,100[8]	0	3
Fluoranthene	µg/l	8	.022	15[8]	0	3
Hexachlorocyclopentadiene	µg/l	8	<0.05	58[8]	0	3
Nitrobenzene	µg/l	8	<0.05	4.9[8]	0	3
Thallium	µg/l	8	0.011	2[8]	0	2
Toluene	µg/l	8	<0.22	85,000[8]	0	3

Parameter	Units	n[1]	MEC[2]	Most Stringent Criteria	Background	RPA Endpoint[3]
Tributyltin	µg/l	9	<0.001	0.0014[8]	0	3
1,1,1-Trichloroethane	µg/l	8	<0.32	540,000[8]	0	3
Acrylonitrile	µg/l	19	<0.27	0.10[8]	0	3
Aldrin	µg/l	19	<0.001	0.000022[8]	0	3
Benzene	µg/l	8	0.64	5.9[8]	0	3
Benzidine	µg/l	19	<0.05	0.000069[8]	0	3
Beryllium	µg/l	8	<.005	0.033[8]	0	3
Bis(2-chloroethyl)ether	µg/l	8	<0.05	0.045[8]	0	3
Bis(2-ethylhexyl)phthalate	µg/l	8	2.32	3.5[8]	0	1
Carbon tetrachloride	µg/l	8	<0.33	0.90[8]	0	3
Chlordane	µg/l	19	<0.001	0.000023[8]	0	3
Chlorodibromomethane	µg/l	7	<0.45	8.6[8]	0	3
Chloroform	µg/l	8	<0.22	130[8]	0	3
DDT	µg/l	19	<0.001	0.00017[8]	0	3
1,4-Dichlorobenzene	µg/l	7	<0.01	18[8]	0	3
3-3'-Dichlorobenzidine	µg/l	13	<0.05	0.0081[8]	0	3
1,2-Dichloroethane	µg/l	8	<0.22	28[8]	0	3
1,1-Dichloroethylene	µg/l	8	<0.31	0.9[8]	0	3
Dichlorobromomethane	µg/l	8	<0.27	6.2[8]	0	3
Dichloromethane	µg/l	7	<2.6	450[8]	0	3
1,3-Dichloropropene	µg/l	8	<0.3	8.9[8]	0	3
Dieldrin	µg/l	19	<0.001	0.00004[8]	0	3
2,4-Dinitrotoluene	µg/l	8	<0.05	2.6[8]	0	3
1,2-Diphenylhydrazine	µg/l	7	<0.005	0.16[8]	0	3
Halomethanes	µg/l	8	<0.47	130[8]	0	3
Heptachlor	µg/l	19	<0.001	0.00005[8]	0	3
Heptachlor epoxide	µg/l	19	<0.001	0.00002[8]	0	3
Hexachlorobenzene	µg/l	8	<0.001	0.00021[8]	0	3
Hexachlorobutadine	µg/l	8	<0.05	14[8]	0	3
Hexachloroethane	µg/l	8	<0.05	2.5[8]	0	3
Isophorone	µg/l	8	<.05	730[8]	0	3
N-Nitrosodimethylamine	µg/l	8	<0.05	7.3[8]	0	3
N-Nitrosodi-n-propylamine	µg/l	8	<0.05	0.38[8]	0	3
N-Nitrosodiphenylamine	µg/l	8	<0.05	2.5[8]	0	3
PAH	µg/l	19	.01	0.0088[8]	0	2
PCB	µg/l	19	<0.001	0.000019[8]	0	3
TCDD Equivalents	µg/l	16	9.51E-07	3.9E-9[8]	0	1
1,1,2,2-Tetrachloroethane	µg/l	8	<0.18	2.3[8]	0	3
Tetrachloroethylene	µg/l	8	<0.18	2.0[8]	0	3
Toxaphene	µg/l	19	<0.00104	0.00021[8]	0	3
Trichloroethylene	µg/l	8	<0.3	27[8]	0	3
1,1,2-Trichloroethane	µg/l	8	<0.25	9.4[8]	0	3
2,4,6-Trichlorophenol	µg/l	8	<0.05	0.29[8]	0	3

Parameter	Units	n[1]	MEC[2]	Most Stringent Criteria	Background	RPA Endpoint[3]
Vinyl Chloride	µg/l	8	<0.33	36[8]	0	3

1 Number of data points available for the RPA.
2 If there is a detected value, the highest reported value is summarized in the table. If there are no detected values, the lowest MDL is summarized in the table.
3 End Point 1 – RP determined, limit required, monitoring required.
End Point 2 – Discharger determined not to have RP, monitoring may be established.
End Point 3 – RPA was inconclusive, carry over previous limits if applicable, and establish monitoring.
4 Based on the 6-Month Median in the Table 1 of the Ocean Plan.
5 Background concentrations contained in Table 3 of the Ocean Plan.
6 Based on the Daily Maximum in Table 1 of the Ocean Plan.
7 Not to exceed limits specified in title 17, division 1, chapter 5, subchapter 4, group 3, article 3, section 30253 of the California Code of Regulations. Radioactivity at levels that exceed the applicable criteria are not expected in the discharge.
8 Based on 30-Day Average in Table 1 of the Ocean Plan.

Table H-2 RPA Results Summary – Outfall 003

Parameter	Units	n[1]	MEC[2]	Most Stringent Criteria	Background	RPA Endpoint[3]
Arsenic	µg/l	7	2.24	8[4]	3[5]	2
Cadmium	µg/l	7	.115	1[4]	0	2
Hexavalent Chromium	µg/l	7	3.15	2[4]	0	2
Copper	µg/l	17	63	3[4]	2[5]	1
Lead	µg/l	7	1.18	2[4]	0	1
Mercury	µg/l	7	.0014	0.04[4]	0.0005[5]	3
Nickel	µg/l	7	3.029	5[4]	0	2
Selenium	µg/l	7	.27	15[4]	0	2
Silver	µg/l	7	<.005	0.7[4]	0.16[5]	3
Zinc	µg/l	15	74.171	20[4]	8[5]	2
Cyanide	µg/l	7	<.48	1[4]	0	3
Total Chlorine Residual	µg/l	15	82	2[4]	0	1
Ammonia-N	µg/l	15	50	600[4]	0	2
Acute Toxicity	Tua	10	.35	0.3	0	2
Chronic Toxicity	Tu_c	38	16	1[6]	0	1
Phenolic compounds (non-chlorinated)	µg/l	7	<.1	30[4]	0	3
Chlorinated phenolics	µg/l	7	<.1	1[4]	0	3
Endosulfan	µg/l	7	<.001	0.009[4]	0	3
Endrin	µg/l	7	<.001	0.002[4]	0	3
HCH	µg/l	7	<.001	0.004[4]	0	3
Radioactivity	µg/l	-	-	[7]	0	-
Acrolein	µg/l	7	<2.2	220[8]	0	3
Antimony	µg/l	7	.189	1,200[8]	0	2
Bis(2-chloroethoxy)methane	µg/l	7	<.05	4.4[8]	0	3
Bis(2-chloroisopropyl)ether	µg/l	7	<.05	1,200[8]	0	3
Chlorobenzene	µg/l	7	<.21	570[8]	0	3
Chromium III	µg/l	7	3.15	190,000[8]	0	2
di-n-butyl phthalate	µg/l	7	.0808	3,500[8]	0	2
Dichlorobenzenes	µg/l	7	<.33	5,100[8]	0	3

Parameter	Units	n[1]	MEC[2]	Most Stringent Criteria	Background	RPA Endpoint[3]
Diethyl phthalate	µg/l	7	.101	33,000[8]	0	2
Dimethyl phthalate	µg/l	7	.197	820,000[8]	0	2
4,6-Dinitro-2-methylphenol	µg/l	7	<.1	220[8]	0	3
2,4-Dinitrophenol	µg/l	7	<.1	4.0[8]	0	3
Ethylbenzene	µg/l	7	<.17	4,100[8]	0	3
Fluoranthene	µg/l	7	<.001	15[8]	0	3
Hexachlorocyclopentadiene	µg/l	7	<.05	58[8]	0	3
Nitrobenzene	µg/l	7	<.05	4.9[8]	0	3
Thallium	µg/l	7	.012	2[8]	0	2
Toluene	µg/l	7	<.22	85,000[8]	0	3
Tributyltin	µg/l	7	<.001	0.0014[8]	0	3
1,1,1-Trichloroethane	µg/l	7	<.32	540,000[8]	0	3
Acrylonitrile	µg/l	15	<.27	0.10[8]	0	3
Aldrin	µg/l	14	<.001	0.000022[8]	0	3
Benzene	µg/l	7	<.23	5.9[8]	0	3
Benzidine	µg/l	14	<.05	0.000069[8]	0	3
Beryllium	µg/l	7	<.005	0.033[8]	0	3
Bis(2-chloroethyl)ether	µg/l	7	<.05	0.045[8]	0	3
Bis(2-ethylhexyl)phthalate	µg/l	7	.382	3.5[8]	0	2
Carbon tetrachloride	µg/l	7	<.33	0.90[8]	0	3
Chlordane	µg/l	14	<.001	0.000023[8]	0	3
Chlorodibromomethane	µg/l	7	<.38	8.6[8]	0	3
Chloroform	µg/l	7	<.22	130[8]	0	3
DDT	µg/l	14	<.001	0.00017[8]	0	3
1,4-Dichlorobenzene	µg/l	7	<.001	18[8]	0	3
3-3'-Dichlorobenzidine	µg/l	11	<.05	0.0081[8]	0	3
1,2-Dichloroethane	µg/l	7	<.22	28[8]	0	3
1,1-Dichloroethylene	µg/l	7	<.31	0.9[8]	0	3
Dichlorobromomethane	µg/l	7	<.27	6.2[8]	0	3
Dichloromethane	µg/l	7	<.25	450[8]	0	3
1,3-Dichloropropene	µg/l	7	<.3	8.9[8]	0	3
Dieldrin	µg/l	14	<.001	0.00004[8]	0	3
2,4-Dinitrotoluene	µg/l	7	<.05	2.6[8]	0	3
1,2-Diphenylhydrazine	µg/l	7	<.005	0.16[8]	0	3
Halomethanes	µg/l	7	<.47	130[8]	0	3
Heptachlor	µg/l	14	<.001	0.00005[8]	0	3
Heptachlor epoxide	µg/l	14	<.001	0.00002[8]	0	3
Hexachlorobenzene	µg/l	7	<.001	0.00021[8]	0	3
Hexachlorobutadine	µg/l	7	<.05	14[8]	0	3
Hexachloroethane	µg/l	7	<.05	2.5[8]	0	3
Isophorone	µg/l	7	<.05	730[8]	0	3
N-Nitrosodimethylamine	µg/l	7	<.05	7.3[8]	0	3
N-Nitrosodi-n-propylamine	µg/l	7	<.05	0.38[8]	0	3

Parameter	Units	n[1]	MEC[2]	Most Stringent Criteria	Background	RPA Endpoint[3]
N-Nitrosodiphenylamine	µg/l	7	<.05	2.5[8]	0	3
PAH	µg/l	14	.2003	0.0088[8]	0	1
PCB	µg/l	14	<.001	0.000019[8]	0	3
TCDD Equivalents	µg/l	13	4.43E-06	3.9E-9[8]	0	1
1,1,2,2-Tetrachloroethane	µg/l	7	<.18	2.3[8]	0	3
Tetrachloroethylene	µg/l	7	<.27	2.0[8]	0	3
Toxaphene	µg/l	14	<.01	0.00021[8]	0	3
Trichloroethylene	µg/l	7	<.3	27[8]	0	3
1,1,2-Trichloroethane	µg/l	7	<.25	9.4[8]	0	3
2,4,6-Trichlorophenol	µg/l	7	<.05	0.29[8]	0	3
Vinyl Chloride	µg/l	7	<.33	36[8]	0	3

1 Number of data points available for the RPA.
2 If there is a detected value, the highest reported value is summarized in the table. If there are no detected values, the lowest MDL is summarized in the table.
3 End Point 1 – RP determined, limit required, monitoring required.
End Point 2 – Discharger determined not to have RP, monitoring may be established.
End Point 3 – RPA was inconclusive, carry over previous limits if applicable, and establish monitoring.
4 Based on the 6-Month Median in the Table 1 of the Ocean Plan.
5 Background concentrations contained in Table 3 of the Ocean Plan.
6 Based on the Daily Maximum in Table 1 of the Ocean Plan.
7 Not to exceed limits specified in title 17, division 1, chapter 5, subchapter 4, group 3, article 3, section 30253 of the California Code of Regulations. Radioactivity at levels that exceed the applicable criteria are not expected in the discharge.
8 Based on 30-Day Average in Table 1 of the Ocean Plan.

Table H-3 RPA Results Summary – Outfall 004a

Parameter	Units	n[1]	MEC[2]	Most Stringent Criteria	Background	RPA Endpoint[3]
Arsenic	µg/l	5	2.93	8[4]	3[5]	2
Cadmium	µg/l	5	0.03	1[4]	0	2
Hexavalent Chromium	µg/l	5	0.73	2[4]	0	2
Copper	µg/l	5	1.81	3[4]	2[5]	2
Lead	µg/l	5	0.031	2[4]	0	2
Mercury	µg/l	5	<0.0008	0.04[4]	0.0005[5]	3
Nickel	µg/l	5	0.387	5[4]	0	2
Selenium	µg/l	5	<0.01	15[4]	0	3
Silver	µg/l	5	0.023	0.7[4]	0.16[5]	3
Zinc	µg/l	5	3.32	20[4]	8[5]	2
Cyanide	µg/l	5	<1	1[4]	0	3
Total Chlorine Residual	µg/l	5	<7	2[4]	0	3
Ammonia-N	µg/l	5	290	600[4]	0	3
Acute Toxicity	Tua	0	-	0.3	0	3
Chronic Toxicity	Tu_c	0	-	1[6]	0	3
Phenolic compounds (non-chlorinated)	µg/l	0	-	30[4]	0	3
Chlorinated phenolics	µg/l	4	<0.1	1[4]	0	3
Endosulfan	µg/l	1	<0.001	0.009[4]	0	3

Parameter	Units	n[1]	MEC[2]	Most Stringent Criteria	Background	RPA Endpoint[3]
Endrin	µg/l	5	<0.001	0.002[4]	0	3
HCH	µg/l	5	<0.001	0.004[4]	0	3
Radioactivity	µg/l	-	-	[7]	0	-
Acrolein	µg/l	5	<4.3	220[8]	0	3
Antimony	µg/l	5	0.123	1,200[8]	0	2
Bis(2-chloroethoxy)methane	µg/l	5	<0.05	4.4[8]	0	3
Bis(2-chloroisopropyl)ether	µg/l	5	<0.05	1,200[8]	0	3
Chlorobenzene	µg/l	5	<0.36	570[8]	0	3
Chromium III	µg/l	5	0.73	190,000[8]	0	2
di-n-butyl phthalate	µg/l	5	0.0937	3,500[8]	0	2
Dichlorobenzenes	µg/l	5	<0.38	5,100[8]	0	3
Diethyl phthalate	µg/l	5	0.0837	33,000[8]	0	2
Dimethyl phthalate	µg/l	5	0.179	820,000[8]	0	3
4,6-Dinitro-2-methylphenol	µg/l	5	<0.1	220[8]	0	3
2,4-Dinitrophenol	µg/l	5	<0.1	4.0[8]	0	3
Ethylbenzene	µg/l	5	<0.17	4,100[8]	0	3
Fluoranthene	µg/l	5	<0.001	15[8]	0	3
Hexachlorocyclopentadiene	µg/l	5	<0.05	58[8]	0	3
Nitrobenzene	µg/l	5	<0.05	4.9[8]	0	3
Thallium	µg/l	5	0.005	2[8]	0	3
Toluene	µg/l	5	<0.35	85,000[8]	0	3
Tributyltin	µg/l	5	<0.001	0.0014[8]	0	3
1,1,1-Trichloroethane	µg/l	5	<0.32	540,000[8]	0	3
Acrylonitrile	µg/l	5	<3.6	0.10[8]	0	3
Aldrin	µg/l	5	<0.001	0.000022[8]	0	3
Benzene	µg/l	5	<0.26	5.9[8]	0	3
Benzidine	µg/l	5	<0.05	0.000069[8]	0	3
Beryllium	µg/l	5	<0.005	0.033[8]	0	3
Bis(2-chloroethyl)ether	µg/l	5	<0.05	0.045[8]	0	3
Bis(2-ethylhexyl)phthalate	µg/l	5	1.29	3.5[8]	0	3
Carbon tetrachloride	µg/l	5	<0.42	0.90[8]	0	3
Chlordane	µg/l	5	<0.001	0.000023[8]	0	3
Chlorodibromomethane	µg/l	5	<0.45	8.6[8]	0	3
Chloroform	µg/l	5	<0.22	130[8]	0	3
DDT	µg/l	5	<0.001	0.00017[8]	0	3
1,4-Dichlorobenzene	µg/l	5	<0.01	18[8]	0	3
3-3'-Dichlorobenzidine	µg/l	5	<0.05	0.0081[8]	0	3
1,2-Dichloroethane	µg/l	5	<0.22	28[8]	0	3
1,1-Dichloroethylene	µg/l	5	<0.31	0.9[8]	0	3
Dichlorobromomethane	µg/l	5	<0.27	6.2[8]	0	3
Dichloromethane	µg/l	5	<2.6	450[8]	0	3
1,3-Dichloropropene	µg/l	5	<0.3	8.9[8]	0	3
Dieldrin	µg/l	5	<0.001	0.00004[8]	0	3

Parameter	Units	n[1]	MEC[2]	Most Stringent Criteria	Background	RPA Endpoint[3]
2,4-Dinitrotoluene	µg/l	5	<0.05	2.6[8]	0	3
1,2-Diphenylhydrazine	µg/l	5	<0.005	0.16[8]	0	3
Halomethanes	µg/l	5	<1.8	130[8]	0	3
Heptachlor	µg/l	5	<0.001	0.00005[8]	0	3
Heptachlor epoxide	µg/l	5	<0.001	0.00002[8]	0	3
Hexachlorobenzene	µg/l	5	<0.001	0.00021[8]	0	3
Hexachlorobutadine	µg/l	5	<0.05	14[8]	0	3
Hexachloroethane	µg/l	5	<0.05	2.5[8]	0	3
Isophorone	µg/l	5	<0.05	730[8]	0	3
N-Nitrosodimethylamine	µg/l	5	<0.05	7.3[8]	0	3
N-Nitrosodi-n-propylamine	µg/l	5	<0.05	0.38[8]	0	3
N-Nitrosodiphenylamine	µg/l	5	<0.05	2.5[8]	0	3
PAH	µg/l	5	<0.001	0.0088[8]	0	3
PCB	µg/l	5	<0.001	0.000019[8]	0	3
TCDD Equivalents	µg/l	4	0.00000144	3.9E-9[8]	0	1
1,1,2,2-Tetrachloroethane	µg/l	5	<0.37	2.3[8]	0	3
Tetrachloroethylene	µg/l	5	<0.29	2.0[8]	0	3
Toxaphene	µg/l	5	<0.01	0.00021[8]	0	3
Trichloroethylene	µg/l	5	<0.3	27[8]	0	3
1,1,2-Trichloroethane	µg/l	5	<0.54	9.4[8]	0	3
2,4,6-Trichlorophenol	µg/l	5	<0.05	0.29[8]	0	3
Vinyl Chloride	µg/l	5	<0.33	36[8]	0	3

1 Number of data points available for the RPA.
2 If there is a detected value, the highest reported value is summarized in the table. If there are no detected values, the lowest MDL is summarized in the table.
3 End Point 1 – RP determined, limit required, monitoring required.
End Point 2 – Discharger determined not to have RP, monitoring may be established.
End Point 3 – RPA was inconclusive, carry over previous limits if applicable, and establish monitoring.
4 Based on the 6-Month Median in the Table 1 of the Ocean Plan.
5 Background concentrations contained in Table 3 of the Ocean Plan.
6 Based on the Daily Maximum in Table 1 of the Ocean Plan.
7 Not to exceed limits specified in title 17, division 1, chapter 5, subchapter 4, group 3, article 3, section 30253 of the California Code of Regulations. Radioactivity at levels that exceed the applicable criteria are not expected in the discharge.
8 Based on 30-Day Average in Table 1 of the Ocean Plan.

Table H-4 RPA Results Summary – Outfall 004b

Parameter	Units	n[1]	MEC[2]	Most Stringent Criteria	Background	RPA Endpoint[3]
Arsenic	µg/l	8	3.66	8[4]	3[5]	2
Cadmium	µg/l	8	.293	1[4]	0	2
Hexavalent Chromium	µg/l	8	6.46	2[4]	0	1
Copper	µg/l	18	2.89	3[4]	2[5]	2
Lead	µg/l	8	1.68	2[4]	0	2
Mercury	µg/l	8	<.004	0.04[4]	0.0005[5]	3
Nickel	µg/l	8	3.27	5[4]	0	2

Parameter	Units	n[1]	MEC[2]	Most Stringent Criteria	Background	RPA Endpoint[3]
Selenium	µg/l	8	.2	15[4]	0	2
Silver	µg/l	8	.02	0.7[4]	0.16[5]	3
Zinc	µg/l	19	12.3	20[4]	8[5]	2
Cyanide	µg/l	8	<.48	1[4]	0	3
Total Chlorine Residual	µg/l	19	90	2[4]	0	1
Ammonia-N	µg/l	19	60	600[4]	0	2
Acute Toxicity	Tua	15	.73	0.3	0	2
Chronic Toxicity	Tu_c	74	8	1[6]	0	2
Phenolic compounds (non-chlorinated)	µg/l	8	<.1	30[4]	0	3
Chlorinated phenolics	µg/l	8	<.1	1[4]	0	3
Endosulfan	µg/l	8	<.001	0.009[4]	0	3
Endrin	µg/l	8	<.001	0.002[4]	0	3
HCH	µg/l	8	<.001	0.004[4]	0	3
Radioactivity	µg/l	-	-	[7]	0	-
Acrolein	µg/l	8	<2.2	220[8]	0	3
Antimony	µg/l	8	.186	1,200[8]	0	2
Bis(2-chloroethoxy)methane	µg/l	8	<.05	4.4[8]	0	3
Bis(2-chloroisopropyl)ether	µg/l	8	<.05	1,200[8]	0	3
Chlorobenzene	µg/l	8	<.21	570[8]	0	3
Chromium III	µg/l	8	6.46	190,000[8]	0	2
di-n-butyl phthalate	µg/l	8	.0767	3,500[8]	0	2
Dichlorobenzenes	µg/l	8	<.35	5,100[8]	0	3
Diethyl phthalate	µg/l	8	.11	33,000[8]	0	2
Dimethyl phthalate	µg/l	8	.237	820,000[8]	0	3
4,6-Dinitro-2-methylphenol	µg/l	8	<.1	220[8]	0	3
2,4-Dinitrophenol	µg/l	8	<.1	4.0[8]	0	3
Ethylbenzene	µg/l	8	<.17	4,100[8]	0	3
Fluoranthene	µg/l	8	<.001	15[8]	0	3
Hexachlorocyclopentadiene	µg/l	8	<.05	58[8]	0	3
Nitrobenzene	µg/l	8	<.05	4.9[8]	0	3
Thallium	µg/l	8	.039	2[8]	0	2
Toluene	µg/l	8	<.22	85,000[8]	0	3
Tributyltin	µg/l	8	<.001	0.0014[8]	0	3
1,1,1-Trichloroethane	µg/l	8	<.32	540,000[8]	0	3
Acrylonitrile	µg/l	19	<.27	0.10[8]	0	3
Aldrin	µg/l	19	<.001	0.000022[8]	0	3
Benzene	µg/l	8	<.23	5.9[8]	0	3
Benzidine	µg/l	19	<.05	0.000069[8]	0	3
Beryllium	µg/l	8	<.005	0.033[8]	0	2
Bis(2-chloroethyl)ether	µg/l	8	<.05	0.045[8]	0	3
Bis(2-ethylhexyl)phthalate	µg/l	8	.485	3.5[8]	0	2
Carbon tetrachloride	µg/l	8	<.33	0.90[8]	0	3
Chlordane	µg/l	19	<.001	0.000023[8]	0	3

Parameter	Units	n[1]	MEC[2]	Most Stringent Criteria	Background	RPA Endpoint[3]
Chlorodibromomethane	µg/l	8	<.001	8.6[8]	0	3
Chloroform	µg/l	8	<.22	130[8]	0	3
DDT	µg/l	19	<.001	0.00017[8]	0	3
1,4-Dichlorobenzene	µg/l	8	<.01	18[8]	0	3
3-3'-Dichlorobenzidine	µg/l	13	<.05	0.0081[8]	0	3
1,2-Dichloroethane	µg/l	8	<.22	28[8]	0	3
1,1-Dichloroethylene	µg/l	8	<.31	0.9[8]	0	3
Dichlorobromomethane	µg/l	8	<.27	6.2[8]	0	3
Dichloromethane	µg/l	8	<.25	450[8]	0	3
1,3-Dichloropropene	µg/l	8	<.3	8.9[8]	0	3
Dieldrin	µg/l	19	<.001	0.00004[8]	0	3
2,4-Dinitrotoluene	µg/l	8	<.05	2.6[8]	0	3
1,2-Diphenylhydrazine	µg/l	8	<.005	0.16[8]	0	3
Halomethanes	µg/l	8	<.47	130[8]	0	3
Heptachlor	µg/l	19	<.001	0.00005[8]	0	3
Heptachlor epoxide	µg/l	19	<.001	0.00002[8]	0	3
Hexachlorobenzene	µg/l	8	<.001	0.00021[8]	0	3
Hexachlorobutadine	µg/l	8	<.05	14[8]	0	3
Hexachloroethane	µg/l	8	<.05	2.5[8]	0	3
Isophorone	µg/l	8	<.05	730[8]	0	3
N-Nitrosodimethylamine	µg/l	8	<.05	7.3[8]	0	3
N-Nitrosodi-n-propylamine	µg/l	8	<.05	0.38[8]	0	3
N-Nitrosodiphenylamine	µg/l	8	<.05	2.5[8]	0	3
PAH	µg/l	19	.022	0.0088[8]	0	3
PCB	µg/l	18	<.001	0.000019[8]	0	3
TCDD Equivalents	µg/l	18	1.32E-07	3.9E-9[8]	0	1
1,1,2,2-Tetrachloroethane	µg/l	8	<.18	2.3[8]	0	3
Tetrachloroethylene	µg/l	8	<.27	2.0[8]	0	3
Toxaphene	µg/l	19	<.00104	0.00021[8]	0	3
Trichloroethylene	µg/l	8	<.3	27[8]	0	3
1,1,2-Trichloroethane	µg/l	8	<.25	9.4[8]	0	3
2,4,6-Trichlorophenol	µg/l	8	<.05	0.29[8]	0	3
Vinyl Chloride	µg/l	8	<.33	36[8]	0	3

1 Number of data points available for the RPA.
2 If there is a detected value, the highest reported value is summarized in the table. If there are no detected values, the lowest MDL is summarized in the table.
3 End Point 1 – RP determined, limit required, monitoring required.
End Point 2 – Discharger determined not to have RP, monitoring may be established.
End Point 3 – RPA was inconclusive, carry over previous limits if applicable, and establish monitoring.
4 Based on the 6-Month Median in the Table 1 of the Ocean Plan.
5 Background concentrations contained in Table 3 of the Ocean Plan.
6 Based on the Daily Maximum in Table 1 of the Ocean Plan.
7 Not to exceed limits specified in title 17, division 1, chapter 5, subchapter 4, group 3, article 3, section 30253 of the California Code of Regulations. Radioactivity at levels that exceed the applicable criteria are not expected in the discharge.
8 Based on 30-Day Average in Table 1 of the Ocean Plan.