**CALIFORNIA REGIONAL WATER QUALITY CONTROL BOARD**
**CENTRAL VALLEY REGION**

1685 "E" Street, Fresno, California 93706
Phone (559) 445-5116 • Fax (559) 445-5910
http://www.waterboards.ca.gov/centralvalley

**ORDER R5-2014-XXXX**
**NPDES NO. CA0084239**

# WASTE DISCHARGE REQUIREMENTS FOR THE MALAGA COUNTY WATER DISTRICT ~~MALAGA~~ WASTEWATER TREATMENT FACILITY FRESNO COUNTY

The following Discharger is subject to waste discharge requirements (WDRs) set forth in this Order, and is authorized to discharge at the locations below:

**Table 1. Discharger Information**

| | |
|---|---|
| Discharger | Malaga County Water District |
| Name of Facility | ~~Malaga~~ Wastewater Treatment Facility |
| Facility Address | 3749 South Maple Avenue |
| | Fresno, CA 93725 |
| | Fresno County |

**Table 2. Discharge Locations**

| Discharge Point | Effluent Description | Discharge Point Latitude | Discharge Point Longitude | Receiving Water |
|---|---|---|---|---|
| 001 | Disinfected Tertiary-treated Municipal Wastewater | 36° 40' 41.52" N | 119° 44' 43.98" W | Fresno Irrigation District Central Canal |
| 002 | Un-disinfected Secondary-treated Municipal Wastewater | -- | -- | Groundwater |

**Table 3. Administrative Information**

| | |
|---|---|
| This Order was adopted on: | **<Adoption Date>** |
| This Order shall become effective on: | **<Effective Date>** |
| This Order shall expire on: | **<Expiration Date>** |
| The Discharger shall file a Report of Waste Discharge as an application for reissuance of WDRs in accordance with title 23, California Code of Regulations, and an application for reissuance of a National Pollutant Discharge Elimination System (NPDES) permit no later than: | **<180 days prior to the Order expiration date>** |
| The U.S. Environmental Protection Agency (U.S. EPA) and the California Regional Water Quality Control Board, Central Valley Region have classified this discharge as follows: | Major |

I, Pamela Creedon, Executive Officer, do hereby certify that this Order with all attachments is a full, true, and correct copy of the Order adopted by the California Regional Water Quality Control Board, Central Valley Region, on **[DATE]**.

_____
**PAMELA C. CREEDON**, Executive Officer

## CONTENTS

I. FACILITY INFORMATION ..... 3
II. FINDINGS ..... 3
III. DISCHARGE PROHIBITIONS ..... 4
IV. EFFLUENT LIMITATIONS AND DISCHARGE SPECIFICATIONS ..... 4
A. FLOW EFFLUENT LIMITATIONS – DISCHARGE POINTS 001 AND 002 ..... 4
B. EFFLUENT LIMITATIONS – DISCHARGE POINT 001 ..... 4
1. FINAL EFFLUENT LIMITATIONS – DISCHARGE POINT 001 ..... 4
2. INTERIM EFFLUENT LIMITATIONS – NOT APPLICABLE ..... 5
C. LAND DISCHARGE SPECIFICATIONS – DISCHARGE POINT 002 ..... 5
D. RECYCLING SPECIFICATIONS – NOT APPLICABLE ..... 6
V. RECEIVING WATER LIMITATIONS ..... 6
A. SURFACE WATER LIMITATIONS ..... 6
B. GROUNDWATER LIMITATIONS ..... 7
VI. PROVISIONS ..... 8
A. STANDARD PROVISIONS ..... 8
B. MONITORING AND REPORTING PROGRAM (MRP) REQUIREMENTS ..... 11
C. SPECIAL PROVISIONS ..... 11
1. REOPENER PROVISIONS ..... 11
2. SPECIAL STUDIES, TECHNICAL REPORTS, AND ADDITIONAL MONITORING REQUIREMENTS ..... 12
3. BEST MANAGEMENT PRACTICES AND POLLUTION PREVENTION ..... 14
4. CONSTRUCTION, OPERATION, AND MAINTENANCE SPECIFICATIONS ..... 14
5. SPECIAL PROVISIONS FOR MUNICIPAL FACILITIES (POTWS ONLY) ..... 16
6. OTHER SPECIAL PROVISIONS ..... 18
7. COMPLIANCE SCHEDULES – NOT APPLICABLE ..... 19
VII. COMPLIANCE DETERMINATION ..... 19

## TABLES

TABLE 1. DISCHARGER INFORMATION ..... 1
TABLE 2. DISCHARGE LOCATIONS ..... 1
TABLE 3. ADMINISTRATIVE INFORMATION ..... 1
TABLE 4. FINAL EFFLUENT LIMITATIONS ..... 5
TABLE 5. LAND DISCHARGE SPECIFICATIONS ..... 6

## ATTACHMENTS

ATTACHMENT A – DEFINITIONS ..... A-1
ATTACHMENT B – MAP ..... B-1
ATTACHMENT C – FLOW SCHEMATIC ..... C-1
ATTACHMENT D – STANDARD PROVISIONS ..... D-1
ATTACHMENT E – MONITORING AND REPORTING PROGRAM ..... E-1
ATTACHMENT F – FACT SHEET ..... F-1
ATTACHMENT G – SUMMARY OF REASONABLE POTENTIAL ANALYSIS AT DISCHARGE POINT 001 ..... G-1
ATTACHMENT H – CALCULATION OF WQBELS ..... H-1
ATTACHMENT I – REQUIRED REPORTING LEVELS FOR PRIORITY POLLUTANTS ..... I-1

## I. FACILITY INFORMATION

Information describing the Malaga County Water District Wastewater Treatment Facility (Facility) is summarized in Table 1 and in sections I and II of the Fact Sheet (Attachment F). Section I of the Fact Sheet also includes information regarding the Facility's permit application.

## II. FINDINGS

The California Regional Water Quality Control Board, Central Valley Region (hereinafter Central Valley Water Board), finds:

**A. Legal Authorities.** This Order serves as WDRs pursuant to article 4, chapter 4, division 7 of the California Water Code (Water Code; commencing with section 13260). This Order is also issued pursuant to section 402 of the federal Clean Water Act (CWA) and implementing regulations adopted by the U.S. EPA and chapter 5.5, division 7 of the Water Code (commencing with section 13370). It shall serve as a NPDES permit for point source discharges from this Facility to surface waters.

**B. Background and Rationale for Requirements.** The Central Valley Water Board developed the requirements in this Order based on information submitted as part of the application, through monitoring and reporting programs, and other available information. The Fact Sheet (Attachment F), which contains background information and rationale for the requirements in this Order, is hereby incorporated into and constitutes Findings for this Order. Attachments A through E and G through I are also incorporated into this Order.

**C. Provisions and Requirements Implementing State Law.** The provisions/requirements in subsections IV.C, V.B, and portions of VI.C are included to implement state law only. These provisions/requirements are not required or authorized under the federal CWA; consequently, violations of these provisions/requirements are not subject to the enforcement remedies that are available for NPDES violations.

**D. Monitoring and Reporting.** Title 40, Code of Federal Regulations, Section 122.48 (40 CFR 122.48) requires that all NPDES permits specify requirements for recording and reporting monitoring results. Water Code sections 13267 and 13383 authorize the Central Valley Water Board to require technical and monitoring reports. The Monitoring and Reporting Program establishes monitoring and reporting requirements to implement federal and State requirements. The Monitoring and Reporting Program is provided in Attachment E.

The technical and monitoring reports in this Order are required in accordance with Water Code section 13267, which states the following in subsection (b)(1), "*In conducting an investigation specified in subdivision (a), the regional board may require that any person who has discharged, discharges, or is suspected of having discharged or discharging, or who proposes to discharge waste within its region, or any citizen or domiciliary, or political agency or entity of this state who has discharged, discharges, or is suspected of having discharged or discharging, or who proposes to discharge, waste outside of its region that could affect the quality of waters within its region shall furnish, under penalty of perjury, technical or monitoring program reports which the regional board requires. The burden, including costs, of these reports shall bear a reasonable relationship to the need for the report and the benefits to be obtained from the reports. In requiring those reports, the regional board shall provide the person with a written explanation with regard to the need for the reports, and shall identify the evidence that supports requiring that person to provide the reports.*"

The Discharger owns and operates the Facility subject to this Order. The monitoring reports required by this Order are necessary to determine compliance with this Order. The need for the monitoring reports is discussed in the Fact Sheet.

**E. Notification of Interested Parties.** The Central Valley Water Board has notified the Discharger and interested agencies and persons of its intent to prescribe WDRs for the discharge and has provided them with an opportunity to submit their written comments and recommendations. Details of the notification are provided in the Fact Sheet.

**F. Consideration of Public Comment.** The Central Valley Water Board, in a public meeting, heard and considered all comments pertaining to the discharge. Details of the Public Hearing are provided in the Fact Sheet.

THEREFORE, IT IS HEREBY ORDERED that Order R5-2008-0033 is rescinded upon the effective date of this Order except for enforcement purposes, and, in order to meet the provisions contained in division 7 of the Water Code (commencing with section 13000) and regulations adopted thereunder, and the provisions of the CWA and regulations and guidelines adopted thereunder, the Discharger shall comply with the requirements in this Order. This action in no way prevents the Central Valley Water Board from taking enforcement action for past violations of the previous Order.

## III. DISCHARGE PROHIBITIONS

**A.** Discharge of wastewater from the Facility, as the Facility is specifically described in the Fact Sheet in section II, in a manner different from that described in this Order is prohibited.

**B.** The by-pass or overflow of wastes to surface waters is prohibited, except as allowed by Federal Standard Provisions I.G and I.H (Attachment D).

**C.** Neither the discharge nor its treatment shall create a condition of pollution or nuisance as defined in Water Code section 13050.

**D.** The Discharger shall not allow pollutant-free wastewater to be discharged into the treatment or disposal system in amounts that significantly diminish the system's capability to comply with this Order. Pollutant-free wastewater means rainfall, groundwater, cooling waters, and condensates that are essentially free of pollutants.

**E.** Discharge of waste classified as 'hazardous', as defined in Title 23, California Code of Regulations (CCR), Section 2521(a), et seq, is prohibited.

## IV. EFFLUENT LIMITATIONS AND DISCHARGE SPECIFICATIONS

### A. Flow Effluent Limitations – Discharge Points 001 and 002

1. **Average Monthly Flow.** The average monthly discharge flow shall not exceed the following:

   a. 0.45 mgd at Discharge Point 001. Compliance shall be determined at monitoring location EFF-001.

   b. 0.49 mgd at Discharge Point 002, unless the Executive Officer approves a higher flow, up to 0.85 mgd, as allowed by Provision VI.C.2.b. Compliance shall be determined at monitoring location EFF-002.

   c. 1.2 mgd, total for both discharge points. Compliance shall be determined by summing the flows at monitoring locations EFF-001 and EFF-002.

### B. Effluent Limitations – Discharge Point 001

#### 1. Final Effluent Limitations – Discharge Point 001

The Discharger shall maintain compliance with the following effluent limitations at Discharge Point 001, with compliance measured at Monitoring Location EFF-001, as described in the Monitoring and Reporting Program, Attachment E:

a. The Discharger shall maintain compliance with the effluent limitations specified in Table 4:

**Table 4. Final Effluent Limitations**

| Parameter | Units | Effluent Limitations | | | | |
|---|---|---|---|---|---|---|
| | | Average Monthly | Average Weekly | Maximum Daily | Instantaneous Minimum | Instantaneous Maximum |
| Biochemical Oxygen Demand 5-day @ 20°C ($BOD_5$) | mg/L | 10 | 15 | 30 | -- | -- |
| | lbs/day | 38 | 56 | 113 | -- | -- |
| Total Suspended Solids (TSS) | mg/L | 10 | 15 | 30 | -- | -- |
| | lbs/day | 38 | 56 | 113 | -- | -- |
| pH | standard units | -- | -- | -- | 6.5 | 8.3 |
| Copper, Total Recoverable | µg/L | 6.5 | -- | 12 | -- | -- |
| Cyanide, Total (as CN) | µg/L | 4.2 | -- | 8.7 | -- | -- |
| Aluminum, Total Recoverable | µg/L | 341 | 761 | -- | -- | -- |
| Ammonia, un-ionized (as N) | mg/L | -- | -- | 0.025 | -- | -- |
| Boron | mg/L | -- | -- | 1.0 | -- | -- |
| Chloride | mg/L | -- | -- | 175 | -- | -- |
| Nitrate plus Nitrite (as N) | mg/L | 10. | -- | -- | -- | -- |

b. **Percent Removal.** The average monthly percent removal of $BOD_5$ and TSS shall not be less than 90 percent.

c. **Acute Whole Effluent Toxicity.** Survival of aquatic organisms in 96-hour bioassays of undiluted waste shall be no less than:

i. 70%, minimum for any one bioassay;

ii. 90%, median for any three consecutive bioassays.

d. **Chronic Whole Effluent Toxicity.** There shall be no chronic toxicity in the effluent discharge.

e. **Total Coliform.** Effluent total coliform shall not exceed:

i. 2.2 most probable number (MPN) per 100 mL, as a 7-sample median;

ii. 23 MPN/100 mL, more than once in any 30-day period; and

iii. 240 MPN/100 mL, at any time.

f. **Electrical Conductivity @ 25°C (EC).** The 12-month rolling average effluent EC shall not exceed 1,000 µmhos/cm or the 12-month rolling average EC of the source water plus 500 µmhos/cm, whichever is more stringent. When source water is from more than one source, the EC shall be a flow-weighted average of all sources.

**2. Interim Effluent Limitations – Not Applicable**

**C. Land Discharge Specifications – Discharge Point 002**

1. The Discharger shall maintain compliance with the following discharge specifications at Discharge Point 002, with compliance measured at Monitoring Location EFF-002, as described in the Monitoring and Reporting Program, Attachment E:

a. The Discharger shall maintain compliance with the discharge specifications in Table 5:

**Table 5. Land Discharge Specifications**

| Parameter | Units | Land Discharge Specifications | | | |
|---|---|---|---|---|---|
| | | Average Monthly | Maximum Daily | Instantaneous Minimum | Instantaneous Maximum |
| Biochemical Oxygen Demand 5-day @ 20°C ($BOD_5$) | mg/L | 40 | 80 | -- | -- |
| Total Suspended Solids (TSS) | mg/L | 40 | 80 | -- | -- |
| pH | standard units | -- | -- | 6.5 | 8.3 |
| Boron | mg/L | -- | 1.0 | -- | -- |
| Chloride | mg/L | -- | 175 | -- | -- |
| Settleable Solids | mL/L | 0.2 | 1.0 | -- | -- |

b. **Electrical Conductivity @ 25°C (EC).** The 12-month rolling average effluent EC shall not exceed 1,000 µmhos/cm or the 12-month rolling average EC of the source water plus 500 µmhos/cm, whichever is more stringent. When source water is from more than one source, the EC shall be a flow-weighted average of all sources.

### D. Recycling Specifications – Not Applicable

## V. RECEIVING WATER LIMITATIONS

### A. Surface Water Limitations

The discharge shall not cause the following in Central Canal:

1. **Un-ionized Ammonia.** Un-ionized ammonia to be present in amounts that adversely affect beneficial uses nor to be present in excess of 0.025 mg/L (as N).
2. **Bacteria.** The fecal coliform concentration, based on a minimum of not less than five samples for any 30-day period, to exceed a geometric mean of 200 MPN/100 mL, nor more than 10 percent of the total number of fecal coliform samples taken during any 30-day period to exceed 400 MPN/100 mL.
3. **Biostimulatory Substances.** Water to contain biostimulatory substances in concentrations that promote aquatic growths to the extent that such growths cause nuisance or adversely affect beneficial uses.
4. **Chemical Constituents.** Chemical constituents to be present in concentrations that adversely affect beneficial uses.
5. **Color.** Discoloration that causes nuisance or adversely affects beneficial uses.
6. **Dissolved Oxygen:**
   a. The monthly median dissolved oxygen concentration to fall below 85 percent of saturation in the main water mass at centroid of flow;
   b. The 95 percentile dissolved oxygen concentration to fall below 75 percent of saturation; nor
   c. The dissolved oxygen concentration to be reduced below 5.0 mg/L at any time.
7. **Floating Material.** Floating material, including but not limited to solids, liquids, foams, and scum, to be present in amounts that cause nuisance or adversely affect beneficial uses.
8. **Oil and Grease.** Oils, greases, waxes, or other materials to be present in concentrations that cause nuisance, result in a visible film or coating on the surface of the water or on objects in the water, or otherwise adversely affect beneficial uses.
9. **pH.** The pH to be depressed below 6.5, nor raised above 8.3.

10. **Pesticides:**
    a. Pesticides to be present, individually or in combination, in concentrations that adversely affect beneficial uses;
    b. Pesticides to be present in bottom sediments or aquatic life in concentrations that adversely affect beneficial uses;
    c. Pesticides to be present in concentration in excess of the maximum contaminant levels (MCLs) specified in Table 64444-A (Organic Chemicals) of section 64444 of Title 22 of the CCR.
11. **Radioactivity:**
    a. Radionuclides to be present in concentrations that are deleterious to human, plant, animal, or aquatic life nor that result in the accumulation of radionuclides in the food web to an extent that presents a hazard to human, plant, animal, or aquatic life.
    b. Radionuclides to be present in excess of the MCLs specified in Table 64442 of section 64442 and Table 64443 of section 64443 of Title 22 of the CCR.
12. **Suspended Sediments.** The suspended sediment load and suspended sediment discharge rate of surface waters to be altered in such a manner as to cause nuisance or adversely affect beneficial uses.
13. **Settleable Materials.** Substances to be present in concentrations that result in the deposition of material that causes nuisance or adversely affects beneficial uses.
14. **Suspended Material.** Suspended material to be present in concentrations that cause nuisance or adversely affect beneficial uses.
15. **Taste and Odors.** Taste- or odor-producing substances to be present in concentrations that cause nuisance, adversely affect beneficial uses, or impart undesirable tastes or odors to fish flesh or other edible products of aquatic origin or to domestic or municipal water supplies.
16. **Temperature.** The natural temperature to be increased by more than 5°F. Compliance to be determined based on the difference in temperature at RSW-001 and RSW-002.
17. **Toxicity.** Toxic substances to be present, individually or in combination, in concentrations that produce detrimental physiological responses in human, plant, animal, or aquatic life.
18. **Turbidity.** The turbidity to increase as follows:
    a. More than 1 Nephelometric Turbidity Unit (NTU) where natural turbidity is between 0 and 5 NTUs;
    b. More than 20 percent where natural turbidity is between 5 and 50 NTUs;
    c. More than 10 NTUs where natural turbidity is equal to or between 50 and 100 NTUs; nor
    d. More than 10 percent where natural turbidity is greater than 100 NTUs.

**B. Groundwater Limitations**

1. Release of waste constituents associated with the Facility or discharge shall not cause or contribute to groundwater containing constituent concentrations in excess of the concentrations specified below or natural background quality for the specified constituents, whichever is greater:
    a. Nitrate (as N) of 10 mg/L.

b. For constituents identified in Title 22 of the California Code of Regulations, the MCLs quantified therein.

## VI. PROVISIONS

### A. Standard Provisions

1. The Discharger shall comply with all Standard Provisions included in Attachment D.
2. The Discharger shall comply with the following provisions. In the event that there is any conflict, duplication, or overlap between provisions specified by this Order, the more stringent provision shall apply:

   a. If the Discharger's wastewater treatment plant is publicly owned or subject to regulation by California Public Utilities Commission, it shall be supervised and operated by persons possessing certificates of appropriate grade according to Title 23, CCR, division 3, chapter 26.

   b. After notice and opportunity for a hearing, this Order may be terminated or modified for cause, including, but not limited to:

      i. violation of any term or condition contained in this Order;

      ii. obtaining this Order by misrepresentation or by failing to disclose fully all relevant facts;

      iii. a change in any condition that requires either a temporary or permanent reduction or elimination of the authorized discharge; and

      iv. a material change in the character, location, or volume of discharge.

      The causes for modification include:

      i. *New regulations.* New regulations have been promulgated under section 405(d) of the CWA, or the standards or regulations on which the Order was based have been changed by promulgation of amended standards or regulations or by judicial decision after the Order was issued.

      ii. *Land application plans.* When required by an Order condition to incorporate a land application plan for beneficial reuse of sewage sludge, to revise an existing land application plan, or to add a land application plan.

      iii. *Change in sludge use or disposal practice.* Under 40 CFR 122.62(a)(1), a change in the Discharger's sludge use or disposal practice is a cause for modification of the Order. It is cause for revocation and reissuance if the Discharger requests or agrees.

      The Central Valley Water Board may review and revise this Order at any time upon application of any affected person or the Central Valley Water Board's own motion.

   c. If a toxic effluent standard or prohibition (including any scheduled compliance specified in such effluent standard or prohibition) is established under section 307(a) of the CWA, or amendments thereto, for a toxic pollutant that is present in the discharge authorized herein, and such standard or prohibition is more stringent than any limitation upon such pollutant in this Order, the Central Valley Water Board will revise or modify this Order in accordance with such toxic effluent standard or prohibition.

      The Discharger shall comply with effluent standards and prohibitions within the time provided in the regulations that establish those standards or prohibitions, even if this Order has not yet been modified.

d. This Order shall be modified, or alternately revoked and reissued, to comply with any applicable effluent standard or limitation issued or approved under sections 301(b)(2)(C) and (D), 304(b)(2), and 307(a)(2) of the CWA, if the effluent standard or limitation so issued or approved:

   i. Contains different conditions or is otherwise more stringent than any effluent limitation in the Order; or

   ii. Controls any pollutant limited in the Order.

   The Order, as modified or reissued under this paragraph, shall also contain any other requirements of the CWA then applicable.

e. The provisions of this Order are severable. If any provision of this Order is found invalid, the remainder of this Order shall not be affected.

f. The Discharger shall take all reasonable steps to minimize any adverse effects to waters of the State or users of those waters resulting from any discharge or sludge use or disposal in violation of this Order. Reasonable steps shall include such accelerated or additional monitoring as necessary to determine the nature and impact of the non-complying discharge or sludge use or disposal.

g. The Discharger shall ensure compliance with any existing or future pretreatment standard promulgated by U.S. EPA under section 307 of the CWA, or amendment thereto, for any discharge to the municipal system.

h. A copy of this Order and any amendments or modifications shall be maintained at the discharge Facility and be available at all times to operating personnel. Key operating personnel shall be familiar with its content.

i. Safeguard to electric power failure:

   i. The Discharger shall provide safeguards to assure that, should there be reduction, loss, or failure of electric power, the discharge shall comply with the terms and conditions of this Order.

   ii. Upon written request by the Central Valley Water Board, the Discharger shall submit a written description of safeguards. Such safeguards may include alternate power sources, standby generators, retention capacity, operating procedures, or other means. A description of the safeguards provided shall include an analysis of the frequency, duration, and impact of power failures experienced over the past 5 years on effluent quality and on the capability of the Discharger to comply with the terms and conditions of the Order. The adequacy of the safeguards is subject to the approval of the Central Valley Water Board.

   iii. Should the treatment works not include safeguards against reduction, loss, or failure of electric power, or should the Central Valley Water Board not approve the existing safeguards, the Discharger shall, within 90 days of having been advised in writing by the Central Valley Water Board that the existing safeguards are inadequate, provide to the Central Valley Water Board and U.S. EPA a schedule of compliance for providing safeguards such that in the event of reduction, loss, or failure of electric power, the Discharger shall comply with the terms and conditions of this Order. The schedule of compliance shall, upon approval of the Central Valley Water Board, become a condition of this Order.

j. The Discharger, upon written request of the Central Valley Water Board, shall file with the Board a technical report on its preventive (failsafe) and contingency (cleanup) plans for controlling accidental discharges, and for minimizing the effect of such events. This

report may be combined with that required under Standard Provision VI.A.2.i of this Order.

The technical report shall:

i. Identify the possible sources of spills, leaks, untreated waste by-pass, and contaminated drainage. Loading and storage areas, power outage, waste treatment unit outage, and failure of process equipment, tanks and pipes should be considered.

ii. Evaluate the effectiveness of present facilities and procedures and state when they became operational.

iii. Predict the effectiveness of the proposed facilities and procedures and provide an implementation schedule containing interim and final dates when they will be constructed, implemented, or operational.

The Central Valley Water Board, after review of the technical report, may establish conditions which it deems necessary to control accidental discharges and to minimize the effects of such events. Such conditions shall be incorporated as part of this Order, upon notice to the Discharger.

k. A publicly owned treatment works whose waste flow has been increasing, or is projected to increase, shall estimate when flows will reach hydraulic and treatment capacities of its treatment and disposal facilities. The projections shall be made in January, based on the last 3 years' average dry weather flows, peak wet weather flows and total annual flows, as appropriate. When any projection shows that capacity of any part of the facilities may be exceeded in 4 years, the Discharger shall notify the Central Valley Water Board by 31 January. A copy of the notification shall be sent to appropriate local elected officials, local permitting agencies and the press. Within 120 days of the notification, the Discharger shall submit a technical report showing how it will prevent flow volumes from exceeding capacity or how it will increase capacity to handle the larger flows. The Central Valley Water Board may extend the time for submitting the report.

l. The Discharger shall submit technical reports as directed by the Executive Officer. All technical reports required herein that involve planning, investigation, evaluation, or design, or other work requiring interpretation and proper application of engineering or geologic sciences, shall be prepared by or under the direction of persons registered to practice in California pursuant to California Business and Professions Code, sections 6735, 7835, and 7835.1. To demonstrate compliance with Title 16, CCR, sections 415 and 3065, all technical reports must contain a statement of the qualifications of the responsible registered professional(s). As required by these laws, completed technical reports must bear the signature(s) and seal(s) of the registered professional(s) in a manner such that all work can be clearly attributed to the professional responsible for the work.

m. The Central Valley Water Board is authorized to enforce the terms of this permit under several provisions of the Water Code, including, but not limited to, sections 13350, 13385, 13386, and 13387.

n. For publicly owned treatment works, prior to making any change in the point of discharge, place of use, or purpose of use of treated wastewater that results in a permanent decrease of flow in any portion of a watercourse, the Discharger must file a petition with the State Water Board, Division of Water Rights, and receive approval for such a change. (Water Code section 1211).

o. In the event of any change in control or ownership of land or waste discharge facilities presently owned or controlled by the Discharger, the Discharger shall notify the succeeding owner or operator of the existence of this Order by letter, a copy of which shall be immediately forwarded to the Central Valley Water Board.

To assume operation under this Order, the succeeding owner or operator must apply in writing to the Executive Officer requesting transfer of the Order. The request must contain the requesting entity's full legal name, the state of incorporation if a corporation, address and telephone number of the persons responsible for contact with the Central Valley Water Board, and a statement. The statement shall comply with the signatory and certification requirements in the federal Standard Provisions (Attachment D, section V.B) and state that the new owner or operator assumes full responsibility for compliance with this Order. Failure to submit the request shall be considered a discharge without requirements, a violation of the Water Code. Transfer shall be approved or disapproved in writing by the Executive Officer.

p. Failure to comply with provisions or requirements of this Order, or violation of other applicable laws or regulations governing discharges from this Facility, may subject the Discharger to administrative or civil liabilities, criminal penalties, and/or other enforcement remedies to ensure compliance. Additionally, certain violations may subject the Discharger to civil or criminal enforcement from appropriate local, state, or federal law enforcement entities.

q. In the event the Discharger does not comply or will be unable to comply for any reason, with any prohibition, instantaneous minimum effluent limitation, instantaneous maximum effluent limitation, maximum daily effluent limitation, acute toxicity effluent limitation, or receiving water limitation contained in this Order, the Discharger shall notify the Central Valley Water Board by telephone at (559) 445-5116 within 24 hours of having knowledge of such noncompliance, and shall confirm this notification in writing within five days, unless the Central Valley Water Board waives confirmation. The written notification shall state the nature, time, duration, and cause of noncompliance, and shall describe the measures being taken to remedy the current noncompliance and prevent recurrence including, where applicable, a schedule of implementation. Other noncompliance requires written notification as above at the time of the normal monitoring report.

## B. Monitoring and Reporting Program (MRP) Requirements

The Discharger shall comply with the MRP, and future revisions thereto, in Attachment E of this Order.

## C. Special Provisions

### 1. Reopener Provisions

a. Conditions that necessitate a major modification of an order are described in 40 CFR 122.62, including, but not limited to:

i. If new or amended applicable water quality standards are promulgated or approved pursuant to section 303 of the CWA, or amendments thereto, this Order may be reopened and modified in accordance with the new or amended standards.

ii. When new information, that was not available at the time of Order issuance, would have justified different Order conditions at the time of issuance.

b. This Order may be reopened for modification, or revocation and reissuance, as a result of the detection of a reportable priority pollutant generated by special conditions included in this Order. These special conditions may be, but are not limited to, fish tissue

sampling, whole effluent toxicity monitoring requirements on internal waste stream(s), and monitoring for surrogate parameters. Additional requirements may be included in this Order as a result of the special condition monitoring data.

c. **Whole Effluent Toxicity.** As a result of a Toxicity Reduction Evaluation (TRE), this Order may be reopened to include a numeric chronic toxicity effluent limitation, new acute toxicity effluent limitations, and/or effluent limitations for specific toxicants identified in the TRE. Additionally, if the State Water Board revises the SIP's toxicity control provisions that would require the establishment of numeric chronic toxicity effluent limitations, this Order may be reopened to include a numeric chronic toxicity effluent limitation based on the new provisions.

d. **Water-Effects Ratios (WERs) and Metal Translators.** A default WER of 1.0 has been used in this Order for calculating CTR criteria for applicable priority pollutant inorganic constituents. In addition, default dissolved-to-total metal translators have been used to convert water quality objectives from dissolved to total recoverable when developing effluent limitations for copper. If the Discharger performs studies to determine site-specific WERs and/or site-specific dissolved-to-total metal translators, this Order may be reopened to modify the effluent limitations for the applicable inorganic constituents.

e. **Drinking Water Policy.** On 26 July 2013, the Central Valley Water Board adopted Resolution R5-2013-0098 amending the Basin Plan and establishing a Drinking Water Policy. The State Water Board approved the Drinking Water Policy on 3 December 2013. This Order may be reopened to incorporate monitoring of drinking water constituents to implement the Drinking Water Policy.

f. **Ultraviolet Light (UV) Disinfection Operating Specifications.** The UV operating specifications in this Order are based on the UV guidelines developed by the National Water Research Institute and American Water Works Association Research Foundation titled, "Ultraviolet Disinfection Guidelines for Drinking Water and Water Reuse." If the Discharger conducts a site-specific UV engineering study that identifies site-specific UV operating specifications that will achieve the virus inactivation equivalent to Title 22 disinfected tertiary recycled water, this Order may be reopened to modify the UV operating specifications.

g. **Beneficial Use Dedesignation.** If the Discharger chooses to complete a dedesignation study and it results in adoption of a Basin Plan amendment that dedesignates one or more beneficial uses for Central Canal, this Order shall be reopened to implement necessary changes.

**2. Special Studies, Technical Reports, and Additional Monitoring Requirements**

a. **TRE Requirements.** For compliance with the Basin Plan's narrative toxicity objective, this Order requires the Discharger to conduct chronic whole effluent toxicity (WET) testing, as specified in Attachment E, section V. Furthermore, this Provision requires the Discharger to investigate the causes of, and identify corrective actions to reduce or eliminate effluent toxicity. If the discharge exceeds the numeric toxicity monitoring trigger during accelerated monitoring established in this Provision, the Discharger is required to initiate a TRE in accordance with an approved TRE Work Plan, and take actions to mitigate the impact of the discharge and prevent recurrence of toxicity. A TRE is a site-specific study conducted in a stepwise process to identify the source(s) of toxicity and the effective control measures for effluent toxicity. TREs are designed to identify the causative agents and sources of whole effluent toxicity, evaluate the effectiveness of the toxicity control options, and confirm the reduction in effluent toxicity.

This Provision includes procedures for accelerated chronic toxicity monitoring and TRE initiation.

i. **TRE Work Plan.** By **<90 days from the effective date of this Order>**, the Discharger shall submit to the Central Valley Water Board a TRE Work Plan for approval by the Executive Officer. The TRE Work Plan shall outline the procedures for identifying the source(s) of, and reducing or eliminating effluent toxicity. The TRE Work Plan must be developed in accordance with U.S. EPA guidance, as listed in Attachment F – Fact Sheet, Section VI.B.2.a and be of adequate detail to allow the Discharger to immediately initiate a TRE as required in this Provision.

ii. **Accelerated Monitoring and TRE Initiation.** When the numeric toxicity monitoring trigger is exceeded during regular chronic toxicity monitoring, and the testing meets all test acceptability criteria, the Discharger shall initiate accelerated monitoring as required in the Accelerated Monitoring Specifications. The Discharger shall initiate a TRE to address effluent toxicity if any WET testing results exceed the numeric toxicity monitoring trigger during accelerated monitoring.

iii. **Numeric Toxicity Monitoring Trigger.** The numeric toxicity monitoring trigger to initiate a TRE is >1 TUc (where TUc = 100/NOEC)(NOEC = No Observed Effect Concentration). The monitoring trigger is not an effluent limitation; it is the toxicity threshold at which the Discharger is required to begin accelerated monitoring and initiate a TRE.

iv. **Accelerated Monitoring Specifications.** If the numeric toxicity monitoring trigger is exceeded during regular chronic toxicity testing, the Discharger shall initiate accelerated monitoring within 14 days of notification by the laboratory of the exceedance. Accelerated monitoring shall consist of four chronic toxicity tests in a six-week period (i.e., one test conducted every two weeks) using the species that exhibited toxicity. The following protocol shall be used for accelerated monitoring and TRE initiation:

(a) If the results of four consecutive accelerated monitoring tests do not exceed the monitoring trigger, the Discharger may cease accelerated monitoring and resume regular chronic toxicity monitoring. However, notwithstanding the accelerated monitoring results, if there is adequate evidence of effluent toxicity, the Executive Officer may require that the Discharger initiate a TRE.

(b) If the source(s) of the toxicity is easily identified (e.g., temporary Facility upset), the Discharger shall make necessary corrections to the Facility and shall continue accelerated monitoring until four consecutive accelerated tests do not exceed the monitoring trigger. Upon confirmation that the effluent toxicity has been removed, the Discharger may cease accelerated monitoring and resume regular chronic toxicity monitoring.

(c) If the result of any accelerated toxicity test exceeds the monitoring trigger, the Discharger shall cease accelerated monitoring and begin a TRE to investigate the cause(s) of, and identify corrective actions to reduce or eliminate effluent toxicity. **Within thirty (30) days** of notification by the laboratory of any test result exceeding the monitoring trigger during accelerated monitoring, the Discharger shall submit a TRE Action Plan to the Central Valley Water Board including, at minimum:

(1) Specific actions the Discharger will take to investigate and identify the cause(s) of toxicity, including a TRE WET monitoring schedule;

(2) Specific actions the Discharger will take to mitigate the impact of the discharge and prevent the recurrence of toxicity; and

(3) A schedule for these actions.

b. **Request for Increase in Flow.** As described in Attachment F – Fact Sheet, Section II.B.3, the estimated disposal capacity of the ponds (Discharge Point 002) is approximately 0.49 mgd. This Order restricts the flow to Discharge Point 002 to 0.49 mgd as an average monthly. Order R5-2008-0033 included an effluent flow limitation to Discharge Point 002 of 0.85 mgd, as an average monthly. The Discharger may request an increase in flow at Discharge Point 002, up to 0.85 mgd. The request for the increase in flow must include supporting calculations and documentation showing the ponds have enough capacity for reliably disposing of the requested average monthly flow. At minimum, the request must address the percolation rate and how the rate was determined. The request must also include a proposed maintenance program for the disposal ponds, which shall include an ongoing schedule for performing maintenance work to maintain adequate disposal capacity. The increased flow will be subject to Executive Officer approval, and the Discharger may not discharge at the higher flow rate until any and all proposed maintenance work has been completed and the request for an increase in flow has been approved by the Central Valley Water Board Executive Officer. The Discharger may request an increase in flow at any time during the term of this Order. If the Discharger requests an increase in flow and the request is approved, the Discharger must submit an annual update in its Annual Report, as described in Attachment E – MRP, Section X.C.3.e.

**3. Best Management Practices and Pollution Prevention**

a. **Salinity Evaluation and Minimization Plan.** The Discharger shall prepare a salinity evaluation and minimization plan to identify and address sources of salinity to and from the Facility. Sources of salinity shall include sources to the Facility, including sources from industrial users, and sources at the Facility (e.g., from chemical addition). The plan shall be completed and submitted to the Central Valley Water Board by **<9 months of the adoption date of this Order>** for the approval by the Executive Officer.

**4. Construction, Operation, and Maintenance Specifications**

a. **Filtration System Operating Specifications**

i. When coagulation is used, the Discharger shall operate the treatment system to ensure that the turbidity measured at FIL-002, as described in Attachment E – MRP, shall not exceed:

(a) 2 NTU as a daily average;

(b) 5 NTU more than 5 percent of the time within a 24-hour period; and

(c) 10 NTU, at any time.

ii. When coagulation is <u>not</u> used, the Discharger shall operate the treatment system to ensure:

(a) The turbidity of the influent to the filtration unit measured at FIL-001 (see Attachment E – MRP) shall not exceed 5 NTU for more than 15 minutes and never exceed 10 NTU; and

(b) The effluent turbidity measured at FIL-002 (see Attachment E – MRP) shall not exceed 2 NTU at any time.

b. **Filtration Rate.** The maximum filtration rate shall not exceed 5 gallons per minute per square foot of surface area, as measured at Monitoring Location FIL-001.

c. **Ultraviolet Light (UV) Disinfection System Operating Specifications.** The UV disinfection system must be operated in accordance with an operations and maintenance program that ensures adequate disinfection, and shall meet the following minimum specifications to provide virus inactivation equivalent to Title 22 Disinfected Tertiary Recycled Water:

   i. **UV Dose.** The minimum hourly average UV dose in the UV reactor shall be 100 millijoules per square centimeter ($mJ/cm^2$).

   ii. **UV Transmittance.** The minimum hourly average UV transmittance (at 254 nanometers) in the effluent measured at UVS-001 shall not fall below 55 percent.

   iii. The lamp sleeves and cleaning system components must be visually inspected per the manufacturer's operations manual for physical wear (scoring, solarization, seal leaks, cleaning fluid levels, etc.) and to check the efficacy of the cleaning system.

   iv. The lamp sleeves must be cleaned periodically as necessary to meet the UV dose requirements.

   v. Lamps must be replaced per the manufacturer's operations manual, or sooner, if there are indications the lamps are failing to provide adequate disinfection. Lamp age and lamp replacement records must be maintained.

d. **Disposal Ponds Operating Requirements**

   i. The disposal ponds shall be designed, constructed, operated, and maintained to prevent inundation or washout due to floods with a 100-year return frequency.

   ii. Public contact with wastewater shall be precluded through such means as fences, signs, and other acceptable alternatives.

   iii. Ponds shall be managed to prevent breeding of mosquitoes. In particular,

      (a) An erosion control program should assure that small coves and irregularities are not created around the perimeter of the water surface.

      (b) Weeds shall be minimized.

      (c) Dead algae, vegetation, and debris shall not accumulate on the water surface.

   iv. Vegetation management operations in areas in which nesting birds have been observed shall be carried out either before or after, but not during, the 1 April through 30 June bird nesting season.

   v. Ponds shall have sufficient capacity to accommodate allowable wastewater flow and design seasonal precipitation and ancillary inflow and infiltration during the non-irrigation season (i.e., during periods when there are no irrigation water deliveries). Design seasonal precipitation shall be based on total annual precipitation using a return period of 100 years, distributed monthly in accordance with historical rainfall patterns. The Discharger shall operate and maintain all ponds sufficiently to protect the integrity of containment dams and berms and prevent overtopping and/or structural failure. Unless a California-registered civil engineer certifies (based on design, construction, and conditions of operation and maintenance) that less freeboard is adequate, the operating freeboard in any pond shall never be less than two feet (measured vertically from the lowest possible points of overflow).

vi. Prior to the onset of the rainy season each year, available pond storage capacity shall at least equal the volume necessary to comply with the Disposal Ponds Operating Requirement at Section VI.C.4.d.v, above.

vii. Objectionable odors originating at this Facility shall not be perceivable beyond the limits of the wastewater treatment and disposal areas (or property owned by the Discharger) at an intensity that creates or threatens to create nuisance conditions.

viii. As a means of discerning compliance with Disposal Ponds Operation Requirement at Section VI.C.4.d.vii, above, the dissolved oxygen (DO) content in the upper one foot of any disposal pond shall not be less than 1.0 mg/L for three consecutive weekly sampling events. If the DO in any single pond is below 1.0 mg/L for three consecutive sampling events, the Discharger shall report the findings to the Central Valley Water Board in writing within ten (10) days and shall include a specific plan to resolve the low DO results within thirty (30) days.

e. **Disposal Ponds Maintenance Requirements**

i. If the Discharger submits, and the Executive Officer approves, the request in flow increase to the disposal ponds (Provision VI.C.2.b of this Order), the Discharger shall properly maintain the disposal ponds in accordance with the approved maintenance program submitted with the request.

**5. Special Provisions for Municipal Facilities (POTWs Only)**

a. **Pretreatment Requirements**

i. The Discharger shall be responsible and liable for the performance of all Control Authority pretreatment requirements contained in 40 CFR Part 403, including any subsequent regulatory revisions to 40 CFR Part 403. Where 40 CFR Part 403, or subsequent revision, places mandatory actions upon the Discharger as Control Authority but does not specify a timetable for completion of the actions, the Discharger shall complete the required actions within 6 months from the issuance date of this Order or the effective date of the 40 CFR Part 403 revisions, whichever comes later. For violations of pretreatment requirements, the Discharger shall be subject to enforcement actions, penalties, fines, and other remedies by U.S. EPA or other appropriate parties, as provided in the CWA. U.S. EPA may initiate enforcement action against a nondomestic user for noncompliance with applicable standards and requirements as provided in the CWA.

ii. The Discharger shall enforce the requirements promulgated under sections 307(b), 307(c), 307(d), and 402(b) of the CWA with timely, appropriate and effective enforcement actions. The Discharger shall cause all nondomestic users subject to federal categorical standards to achieve compliance no later than the date specified in those requirements or, in the case of a new nondomestic user, upon commencement of the discharge.

iii. The Discharger shall perform the pretreatment functions as required in 40 CFR Part 403 including, but not limited to:

(a) Implement the necessary legal authorities as provided in 40 CFR 403.8(f)(1);

(b) Enforce the pretreatment requirements under 40 CFR 403.5 and 403.6;

(c) Implement the programmatic functions as provided in 40 CFR 403.8(f)(2); and

(d) Provide the requisite funding and personnel to implement the pretreatment program as provided in 40 CFR 403.8(f)(3).

iv. **Pretreatment Reporting Requirements.** Pretreatment reporting requirements are included in the Monitoring and Reporting Program, Section X.C.4 of Attachment E – MRP.

b. **Sludge/Biosolids Treatment or Discharge Specifications.** Sludge in this document means the solid, semisolid, and liquid residues removed during primary, secondary, or advanced wastewater treatment processes. Solid waste refers to grit and screening material generated during preliminary treatment. Residual sludge means sludge that will not be subject to further treatment at the Facility. Biosolids refer to sludge that has been treated and tested and shown to be capable of being beneficially and legally used pursuant to federal and state regulations as a soil amendment for agricultural, silvicultural, horticultural, and land reclamation activities as specified under 40 CFR Part 503.

i. Collected screenings, residual sludge, biosolids, and other solids removed from liquid wastes shall be disposed of in a manner approved by the Executive Officer, and consistent with *Consolidated Regulations for Treatment, Storage, Processing, or Disposal of Solid Waste*, as set forth in Title 27, CCR, division 2, subdivision 1, section 20005, et seq. Removal for further treatment, storage, disposal, or reuse at sites (e.g., landfill, composting sites, soil amendment sites) that are operated in accordance with valid waste discharge requirements issued by a Regional Water Board will satisfy these specifications.

ii. Sludge and solid waste shall be removed from screens, sumps, ponds, clarifiers, etc. as needed to ensure optimal plant performance.

iii. The treatment of sludge generated at the Facility shall be confined to the Facility property and conducted in a manner that precludes infiltration of waste constituents into soils in a mass or concentration that will violate Groundwater Limitations V.B of this Order. In addition, the storage of residual sludge, solid waste, and biosolids on Facility property shall be temporary and controlled, and contained in a manner that minimizes leachate formation and precludes infiltration of waste constituents into soils in a mass or concentration that will violate Groundwater Limitations V.B of this Order.

iv. The use, disposal, storage, and transportation of biosolids shall comply with existing federal and state laws and regulations, including permitting requirements and technical standards included in 40 CFR Part 503. If the State Water Board and the Central Valley Water Board are given the authority to implement regulations contained in 40 CFR Part 503, this Order may be reopened to incorporate appropriate time schedules and technical standards. The Discharger must comply with the standards and time schedules contained in 40 CFR Part 503 whether or not they have been incorporated into this Order.

v. The Discharger shall comply with Section IX.A – Biosolids of the Monitoring and Reporting Program, Attachment E.

vi. Any proposed change in biosolids use or disposal practice from a previously approved practice shall be reported to the Executive Officer and U.S. EPA Regional Administrator at least **90 days** in advance of the change.

vii. By **<180 days of the permit effective date>**, the Discharger shall submit a biosolids use or disposal plan to the Central Valley Water Board. The plan shall describe at a minimum:

(a) Sources and amounts of biosolids generated annually.

(b) Location(s) of onsite storage and description of the containment area.

(c) Plans for ultimate disposal. For landfill disposal, include the present classification of the landfill; and the name and location of the landfill. For land application or composting, identify the name and location of the facility/area to which the biosolids are hauled to or applied.

(d) A description of the measures taken to ensure the integrity of the lined sludge drying beds is not compromised.

c. **Collection System.** On 2 May 2006, the State Water Board adopted State Water Board Order 2006-0003-DWQ, Statewide General WDRs for Sanitary Sewer Systems. The Discharger shall be subject to the requirements of Order 2006-0003-DWQ and any future revisions thereto. Order 2006-0003-DWQ requires that all public agencies that currently own or operate sanitary sewer systems apply for coverage under the general WDRs. The Discharger has applied for and has been approved for coverage under Order 2006-0003-DWQ for operation of its wastewater collection system.

d. **Facility Personnel**. The Discharger shall maintain adequate personnel at the Facility, which is a Class IV facility, in accordance with Title 23, CCR, section 3680. This includes an adequate number of operational staff with valid, unexpired, State Water Board-issued operator certificates of appropriate grade levels. **Within 10 days** following any change in Facility personnel that results in the Facility not being supervised by at least a Grade IV operator, or results in at least one-half of the wastewater treatment plant operators not possessing at least a Grade II wastewater operator certificate, the Discharger shall provide written notification to the Central Valley Water Board describing the measures it will take, along with an implementation schedule, to comply with Title 23, CCR, section 3680.

e. **Anaerobically Digestible Material.** If the Discharger proposes to receive hauled-in anaerobically digestible material for injection into an anaerobic digester for co-digestion, the Discharger shall notify the Central Valley Water Board and develop and implement standard operating procedures (SOPs) for this activity prior to initiation of the hauling. The SOPs shall address material handling, including unloading, screening, or other processing prior to anaerobic digestion, transportation, spill prevention, and spill response. In addition, the SOPs shall address avoidance of the introduction of materials that could cause interference, pass-through, or upset of the treatment processes; avoidance of prohibited material, vector control, odor control, operation and maintenance, and the disposition of any solid waste segregated from introduction to the digester. The Discharger shall provide training to its staff on the SOPs and shall maintain records for a minimum of three years for each load received, describing the hauler, waste type, and quantity received. In addition, the Discharger shall maintain records for a minimum of three years for the disposition, location, and quantity of accumulated pre-digestion-segregated solid waste hauled off-site.

**6. Other Special Provisions**

a. **Title 22, or Equivalent, Disinfection Requirements.** Wastewater discharged at Discharge Point 001 shall be oxidized, coagulated, filtered, and adequately disinfected pursuant to the California Department of Public Health (CDPH) reclamation criteria, CCR, Title 22, division 4, chapter 3, (Title 22), or equivalent.

b. **Discharge to Central Canal.** By **<permit expiration date>**, discharge to Central Canal during months when there are no irrigation water deliveries shall cease. The irrigation water delivery period each year is generally between April and September, but may vary from year to year. Discharge to Central Canal is not allowed when flow in the Canal

provides less than 20:1 dilution. The Discharger shall work with Fresno Irrigation District every year to determine when the irrigation water delivery period begins and ends. The Discharger shall certify annually in its Annual Report required in Section X.C.3 of Attachment E – MRP when the irrigation water delivery period began and ended.

c. This Order does not pre-empt or supersede the authority of local agencies to prohibit, restrict, or control the discharge of treated wastewater subject to their control. Discharges allowed by this Order to local irrigation or storm water collection and conveyance facilities must obtain approval from the agency responsible for operation and maintenance of the facilities.

d. Physical facilities shall be designed and constructed according to accepted engineering practice and shall be capable of full and consistent compliance with this Order when properly operated and maintained. Proper operation and maintenance shall be described in an Operation and Maintenance (O&M) manual prepared by the design engineer, a copy of which shall be kept at the Facility. The operation and maintenance manual shall be reviewed at least every time a significant change, alteration, or expansion is made to the Facility. The Discharger shall certify in every annual report whether the operation and maintenance manual is complete and reflective of the Facility, and whether operation, maintenance, and staffing for the year being reported was as prescribed in the O&M manual.

**7. Compliance Schedules – Not Applicable**

## VII. COMPLIANCE DETERMINATION

**A. $BOD_5$ and TSS Effluent Limitations (Section IV.B.1.a, IV.B.1.b, and IV.C.1.a).** Compliance with the final effluent limitations for $BOD_5$ and TSS required in Limitations and Discharge Requirements sections IV.B.1.a and IV.C.1.a shall be ascertained by 24-hour composite samples. Compliance with effluent limitations required in Limitations and Discharge Requirements section IV.B.1.b for percent removal shall be calculated using the arithmetic mean of $BOD_5$ and TSS in effluent samples collected over a monthly period at EFF-001 as a percentage of the arithmetic mean of the values for influent samples (at INF-001) collected at approximately the same times during the same period.

**B. Total Coliform Effluent Limitations (Section IV.B.1.e).** For each day that an effluent sample is collected and analyzed for total coliform at EFF-001, the 7-sample median shall be determined by calculating the median concentration of total coliform bacteria in the effluent utilizing the bacteriological results of the last seven (7) samples. If the 7-sample median of total coliform exceeds a most probable number (MPN) of 2.2 per 100 milliliters, the Discharger will be considered out of compliance.

**C. Mass Effluent Limitations.** The mass effluent limitations contained in the Final Effluent Limitations IV.B.1.a are based on the permitted flow at Discharge Point 001 and calculated as follows:

Mass (lbs/day) = Flow (mgd) × Concentration (mg/L) × 8.34 (conversion factor)

**D. Priority Pollutant Effluent Limitations.** Compliance with effluent limitations for priority pollutants shall be determined in accordance with Section 2.4.5 of the SIP, as follows:

1. The Discharger shall be deemed out of compliance with an effluent limitation, if the concentration of the priority pollutant in the monitoring sample is greater than the effluent limitation and greater than or equal to the reporting level (RL).

2. The Discharger shall be required to conduct a Pollutant Minimization Program (PMP) in accordance with section 2.4.5.1 of the SIP when there is evidence (e.g., sample results

reported as DNQ when the effluent limitation is less than the MDL, sample results from analytical methods more sensitive than those methods included in the permit in accordance with sections 2.4.2 or 2.4.3 of the SIP, presence of whole effluent toxicity, health advisories for fish consumption, results of benthic or aquatic organism tissue sampling) that the priority pollutant is present in the effluent above an effluent limitation and either:

a. A sample result is reported as detected, but not quantified (DNQ) and the effluent limitation is less than the RL in Attachment I of this Order; or

b. A sample result is reported as non-detect (ND) and the effluent limitation is less than the method detection limit (MDL).

3. When determining compliance with an average monthly effluent limitation (AMEL) and more than one sample result is available in a month, the Discharger shall compute the arithmetic mean unless the data set contains one or more reported determinations of DNQ or ND. In those cases, the Discharger shall compute the median in place of the arithmetic mean in accordance with the following procedure:

   a. The data set shall be ranked from low to high, reported ND determinations lowest, DNQ determinations next, followed by quantified values (if any). The order of the individual ND or DNQ determinations is unimportant.

   b. The median value of the data set shall be determined. If the data set has an odd number of data points, then the median is the middle value. If the data set has an even number of data points, then the median is the average of the two values around the middle unless one or both of the points are ND or DNQ, in which case the median value shall be the lower of the two data points where DNQ is lower than a quantified value and ND is lower than DNQ.

4. If a sample result, or the arithmetic mean or median of multiple sample results, is below the RL, and there is evidence that the priority pollutant is present in the effluent above an effluent limitation and the Discharger conducts a PMP (as described in section 2.4.5.1 of the SIP), the discharger shall <u>not</u> be deemed out of compliance.

**E. Chronic Whole Effluent Toxicity Effluent Limitation (Section IV.B.1.d).** Compliance with the accelerated monitoring and TRE provisions of Provision VI.C.2.a shall constitute compliance with the effluent limitation.

**F. Electrical Conductivity (Sections IV.B.1.f and IV.C.1.b).** Compliance with the electrical conductivity effluent limitations shall be determined monthly at monitoring locations EFF-001 and EFF-002 by comparing the 12-month rolling average of the effluent electrical conductivity data with 1,000 µmhos/cm and with the 12-month rolling flow-weighted electrical conductivity data submitted for the public water supply plus 500 µmhos/cm. When the Discharger only discharges at one discharge point during the month, compliance shall be determined at that discharge point. When the Discharger discharges at both discharge points during the month, compliance shall be determined separately at each discharge point.

# ATTACHMENT A – DEFINITIONS

**Arithmetic Mean ($\mu$)**
Also called the average, is the sum of measured values divided by the number of samples. For ambient water concentrations, the arithmetic mean is calculated as follows:

Arithmetic mean = $\mu = \Sigma x / n$ where: $\Sigma x$ is the sum of the measured ambient water concentrations, and n is the number of samples.

**Average Monthly Effluent Limitation (AMEL)**
The highest allowable average of daily discharges over a calendar month, calculated as the sum of all daily discharges measured during a calendar month divided by the number of daily discharges measured during that month.

**Average Weekly Effluent Limitation (AWEL)**
The highest allowable average of daily discharges over a calendar week (Sunday through Saturday), calculated as the sum of all daily discharges measured during a calendar week divided by the number of daily discharges measured during that week.

**Best Practicable Treatment or Control (BPTC)**
BPTC is a requirement of State Water Resources Control Board Resolution 68-16 – "Statement of Policy with Respect to Maintaining High Quality of Waters in California" (referred to as the "Antidegradation Policy"). BPTC is the treatment or control of a discharge necessary to assure that "*(a) a pollution or nuisance will not occur and (b) the highest water quality consistent with maximum benefit to the people of the State will be maintained.*" Pollution is defined in California Water Code section 13050(l). In general, an exceedance of a water quality objective in the Basin Plan constitutes "pollution".

**Bioaccumulative**
Those substances taken up by an organism from its surrounding medium through gill membranes, epithelial tissue, or from food and subsequently concentrated and retained in the body of the organism.

**Carcinogenic Pollutants**
Carcinogenic pollutants are substances that are known to cause cancer in living organisms.

**Coefficient of Variation (CV)**
CV is a measure of the data variability and is calculated as the estimated standard deviation divided by the arithmetic mean of the observed values.

**Daily Discharge**
Daily discharge is defined as either: (1) the total mass of the constituent discharged over the calendar day (12:00 am through 11:59 pm) or any 24-hour period that reasonably represents a calendar day for purposes of sampling (as specified in the permit), for a constituent with limitations expressed in units of mass or; (2) the unweighted arithmetic mean measurement of the constituent over the day for a constituent with limitations expressed in other units of measurement (e.g., concentration).

The daily discharge may be determined by the analytical results of a composite sample taken over the course of one day (a calendar day or other 24-hour period defined as a day) or by the arithmetic mean of analytical results from one or more grab samples taken over the course of the day.

For composite sampling, if 1 day is defined as a 24-hour period other than a calendar day, the analytical result for the 24-hour period will be considered as the result for the calendar day in which the 24-hour period ends.

**Detected, but Not Quantified (DNQ)**
DNQ are those sample results less than the RL, but greater than or equal to the laboratory's MDL. Sample results reported as DNQ are estimated concentrations.

**Dilution Credit**
Dilution credit is the amount of dilution granted to a discharge in the calculation of a water quality-based effluent limitation, based on the allowance of a specified mixing zone. It is calculated from the dilution ratio or determined through conducting a mixing zone study or modeling of the discharge and receiving water.

**Effluent Concentration Allowance (ECA)**
ECA is a value derived from the water quality criterion/objective, dilution credit, and ambient background concentration that is used, in conjunction with the coefficient of variation for the effluent monitoring data, to calculate a long-term average (LTA) discharge concentration. The ECA has the same meaning as waste load allocation (WLA) as used in U.S. EPA guidance (Technical Support Document For Water Quality-based Toxics Control, March 1991, second printing, EPA/505/2-90-001).

**Enclosed Bays**
Enclosed bays means indentations along the coast that enclose an area of oceanic water within distinct headlands or harbor works. Enclosed bays include all bays where the narrowest distance between the headlands or outermost harbor works is less than 75 percent of the greatest dimension of the enclosed portion of the bay. Enclosed bays include, but are not limited to, Humboldt Bay, Bodega Harbor, Tomales Bay, Drake's Estero, San Francisco Bay, Morro Bay, Los Angeles-Long Beach Harbor, Upper and Lower Newport Bay, Mission Bay, and San Diego Bay. Enclosed bays do not include inland surface waters or ocean waters.

**Estimated Chemical Concentration**
The estimated chemical concentration that results from the confirmed detection of the substance by the analytical method below the ML value. See "Detected, but Not Quantified (DNQ)."

**Estuaries**
Estuaries means waters, including coastal lagoons, located at the mouths of streams that serve as areas of mixing for fresh and ocean waters. Coastal lagoons and mouths of streams that are temporarily separated from the ocean by sandbars shall be considered estuaries. Estuarine waters shall be considered to extend from a bay or the open ocean to a point upstream where there is no significant mixing of fresh water and seawater. Estuarine waters include, but are not limited to, the Sacramento-San Joaquin Delta, as defined in Water Code section 12220, Suisun Bay, Carquinez Strait downstream to the Carquinez Bridge, and appropriate areas of the Smith, Mad, Eel, Noyo, Russian, Klamath, San Diego, and Otay rivers. Estuaries do not include inland surface waters or ocean waters.

**Inland Surface Waters**
All surface waters of the state that do not include the ocean, enclosed bays, or estuaries.

**Instantaneous Maximum Effluent Limitation**
The highest allowable value for any single grab sample or aliquot (i.e., each grab sample or aliquot is independently compared to the instantaneous maximum effluent limitation).

**Instantaneous Minimum Effluent Limitation**
The lowest allowable value for any single grab sample or aliquot (i.e., each grab sample or aliquot is independently compared to the instantaneous minimum effluent limitation).

**LC50**
The concentration of effluent that is lethal to 50% of the exposed test organisms, measured in a dilution series ranging from 100% effluent to 0% effluent.

**Lowest Observed Effect Concentration (LOEC)**
The lowest concentration of an effluent at which adverse effects are observed on an aquatic test organism.

**Maximum Daily Effluent Limitation (MDEL)**
The highest allowable daily discharge of a pollutant, over a calendar day (or 24-hour period). For pollutants with limitations expressed in units of mass, the daily discharge is calculated as the total mass of the pollutant discharged over the day. For pollutants with limitations expressed in other units of measurement, the daily discharge is calculated as the arithmetic mean measurement of the pollutant over the day.

**Median**
The middle measurement in a set of data. The median of a set of data is found by first arranging the measurements in order of magnitude (either increasing or decreasing order). If the number of measurements (n) is odd, then the median = $X_{(n+1)/2}$. If n is even, then the median = $(X_{n/2} + X_{(n/2)+1})/2$ (i.e., the midpoint between the n/2 and n/2+1).

**Method Detection Limit (MDL)**
MDL is the minimum concentration of a substance that can be measured and reported with 99 percent confidence that the analyte concentration is greater than zero, as defined in in 40 CFR part 136, Appendix B.

**Minimum Level (ML)**
ML is the concentration at which the entire analytical system must give a recognizable signal and acceptable calibration point. The ML is the concentration in a sample that is equivalent to the concentration of the lowest calibration standard analyzed by a specific analytical procedure, assuming that all the method specified sample weights, volumes, and processing steps have been followed.

**Mixing Zone**
Mixing zone is a limited volume of receiving water that is allocated for mixing with a wastewater discharge where water quality criteria can be exceeded without causing adverse effects to the overall water body.

**Not Detected (ND)**
Sample results that are less than the laboratory's MDL.

**Ocean Waters**
The territorial marine waters of the State as defined by California law to the extent these waters are outside of enclosed bays, estuaries, and coastal lagoons. Discharges to ocean waters are regulated in accordance with the State Water Board's California Ocean Plan.

**Persistent Pollutants**
Persistent pollutants are substances for which degradation or decomposition in the environment is nonexistent or very slow.

**Pollutant Minimization Program (PMP)**
PMP means waste minimization and pollution prevention actions that include, but are not limited to, product substitution, waste stream recycling, alternative waste management methods, and education of the public and businesses. The goal of the PMP shall be to reduce all potential sources of a priority pollutant(s) through pollutant minimization (control) strategies, including pollution prevention measures as appropriate, to maintain the effluent concentration at or below the water quality-based effluent limitation. Pollution prevention measures may be particularly appropriate for persistent bioaccumulative priority pollutants where there is evidence that beneficial uses are being impacted. The Central Valley Water Board may consider cost effectiveness when establishing the requirements of a PMP. The completion and implementation of a Pollution Prevention Plan, if required pursuant to Water Code section 13263.3, shall be considered to fulfill the PMP requirements.

**Pollution Prevention**
Pollution prevention means any action that causes a net reduction in the use or generation of a hazardous substance or other pollutant that is discharged into water and includes, but is not limited to,

input change, operational improvement, production process change, and product reformulation (as defined in Water Code section 13263.3). Pollution prevention does not include actions that merely shift a pollutant in wastewater from one environmental medium to another environmental medium, unless clear environmental benefits of such an approach are identified to the satisfaction of the State Water Board or Central Valley Water Board.

**Source of Drinking Water**
Any water designated as municipal or domestic supply (MUN) in a Central Valley Water Board Basin Plan.

**Standard Deviation ($\sigma$)**
Standard deviation is a measure of variability that is calculated as follows:

$$\sigma = (\sum[(x - \mu)^2]/(n - 1))^{0.5}$$

where:
$x$ is the observed value;
$\mu$ is the arithmetic mean of the observed values; and
$n$ is the number of samples.

**Toxicity Reduction Evaluation (TRE)**
TRE is a study conducted in a step-wise process designed to identify the causative agents of effluent or ambient toxicity, isolate the sources of toxicity, evaluate the effectiveness of toxicity control options, and then confirm the reduction in toxicity. The first steps of the TRE consist of the collection of data relevant to the toxicity, including additional toxicity testing, and an evaluation of facility operations and maintenance practices, and best management practices. A Toxicity Identification Evaluation (TIE) may be required as part of the TRE, if appropriate. A TIE is a set of procedures to identify the specific chemical(s) responsible for toxicity. These procedures are performed in three phases (characterization, identification, and confirmation) using aquatic organism toxicity tests.

**ATTACHMENT B – MAP**

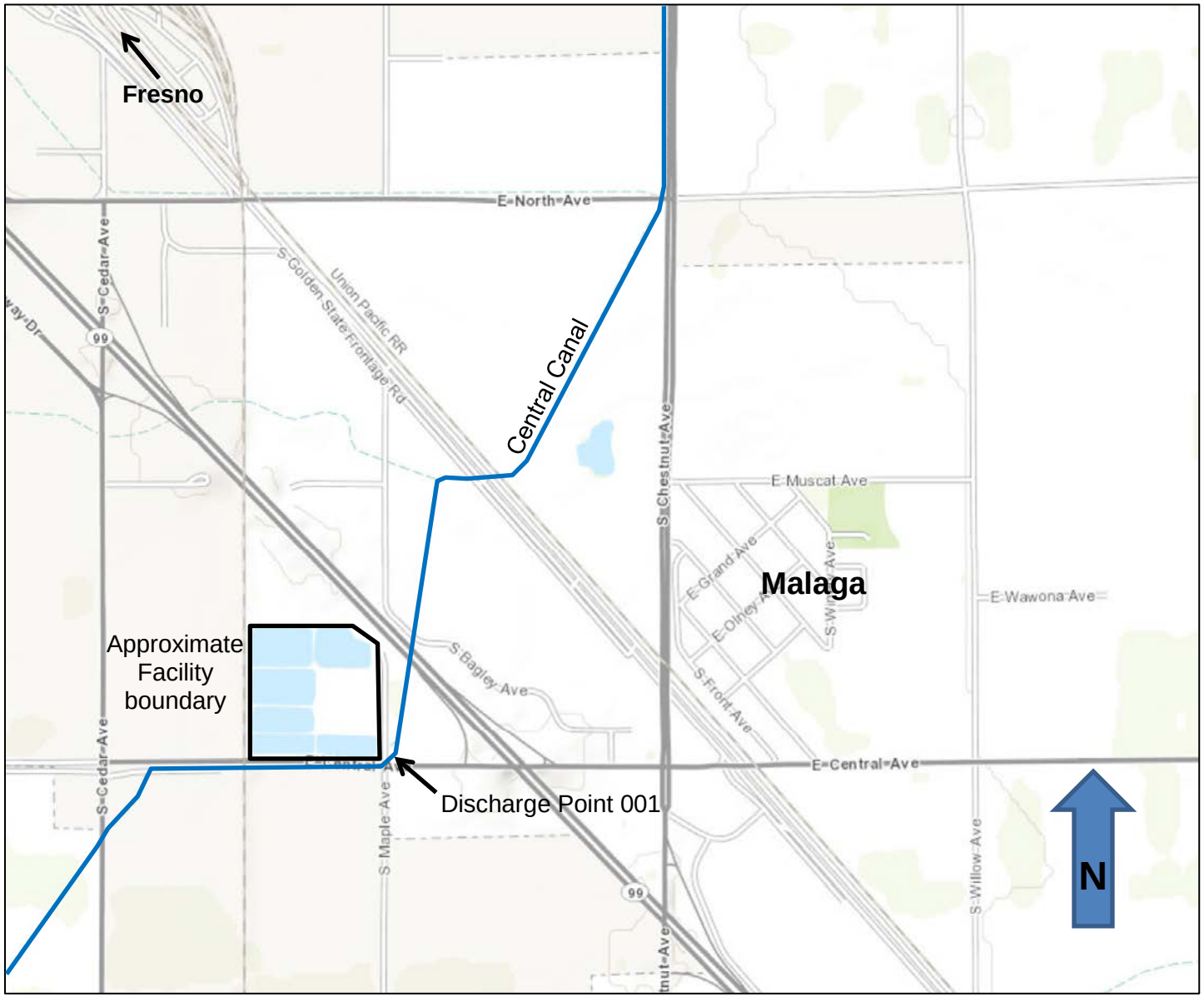

## ATTACHMENT C – FLOW SCHEMATIC

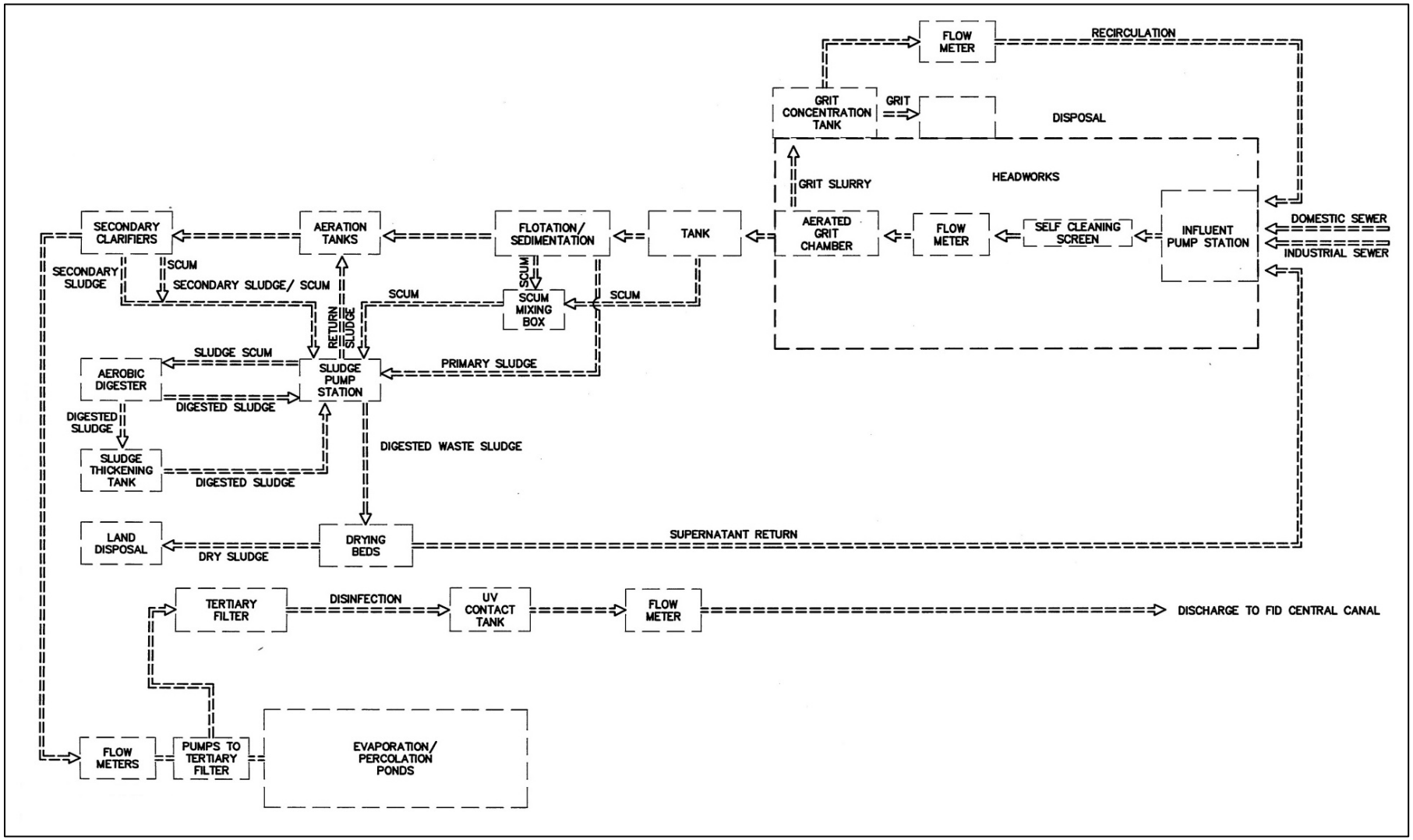

# ATTACHMENT D – STANDARD PROVISIONS

## I. STANDARD PROVISIONS – PERMIT COMPLIANCE

### A. Duty to Comply

1. The Discharger must comply with all of the terms, requirements, and conditions of this Order. Any noncompliance constitutes a violation of the Clean Water Act (CWA) and the California Water Code (Water Code) and is grounds for enforcement action, permit termination, revocation and reissuance, or modification; denial of a permit renewal application, or a combination thereof. (40 CFR 122.41(a); Water Code sections 13261, 13263, 13265, 13268, 13000, 13001, 13304, 13350, 13385.)

2. The Discharger shall comply with effluent standards or prohibitions established under Section 307(a) of the CWA for toxic pollutants and with standards for sewage sludge use or disposal established under Section 405(d) of the CWA within the time provided in the regulations that establish these standards or prohibitions, even if this Order has not yet been modified to incorporate the requirement. (40 CFR 122.41(a)(1).)

### B. Need to Halt or Reduce Activity Not a Defense

It shall not be a defense for a Discharger in an enforcement action that it would have been necessary to halt or reduce the permitted activity in order to maintain compliance with the conditions of this Order. (40 CFR 122.41(c).)

### C. Duty to Mitigate

The Discharger shall take all reasonable steps to minimize or prevent any discharge or sludge use or disposal in violation of this Order that has a reasonable likelihood of adversely affecting human health or the environment. (40 CFR 122.41(d).)

### D. Proper Operation and Maintenance

The Discharger shall at all times properly operate and maintain all facilities and systems of treatment and control (and related appurtenances) which are installed or used by the Discharger to achieve compliance with the conditions of this Order. Proper operation and maintenance also includes adequate laboratory controls and appropriate quality assurance procedures. This provision requires the operation of backup or auxiliary facilities or similar systems that are installed by a Discharger only when necessary to achieve compliance with the conditions of this Order. (40 CFR 122.41(e).)

### E. Property Rights

1. This Order does not convey any property rights of any sort or any exclusive privileges. (40 CFR 122.41(g).)

2. The issuance of this Order does not authorize any injury to persons or property or invasion of other private rights, or any infringement of state or local law or regulations. (40 CFR 122.5(c).)

### F. Inspection and Entry

The Discharger shall allow the Central Valley Regional Water Quality Control Board (Central Valley Water Board), State Water Resources Control Board (State Water Board), United States Environmental Protection Agency (U.S. EPA), and/or their authorized representatives (including an authorized contractor acting as their representative), upon the presentation of credentials and other documents, as may be required by law, to (33 U.S.C. § 1318(a)(4)(B); 40 CFR 122.41(i); Water Code section 13383):

1. Enter upon the Discharger's premises where a regulated facility or activity is located or conducted, or where records are kept under the conditions of this Order (33 U.S.C. § 1318(a)(4)(B)(ii); 40 CFR 122.41(i)(1); Water Code sections 13267, 13383);
2. Have access to and copy, at reasonable times, any records that must be kept under the conditions of this Order (33 U.S.C. § 1318(a)(4)(B)(ii); 40 CFR 122.41(i)(2); Water Code sections 13267, 13383);
3. Inspect and photograph, at reasonable times, any facilities, equipment (including monitoring and control equipment), practices, or operations regulated or required under this Order (33 U.S.C. § 1318(a)(4)(B)(ii); 40 CFR 122.41(i)(3); Water Code sections 13267, 13383); and
4. Sample or monitor, at reasonable times, for the purposes of assuring Order compliance or as otherwise authorized by the CWA or the Water Code, any substances or parameters at any location. (33 U.S.C. § 1318(a)(4)(B)(ii); 40 CFR 122.41(i)(4); Water Code sections 13267, 13383.)

**G. Bypass**

1. Definitions
   a. “Bypass” means the intentional diversion of waste streams from any portion of a treatment facility. (40 CFR 122.41(m)(1)(i).)
   b. “Severe property damage” means substantial physical damage to property, damage to the treatment facilities, which causes them to become inoperable, or substantial and permanent loss of natural resources that can reasonably be expected to occur in the absence of a bypass. Severe property damage does not mean economic loss caused by delays in production. (40 CFR 122.41(m)(1)(ii).)
2. Bypass not exceeding limitations. The Discharger may allow any bypass to occur which does not cause exceedances of effluent limitations, but only if it is for essential maintenance to assure efficient operation. These bypasses are not subject to the provisions listed in Standard Provisions – Permit Compliance I.G.3, I.G.4, and I.G.5 below. (40 CFR 122.41(m)(2).)
3. Prohibition of bypass. Bypass is prohibited, and the Central Valley Water Board may take enforcement action against a Discharger for bypass, unless (40 CFR 122.41(m)(4)(i)):
   a. Bypass was unavoidable to prevent loss of life, personal injury, or severe property damage (40 CFR 122.41(m)(4)(i)(A));
   b. There were no feasible alternatives to the bypass, such as the use of auxiliary treatment facilities, retention of untreated wastes, or maintenance during normal periods of equipment downtime. This condition is not satisfied if adequate back-up equipment should have been installed in the exercise of reasonable engineering judgment to prevent a bypass that occurred during normal periods of equipment downtime or preventive maintenance (40 CFR 122.41(m)(4)(i)(B)); and
   c. The Discharger submitted notice to the Central Valley Water Board as required under Standard Provisions – Permit Compliance I.G.5 below. (40 CFR 122.41(m)(4)(i)(C).)
4. The Central Valley Water Board may approve an anticipated bypass, after considering its adverse effects, if the Central Valley Water Board determines that it will meet the three conditions listed in Standard Provisions – Permit Compliance I.G.3 above. (40 CFR 122.41(m)(4)(ii).)

5. Notice

   a. Anticipated bypass. If the Discharger knows in advance of the need for a bypass, it shall submit a notice, if possible at least 10 days before the date of the bypass. (40 CFR 122.41(m)(3)(i).)

   b. Unanticipated bypass. The Discharger shall submit notice of an unanticipated bypass as required in Standard Provisions - Reporting V.E below (24-hour notice). (40 CFR 122.41(m)(3)(ii).)

### H. Upset

Upset means an exceptional incident in which there is unintentional and temporary noncompliance with technology based permit effluent limitations because of factors beyond the reasonable control of the Discharger. An upset does not include noncompliance to the extent caused by operational error, improperly designed treatment facilities, inadequate treatment facilities, lack of preventive maintenance, or careless or improper operation. (40 CFR 122.41(n)(1).)

1. Effect of an upset. An upset constitutes an affirmative defense to an action brought for noncompliance with such technology based permit effluent limitations if the requirements of Standard Provisions – Permit Compliance I.H.2 below are met. No determination made during administrative review of claims that noncompliance was caused by upset, and before an action for noncompliance, is final administrative action subject to judicial review. (40 CFR 122.41(n)(2).)

2. Conditions necessary for a demonstration of upset. A Discharger who wishes to establish the affirmative defense of upset shall demonstrate, through properly signed, contemporaneous operating logs or other relevant evidence that (40 CFR 122.41(n)(3)):

   a. An upset occurred and that the Discharger can identify the cause(s) of the upset (40 CFR 122.41(n)(3)(i));

   b. The permitted facility was, at the time, being properly operated (40 CFR 122.41(n)(3)(ii));

   c. The Discharger submitted notice of the upset as required in Standard Provisions – Reporting V.E.2.b below (24-hour notice) (40 CFR 122.41(n)(3)(iii)); and

   d. The Discharger complied with any remedial measures required under Standard Provisions – Permit Compliance I.C above. (40 CFR 122.41(n)(3)(iv).)

3. Burden of proof. In any enforcement proceeding, the Discharger seeking to establish the occurrence of an upset has the burden of proof. (40 CFR 122.41(n)(4).)

## II. STANDARD PROVISIONS – PERMIT ACTION

### A. General

This Order may be modified, revoked and reissued, or terminated for cause. The filing of a request by the Discharger for modification, revocation and reissuance, or termination, or a notification of planned changes or anticipated noncompliance does not stay any Order condition. (40 CFR 122.41(f).)

### B. Duty to Reapply

If the Discharger wishes to continue an activity regulated by this Order after the expiration date of this Order, the Discharger must apply for and obtain a new permit. (40 CFR 122.41(b).)

**C. Transfers**

This Order is not transferable to any person except after notice to the Central Valley Water Board. The Central Valley Water Board may require modification or revocation and reissuance of the Order to change the name of the Discharger and incorporate such other requirements as may be necessary under the CWA and the Water Code. (40 CFR 122.41(l)(3); 40 CFR 122.61.)

## III. STANDARD PROVISIONS – MONITORING

**A.** Samples and measurements taken for the purpose of monitoring shall be representative of the monitored activity. (40 CFR 122.41(j)(1).)

**B.** Monitoring results must be conducted according to test procedures under 40 CFR part 136 or, in the case of sludge use or disposal, approved under 40 CFR part 136 unless otherwise specified in 40 CFR part 503 unless other test procedures have been specified in this Order. (40 CFR 122.41(j)(4); 40 CFR 122.44(i)(1)(iv).)

## IV. STANDARD PROVISIONS – RECORDS

**A.** Except for records of monitoring information required by this Order related to the Discharger's sewage sludge use and disposal activities, which shall be retained for a period of at least five years (or longer as required by 40 CFR part 503), the Discharger shall retain records of all monitoring information, including all calibration and maintenance records and all original strip chart recordings for continuous monitoring instrumentation, copies of all reports required by this Order, and records of all data used to complete the application for this Order, for a period of at least three (3) years from the date of the sample, measurement, report or application. This period may be extended by request of the Central Valley Water Board Executive Officer at any time. (40 CFR 122.41(j)(2).)

**B.** Records of monitoring information shall include:

1. The date, exact place, and time of sampling or measurements (40 CFR 122.41(j)(3)(i));
2. The individual(s) who performed the sampling or measurements (40 CFR 122.41(j)(3)(ii));
3. The date(s) analyses were performed (40 CFR 122.41(j)(3)(iii));
4. The individual(s) who performed the analyses (40 CFR 122.41(j)(3)(iv));
5. The analytical techniques or methods used (40 CFR 122.41(j)(3)(v)); and
6. The results of such analyses. (40 CFR 122.41(j)(3)(vi).)

**C.** Claims of confidentiality for the following information will be denied (40 CFR 122.7(b)):

1. The name and address of any permit applicant or Discharger (40 CFR 122.7(b)(1)); and
2. Permit applications and attachments, permits and effluent data. (40 CFR 122.7(b)(2).)

## V. STANDARD PROVISIONS – REPORTING

**A. Duty to Provide Information**

The Discharger shall furnish to the Central Valley Water Board, State Water Board, or U.S. EPA within a reasonable time, any information which the Central Valley Water Board, State Water Board, or U.S. EPA may request to determine whether cause exists for modifying, revoking and reissuing, or terminating this Order or to determine compliance with this Order. Upon request, the Discharger shall also furnish to the Central Valley Water Board, State Water Board, or U.S. EPA copies of records required to be kept by this Order. (40 CFR 122.41(h); Water Code section 13267.)

**B. Signatory and Certification Requirements**

1. All applications, reports, or information submitted to the Central Valley Water Board, State Water Board, and/or U.S. EPA shall be signed and certified in accordance with Standard Provisions – Reporting V.B.2, V.B.3, V.B.4, and V.B.5 below. (40 CFR 122.41(k).)

2. All permit applications shall be signed by either a principal executive officer or ranking elected official. For purposes of this provision, a principal executive officer of a federal agency includes: (i) the chief executive officer of the agency, or (ii) a senior executive officer having responsibility for the overall operations of a principal geographic unit of the agency (e.g., Regional Administrators of U.S. EPA). (40 CFR 122.22(a)(3).).

3. All reports required by this Order and other information requested by the Central Valley Water Board, State Water Board, or U.S. EPA shall be signed by a person described in Standard Provisions – Reporting V.B.2 above, or by a duly authorized representative of that person. A person is a duly authorized representative only if:

   a. The authorization is made in writing by a person described in Standard Provisions – Reporting V.B.2 above (40 CFR 122.22(b)(1));

   b. The authorization specifies either an individual or a position having responsibility for the overall operation of the regulated facility or activity such as the position of plant manager, operator of a well or a well field, superintendent, position of equivalent responsibility, or an individual or position having overall responsibility for environmental matters for the company. (A duly authorized representative may thus be either a named individual or any individual occupying a named position.) (40 CFR 122.22(b)(2)); and

   c. The written authorization is submitted to the Central Valley Water Board and State Water Board. (40 CFR 122.22(b)(3).)

4. If an authorization under Standard Provisions – Reporting V.B.3 above is no longer accurate because a different individual or position has responsibility for the overall operation of the facility, a new authorization satisfying the requirements of Standard Provisions – Reporting V.B.3 above must be submitted to the Central Valley Water Board and State Water Board prior to or together with any reports, information, or applications, to be signed by an authorized representative. (40 CFR 122.22(c).)

5. Any person signing a document under Standard Provisions – Reporting V.B.2 or V.B.3 above shall make the following certification:

   "*I certify under penalty of law that this document and all attachments were prepared under my direction or supervision in accordance with a system designed to assure that qualified personnel properly gather and evaluate the information submitted. Based on my inquiry of the person or persons who manage the system, or those persons directly responsible for gathering the information, the information submitted is, to the best of my knowledge and belief, true, accurate, and complete. I am aware that there are significant penalties for submitting false information, including the possibility of fine and imprisonment for knowing violations.*" (40 CFR 122.22(d).)

**C. Monitoring Reports**

1. Monitoring results shall be reported at the intervals specified in the Monitoring and Reporting Program (Attachment E) in this Order. (40 CFR 122.41(l)(4).)

2. Monitoring results must be reported on a Discharge Monitoring Report (DMR) form or forms provided or specified by the Central Valley Water Board or State Water Board for reporting results of monitoring of sludge use or disposal practices. (40 CFR 122.41(l)(4)(i).)

3. If the Discharger monitors any pollutant more frequently than required by this Order using test procedures approved under 40 CFR part 136, or another method required for an industry-specific waste stream under 40 CFR subchapters N or O, the results of such monitoring shall be included in the calculation and reporting of the data submitted in the DMR or sludge reporting form specified by the Central Valley Water Board. (40 CFR 122.41(l)(4)(ii).)

4. Calculations for all limitations, which require averaging of measurements, shall utilize an arithmetic mean unless otherwise specified in this Order. (40 CFR 122.41(l)(4)(iii).)

**D. Compliance Schedules**

Reports of compliance or noncompliance with, or any progress reports on, interim and final requirements contained in any compliance schedule of this Order, shall be submitted no later than 14 days following each schedule date. (40 CFR 122.41(l)(5).)

**E. Twenty-Four Hour Reporting**

1. The Discharger shall report any noncompliance that may endanger health or the environment. Any information shall be provided orally within 24 hours from the time the Discharger becomes aware of the circumstances. A written submission shall also be provided within five (5) days of the time the Discharger becomes aware of the circumstances. The written submission shall contain a description of the noncompliance and its cause; the period of noncompliance, including exact dates and times, and if the noncompliance has not been corrected, the anticipated time it is expected to continue; and steps taken or planned to reduce, eliminate, and prevent reoccurrence of the noncompliance. (40 CFR 122.41(l)(6)(i).)

2. The following shall be included as information that must be reported within 24 hours under this paragraph (40 CFR 122.41(l)(6)(ii)):

   a. Any unanticipated bypass that exceeds any effluent limitation in this Order. (40 CFR 122.41(l)(6)(ii)(A).)

   b. Any upset that exceeds any effluent limitation in this Order. (40 CFR 122.41(l)(6)(ii)(B).)

3. The Central Valley Water Board may waive the above-required written report under this provision on a case-by-case basis if an oral report has been received within 24 hours. (40 CFR 122.41(l)(6)(iii).)

**F. Planned Changes**

The Discharger shall give notice to the Central Valley Water Board as soon as possible of any planned physical alterations or additions to the permitted facility. Notice is required under this provision only when (40 CFR 122.41(l)(1)):

1. The alteration or addition to a permitted facility may meet one of the criteria for determining whether a facility is a new source in section 122.29(b) (40 CFR 122.41(l)(1)(i)); or

2. The alteration or addition could significantly change the nature or increase the quantity of pollutants discharged. This notification applies to pollutants that are not subject to effluent limitations in this Order. (40 CFR 122.41(l)(1)(ii).)

3. The alteration or addition results in a significant change in the Discharger's sludge use or disposal practices, and such alteration, addition, or change may justify the application of permit conditions that are different from or absent in the existing permit, including notification of additional use or disposal sites not reported during the permit application process or not reported pursuant to an approved land application plan. (40 CFR 122.41(l)(1)(iii).)

### G. Anticipated Noncompliance

The Discharger shall give advance notice to the Central Valley Water Board or State Water Board of any planned changes in the permitted facility or activity that may result in noncompliance with this Order's requirements. (40 CFR 122.41(l)(2).)

### H. Other Noncompliance

The Discharger shall report all instances of noncompliance not reported under Standard Provisions – Reporting V.C, V.D, and V.E above at the time monitoring reports are submitted. The reports shall contain the information listed in Standard Provision – Reporting V.E above. (40 CFR 122.41(l)(7).)

### I. Other Information

When the Discharger becomes aware that it failed to submit any relevant facts in a permit application, or submitted incorrect information in a permit application or in any report to the Central Valley Water Board, State Water Board, or U.S. EPA, the Discharger shall promptly submit such facts or information. (40 CFR 122.41(l)(8).)

## VI. STANDARD PROVISIONS – ENFORCEMENT

**A.** The Central Valley Water Board is authorized to enforce the terms of this permit under several provisions of the Water Code, including, but not limited to, sections 13385, 13386, and 13387.

## VII. ADDITIONAL PROVISIONS – NOTIFICATION LEVELS

### A. Publicly-Owned Treatment Works (POTWs)

All POTWs shall provide adequate notice to the Central Valley Water Board of the following (40 CFR 122.42(b)):

1. Any new introduction of pollutants into the POTW from an indirect discharger that would be subject to sections 301 or 306 of the CWA if it were directly discharging those pollutants (40 CFR 122.42(b)(1)); and
2. Any substantial change in the volume or character of pollutants being introduced into that POTW by a source introducing pollutants into the POTW at the time of adoption of the Order. (40 CFR 122.42(b)(2).)
3. Adequate notice shall include information on the quality and quantity of effluent introduced into the POTW as well as any anticipated impact of the change on the quantity or quality of effluent to be discharged from the POTW. (40 CFR 122.42(b)(3).)

# ATTACHMENT E – MONITORING AND REPORTING PROGRAM

## Contents

I. GENERAL MONITORING PROVISIONS ..... E-2
II. MONITORING LOCATIONS ..... E-3
III. INFLUENT MONITORING REQUIREMENTS ..... E-3
A. MONITORING LOCATION INF-001 ..... E-3
IV. EFFLUENT MONITORING REQUIREMENTS ..... E-4
A. MONITORING LOCATION EFF-001 ..... E-4
V. WHOLE EFFLUENT TOXICITY TESTING REQUIREMENTS ..... E-6
VI. LAND DISCHARGE MONITORING REQUIREMENTS ..... E-8
A. MONITORING LOCATION EFF-002 ..... E-8
VII. RECYCLING MONITORING REQUIREMENTS – NOT APPLICABLE ..... E-8
VIII. RECEIVING WATER MONITORING REQUIREMENTS ..... E-9
A. MONITORING LOCATIONS RSW-001 AND RSW-002 ..... E-9
B. MONITORING LOCATION GW-00*N* ..... E-10
IX. OTHER MONITORING REQUIREMENTS ..... E-11
A. BIOSOLIDS ..... E-11
B. MUNICIPAL WATER SUPPLY ..... E-11
C. FILTRATION SYSTEM MONITORING ..... E-11
D. ULTRAVIOLET LIGHT (UV) DISINFECTION SYSTEM ..... E-12
X. REPORTING REQUIREMENTS ..... E-13
A. GENERAL MONITORING AND REPORTING REQUIREMENTS ..... E-13
B. SELF-MONITORING REPORTS (SMRS) AND DISCHARGE MONITORING REPORTS (DMRS) ..... E-13
C. OTHER REPORTS ..... E-16

## Tables

TABLE E-1. MONITORING STATION LOCATIONS ..... E-3
TABLE E-2. INFLUENT MONITORING ..... E-3
TABLE E-3. EFFLUENT MONITORING ..... E-4
TABLE E-4. CHRONIC TOXICITY TESTING DILUTION SERIES ..... E-7
TABLE E-5. LAND DISCHARGE MONITORING REQUIREMENTS ..... E-8
TABLE E-6. RECEIVING WATER MONITORING REQUIREMENTS – RSW-001 AND RSW-002 ..... E-9
TABLE E-7. GROUNDWATER MONITORING REQUIREMENTS ..... E-10
TABLE E-8. MUNICIPAL WATER SUPPLY MONITORING REQUIREMENTS ..... E-11
TABLE E-9. FILTRATION SYSTEM MONITORING REQUIREMENTS – FIL-001 ..... E-11
TABLE E-10. FILTRATION SYSTEM MONITORING REQUIREMENTS – FIL-002 ..... E-12
TABLE E-11. ULTRAVIOLET LIGHT DISINFECTION SYSTEM MONITORING REQUIREMENTS ..... E-12
TABLE E-12. MONITORING PERIODS AND REPORTING SCHEDULE ..... E-13

## ATTACHMENT E – MONITORING AND REPORTING PROGRAM (MRP)

Title 40 of the Code of Federal Regulations, section 122.48 (40 CFR 122.48) requires that all NPDES permits specify monitoring and reporting requirements. California Water Code (Water Code) sections 13267 and 13383 also authorize the Central Valley Regional Water Quality Control Board (Central Valley Water Board) to require technical and monitoring reports. This MRP establishes monitoring and reporting requirements that implement federal and California regulations.

### I. GENERAL MONITORING PROVISIONS

**A.** Samples and measurements taken as required herein shall be representative of the volume and nature of the monitored discharge. All samples shall be taken at the monitoring locations specified below and, unless otherwise specified, before the monitored flow joins or is diluted by any other waste stream, body of water, or substance. Monitoring locations shall not be changed without notification to and the approval of the Central Valley Water Board.

**B.** Effluent samples shall be taken downstream of the last addition of wastes to the treatment or discharge works where a representative sample may be obtained prior to mixing with the receiving waters. Samples shall be collected at such a point and in such a manner to ensure a representative sample of the discharge.

**C.** Chemical, bacteriological, and bioassay analyses of any material required by this Order shall be conducted by a laboratory certified for such analyses by the State Water Resources Control Board (State Water Board). Laboratories that perform sample analyses must be identified in all monitoring reports submitted to the Central Valley Water Board. In the event a certified laboratory is not available to the Discharger for any onsite field measurements such as pH, dissolved oxygen (DO), turbidity, and temperature, such analyses performed by a noncertified laboratory will be accepted provided a Quality Assurance-Quality Control Program is instituted by the laboratory. A manual containing the steps followed in this program for any onsite field measurements such as pH, DO, turbidity, and temperature must be kept onsite in the Facility laboratory and shall be available for inspection by Central Valley Water Board staff, State Water Board staff, United States Environmental Protection Agency (U.S. EPA) staff, and/or their authorized representatives. The Discharger must demonstrate sufficient capability (qualified and trained employees, properly calibrated and maintained field instruments, etc.) to adequately perform these field measurements. The Quality Assurance-Quality Control Program must conform to U.S. EPA guidelines or to procedures approved by the Central Valley Water Board.

**D.** Appropriate flow measurement devices and methods consistent with accepted scientific practices shall be selected and used to ensure the accuracy and reliability of measurements of the volume of monitored discharges. All monitoring instruments and devices used by the Discharger to fulfill the prescribed monitoring program shall be properly maintained and calibrated as necessary, at least yearly, to ensure their continued accuracy. All flow measurement devices shall be calibrated at least once per year to ensure continued accuracy of the devices.

**E.** Monitoring results, including noncompliance, shall be reported at intervals and in a manner specified in this Monitoring and Reporting Program.

**F.** Laboratories analyzing monitoring samples shall be certified by the State Water Board, in accordance with the provision of Water Code section 13176, and must include quality assurance/quality control data with their reports.

**G.** The Discharger shall ensure that the results of the Discharge Monitoring Report-Quality Assurance (DMR-QA) Study or the most recent Water Pollution Performance Evaluation Study are submitted annually to the State Water Board at the following address:

State Water Resources Control Board Quality Assurance Program Officer
Office of Information Management and Analysis
State Water Resources Control Board
1001 I Street
Sacramento, CA 95814

**H.** The Discharger shall file with the Central Valley Water Board technical reports on self-monitoring performed according to the detailed specifications contained in this Monitoring and Reporting Program.

**I.** The results of all monitoring required by this Order shall be reported to the Central Valley Water Board, and shall be submitted in such a format as to allow direct comparison with the limitations and requirements of this Order. Unless otherwise specified, discharge flows shall be reported in terms of the monthly average and the daily maximum discharge flows at each location.

## II. MONITORING LOCATIONS

The Discharger shall monitor the following locations to demonstrate compliance with the effluent limitations, discharge specifications, and other requirements in this Order:

**Table E-1. Monitoring Station Locations**

| Discharge Point Name | Monitoring Location Name | Monitoring Location Description |
|---|---|---|
| -- | INF-001 | Influent stream prior to any treatment or return flows |
| 001 | EFF-001 | Disinfected tertiary effluent to Central Canal, after the last addition of wastes (36° 40’ 41.52” N, 119° 44’ 43.98” W) |
| 002 | EFF-002 | Un-disinfected secondary effluent to the onsite disposal ponds, after the last addition of wastes |
| -- | RSW-001 | Central Canal, approximately 600 feet upstream of Discharge Point 001 (36° 40’ 46.416” N, 119° 44’ 42.468” W) |
| -- | RSW-002 | Central Canal, approximately 600 feet downstream of Discharge Point 001 (36° 40’ 40.08” N, 119° 44’ 49.632” W) |
| -- | SPL-001 | Public water supply for the area served by the Facility |
| -- | G-00*n* | Groundwater monitoring wells |
| -- | BIO-001 | Biosolids at the sludge drying beds, before removal for storage or disposal |
| -- | PND-001 through PND-008 | Onsite disposal ponds |
| -- | FIL-001 | A location where a representative sample of the influent to the filtration system can be obtained. |
| -- | FIL-002 | A location where a representative sample of the effluent from the filtration system, prior to disinfection, can be obtained. |
| -- | UVS-001 | Ultraviolet light disinfection system |

The latitude and longitude values in Table E-1, above, are approximate for administrative purposes.

## III. INFLUENT MONITORING REQUIREMENTS

### A. Monitoring Location INF-001

1. The Discharger shall monitor influent to the Facility at INF-001, as follows:

**Table E-2. Influent Monitoring**

| Parameter | Units | Sample Type | Minimum Sampling Frequency | Required Analytical Test Method |
|---|---|---|---|---|
| Flow | mgd | Meter | Continuous | -- |

| Parameter | Units | Sample Type | Minimum Sampling Frequency | Required Analytical Test Method |
|---|---|---|---|---|
| Biochemical Oxygen Demand (BOD) (5-day @ 20°C) | mg/L | Composite[1] | 1/Week | [2] |
| Total Suspended Solids | mg/L | Composite[1] | 1/Week | [2] |
| pH | standard units | Grab[3] | 1/Week | [2,4,5] |
| Oil and Grease | mg/L | Grab[3] | 1/Month | [2] |
| Electrical Conductivity @ 25°C | µmhos/cm | Grab[3] | 1/Week | [2] |

[1] Composite samples shall be 24-hour, flow-proportional composites.
[2] Pollutants shall be analyzed using the analytical methods described in 40 CFR Part 136; or by methods approved by the Central Valley Water Board or the State Water Board.
[3] Grab samples shall not be collected at the same time each day to get a complete representation of variations in the influent.
[4] A hand-held field meter may be used, provided the meter utilizes a U.S. EPA-approved algorithm/method and is calibrated and maintained in accordance with the manufacturer's instructions. A calibration and maintenance log for each meter used for monitoring required by this Monitoring and Reporting Program shall be maintained at the Facility.
[5] pH samples must be analyzed within 15 minutes of sample collection, in accordance with 40 CFR Part 136.

## IV. EFFLUENT MONITORING REQUIREMENTS

### A. Monitoring Location EFF-001

1. The Discharger shall monitor disinfected, tertiary-treated effluent to Central Canal at EFF-001, as follows. If the discharge is intermittent, rather than continuous, then on the first day of each such intermittent discharge, the Discharger shall monitor and record data for all of the constituents listed in Table E-3, after which the frequencies of analysis given in the schedule shall apply for the duration of each such intermittent discharge. In no event shall the Discharger be required to monitor and record data more often than twice the frequencies listed in Table E-3.

**Table E-3. Effluent Monitoring**

| Parameter | Units | Sample Type | Minimum Sampling Frequency | Required Analytical Test Method |
|---|---|---|---|---|
| Flow | mgd | Meter | Continuous | -- |
| ***Conventional Pollutants*** | | | | |
| Biochemical Oxygen Demand (BOD) (5-day @ 20°C) | mg/L | Composite[1] | 1/Week | [2] |
| | lbs/day | Calculate | 1/Week | -- |
| | % removal | Calculate | 1/Month | -- |
| Total Suspended Solids | mg/L | Composite[1] | 1/Week | [2] |
| | lbs/day | Calculate | 1/Week | -- |
| | % removal | Calculate | 1/Month | -- |
| pH | standard units | Grab | 1/Day[3] | [2,4,14] |
| ***Priority Pollutants*** | | | | |
| Copper, Total Recoverable | µg/L | Composite[1] | 1/Month[11] | [2,9] |
| Cyanide, Total (as CN) | µg/L | Grab | 1/Month | [2,9] |
| Priority Pollutants | vary | Grab/ Composite[1,5] | 1/Year[6,11] | [2,7,8,9] |
| ***Non-Conventional Pollutants*** | | | | |
| Aluminum, Total Recoverable | µg/L | Composite[1] | 1/Month | [2] |
| Ammonia Nitrogen, Total (as N) | mg/L | Grab | 1/Month[3] | [2] |

| Parameter | Units | Sample Type | Minimum Sampling Frequency | Required Analytical Test Method |
|---|---|---|---|---|
| Ammonia, un-ionized (as N) | mg/L | Calculate | 1/Month | -- |
| Boron | mg/L | Composite[1] | 1/Month | [2] |
| Chloride | mg/L | Composite[1] | 1/Month | [2] |
| Electrical Conductivity @ 25°C | µmhos/cm | Grab | 1/Day | [2] |
| Fluoride | mg/L | Composite[1] | 1/Month | [2] |
| General Minerals[10] | mg/L | Composite[1] | 1/Year | [2] |
| Hardness (as $CaCO_3$) | mg/L | Composite[1] | 1/Month[11] | [2] |
| Nitrate Nitrogen, Total (as N) | mg/L | Grab | 1/Month[12] | [2] |
| Nitrite Nitrogen, Total (as N) | mg/L | Grab | 1/Month[12] | [2] |
| Oil and Grease | mg/L | Grab | 1/Month | [2] |
| Temperature | °C/°F | Grab | 1/Day[3] | [2,4,14] |
| Total Coliform | MPN/100 mL | Grab | 1/Week[13] | [2] |
| Total Dissolved Solids | mg/L | Composite[1] | 1/Month | [2] |
| Total Kjeldahl Nitrogen | mg/L | Grab | 1/Month | [2] |
| Total Nitrogen | mg/L | Calculate | 1/Month | -- |
| Whole Effluent Toxicity (see Section V. below) | -- | -- | -- | -- |

[1] Composite samples shall be 24-hour, flow-proportional composites.

[2] Pollutants shall be analyzed using the analytical methods described in 40 CFR Part 136 or by methods approved by the Central Valley Water Board or the State Water Board.

[3] pH and temperature shall be recorded at the time of ammonia sample collection.

[4] A hand-held field meter may be used, provided the meter utilizes a U.S. EPA-approved algorithm/method and is calibrated and maintained in accordance with the manufacturer's instructions. A calibration and maintenance log for each meter used for monitoring required by this Monitoring and Reporting Program shall be maintained at the Facility.

[5] Volatile constituents shall be sampled in accordance with 40 CFR Part 136 or by methods approved by the Central Valley Water Board or the State Water Board.

[6] Concurrent with receiving surface water priority pollutant sampling.

[7] In order to verify if bis(2-ethylhexyl)phthalate is truly present in the effluent discharge, the Discharger shall take steps to ensure that sample containers, sampling apparatus, and analytical equipment are not sources of the detected contaminant.

[8] Total recoverable mercury samples shall be collected using clean hands/dirty hands procedures, as described in U.S. EPA method 1669: *Sampling Ambient Water for Trace Metals at EPA Water Quality Criteria Levels*, for collection of equipment blanks (section 9.4.4.2), and shall be analyzed by U.S. EPA method 1630/1631 (Revision E) with a reporting limit of 0.5 ng/L for total recoverable mercury.

[9] Reporting levels shall be equal to the reporting levels specified in Attachment I of this Order. If more than one analytical test method and reporting level is listed for a given parameter in Attachment I, the Discharger may select from the listed methods and corresponding reporting level.

[10] General minerals shall include the following: boron, calcium, iron, magnesium, potassium, sodium, chloride, manganese, phosphorus, total alkalinity (including alkalinity series), and hardness, and include verification that the analysis is complete (i.e., cation/anion balance).

[11] Hardness samples shall be collected concurrently with metals samples.

[12] Monitoring for nitrite and nitrate shall be conducted concurrently.

[13] Samples for total coliform may be collected at any point following disinfection.

[14] pH samples must be analyzed within 15 minutes of sample collection, and temperature must be analyzed immediately, in accordance with 40 CFR Part 136.

## V. WHOLE EFFLUENT TOXICITY TESTING REQUIREMENTS

**A. Acute Toxicity Testing.** The Discharger shall conduct acute toxicity testing to determine whether the effluent is contributing acute toxicity to the receiving water. The Discharger shall meet the following acute toxicity testing requirements:

1. *Monitoring Frequency* – The Discharger shall perform **semi-annual (2/year)** acute toxicity testing.
2. *Sample Types* – The samples shall be flow proportional 24-hour composites and shall be representative of the volume and quality of the discharge. The effluent samples shall be taken at the effluent monitoring location EFF-001.
3. *Test Species* – Test species shall be fathead minnows (*Pimephales promelas*).
4. *Test Type and Duration* – Test type shall be static renewal, and the test duration shall be 96 hours.
5. *Dilutions* – The acute toxicity testing shall be performed using undiluted effluent.
6. *Test Methods* – The acute toxicity testing samples shall be analyzed using *Methods for Measuring the Acute Toxicity of Effluents and Receiving Waters to Freshwater and Marine Organisms*, Fifth Edition, October 2002, EPA-821-R-02-012 (Method Manual). Temperature and pH shall be recorded at the time of sample collection. No pH adjustment may be made unless approved by the Executive Officer.
7. *Test Failure* – If an acute toxicity test does not meet all test acceptability criteria, as specified in the test method, the Discharger must re-sample and re-test as soon as possible, not to exceed 7 days following notification of test failure.

**B. Chronic Toxicity Testing.** The Discharger shall conduct three species chronic toxicity testing to determine whether the effluent is contributing chronic toxicity to the receiving water. The Discharger shall meet the following chronic toxicity testing requirements:

1. *Monitoring Frequency* – The Discharger shall perform **quarterly (1/quarter)** three species chronic toxicity testing.
2. *Sample Types* – Effluent samples shall be flow proportional 24-hour composites and shall be representative of the volume and quality of the discharge. The effluent samples shall be taken at the effluent monitoring location EFF-001.
3. *Sample Volumes* – Adequate sample volumes shall be collected to provide renewal water to complete the test in the event that the discharge is intermittent.
4. *Test Species* – Chronic toxicity testing measures sublethal (e.g., reduced growth, reproduction) and/or lethal effects to test organisms exposed to an effluent compared to that of the control organisms. The Discharger shall conduct chronic toxicity tests with:
   a. The cladoceran, water flea, *Ceriodaphnia dubia* (survival and reproduction test);
   b. The fathead minnow, *Pimephales promelas* (larval survival and growth test); and
   c. The green alga, *Selenastrum capricornutum* (growth test).
5. *Test Methods* – The presence of chronic toxicity shall be estimated as specified in *Short-term Methods for Estimating the Chronic Toxicity of Effluents and Receiving Waters to Freshwater Organisms*, Fourth Edition, October 2002, EPA/821-R-02-013 (Method Manual).
6. *Reference Toxicant* – As required by the SIP, all chronic toxicity tests shall be conducted with concurrent testing with a reference toxicant and shall be reported with the chronic toxicity test results.

7. *Dilutions* – For routine and accelerated chronic toxicity monitoring, it is not necessary to perform the test using a dilution series. The test may be performed using 100% effluent and one control. For TRE monitoring, the chronic toxicity testing shall be performed using the dilution series identified in Table E-4, below, unless an alternative dilution series is detailed in the submitted TRE Action Plan. Laboratory water control may be used as the diluent.

**Table E-4. Chronic Toxicity Testing Dilution Series**

| Sample | Dilutions (%) | | | | | Control |
|---|---|---|---|---|---|---|
| | 100 | 75 | 50 | 25 | 12.5 | |
| % Effluent | 100 | 75 | 50 | 25 | 12.5 | 0 |
| % Laboratory Water | 0 | 25 | 50 | 75 | 87.5 | 100 |

8. *Test Failure* – The Discharger must re-sample and re-test as soon as possible, but no later than fourteen (14) days after receiving notification of a test failure. A test failure is defined as follows:

   a. The reference toxicant test or the effluent test does not meet all test acceptability criteria as specified in the Method Manual, and its subsequent amendments or revisions; or

   b. The percent minimum significant difference (PMSD) measured for the test exceeds the upper PMSD bound variability criterion in Table 6 on page 52 of the Method Manual. (A retest is only required in this case if the test results do not exceed the monitoring trigger specified in Special Provision VI.C.2.a.iii of this Order.)

**C. WET Testing Notification Requirements.** The Discharger shall notify the Central Valley Water Board within 24 hours after the receipt of test results exceeding the monitoring trigger during regular or accelerated monitoring, or an exceedance of an acute toxicity effluent limitation.

**D. WET Testing Reporting Requirements.** All toxicity test reports shall include the contracting laboratory's complete report provided to the Discharger and shall be in accordance with the appropriate "Report Preparation and Test Review" sections of the method manuals. At a minimum, whole effluent toxicity monitoring shall be reported as follows:

1. **Chronic WET Reporting.** Regular chronic toxicity monitoring results shall be reported to the Central Valley Water Board **quarterly (1/quarter)**, and shall contain, at minimum:

   a. The dates of sample collection and initiation of each toxicity test; and

   b. The results compared to the numeric toxicity monitoring trigger.

   Additionally, the monthly discharger self-monitoring reports shall contain an updated chronology of chronic toxicity test results expressed in TUc, and organized by test species, type of test (survival, growth or reproduction), and monitoring frequency, i.e., either quarterly, monthly, accelerated, or Toxicity Reduction Evaluation (TRE).

2. **Acute WET Reporting.** Acute toxicity test results shall be submitted **with the monthly discharger self-monitoring reports** and reported as percent survival.

3. **TRE Reporting.** Reports for TREs shall be submitted in accordance with the schedule contained in the Discharger's approved TRE Work Plan, or as amended by the Discharger's TRE Action Plan.

4. **Quality Assurance (QA).** The Discharger must provide the following information for QA purposes:

a. Results of the applicable reference toxicant data with the statistical output page giving the species, NOEC, LOEC, type of toxicant, dilution water used, concentrations used, PMSD, and dates tested.

b. The reference toxicant control charts for each endpoint, which include summaries of reference toxicant tests performed by the contracting laboratory.

c. Any information on deviations or problems encountered and how they were dealt with.

## VI. LAND DISCHARGE MONITORING REQUIREMENTS

### A. Monitoring Location EFF-002

1. The Discharger shall monitor un-disinfected secondary-treated effluent to the onsite disposal ponds at EFF-002, as follows. If the discharge is intermittent, rather than continuous, then on the first day of each such intermittent discharge, the Discharger shall monitor and record data for all of the constituents listed in Table E-5, after which the frequencies of analysis given in the schedule shall apply for the duration of each such intermittent discharge. In no event shall the Discharger be required to monitor and record data more often than twice the frequencies listed in Table E-5.

**Table E-5. Land Discharge Monitoring Requirements**

| Parameter | Units | Sample Type | Minimum Sampling Frequency | Required Analytical Test Method |
|---|---|---|---|---|
| Flow | mgd | Meter | Continuous | -- |
| Biochemical Oxygen Demand (BOD) (5-day @ 20°C) | mg/L | Grab | 1/Week | 1 |
| Total Suspended Solids | mg/L | Grab | 1/Week | 1 |
| pH | standard units | Grab | 1/Day | 1,2,4 |
| Ammonia Nitrogen, Total (as N) | mg/L | Grab | 1/Month | 1 |
| Boron | mg/L | Grab | 1/Month | 1 |
| Chloride | mg/L | Grab | 1/Month | 1 |
| Electrical Conductivity @ 25°C | µmhos/cm | Grab | 1/Day | 1 |
| General Minerals[3] | mg/L | Grab | 1/Year | 1 |
| Nitrate Nitrogen, Total (as N) | mg/L | Grab | 1/Month | 1 |
| Settleable Solids | ml/L | Grab | 1/Week | 1 |
| Total Dissolved Solids | mg/L | Grab | 1/Month | 1 |
| Total Kjeldahl Nitrogen | mg/L | Grab | 1/Month | 1 |
| Total Nitrogen | mg/L | Calculate | 1/Month | -- |

[1] Pollutants shall be analyzed using the analytical methods described in 40 CFR Part 136 or by methods approved by the Central Valley Water Board or the State Water Board.

[2] A hand-held field meter may be used, provided the meter utilizes a U.S. EPA-approved algorithm/method and is calibrated and maintained in accordance with the manufacturer's instructions. A calibration and maintenance log for each meter used for monitoring required by this Monitoring and Reporting Program shall be maintained at the Facility.

[3] General minerals shall include the following: boron, calcium, iron, magnesium, potassium, sodium, chloride, manganese, phosphorus, total alkalinity (including alkalinity series), and hardness, and include verification that the analysis is complete (i.e., cation/anion balance).

[4] pH samples must be analyzed within 15 minutes of sample collection, in accordance with 40 CFR Part 136.

## VII. RECYCLING MONITORING REQUIREMENTS – NOT APPLICABLE

## VIII. RECEIVING WATER MONITORING REQUIREMENTS

### A. Monitoring Locations RSW-001 and RSW-002

1. The Discharger shall monitor Central Canal at RSW-001 and RSW-002, as follows. The Discharger is only required to monitor Central Canal when there is discharge at Discharge Point 001. If the discharge is intermittent, rather than continuous, then on the first day of each such intermittent discharge, the Discharger shall monitor and record data for all of the constituents listed in Table E-6, after which the frequencies of analysis given in the schedule shall apply for the duration of each such intermittent discharge. In no event shall the Discharger be required to monitor and record data more often than twice the frequencies listed in Table E-6.

**Table E-6. Receiving Water Monitoring Requirements – RSW-001 and RSW-002**

| Parameter | Units | Sample Type | Minimum Sampling Frequency | Required Analytical Test Method |
|---|---|---|---|---|
| Flow | mgd/cfs | Meter | Continuous[5] | -- |
| pH | standard units | Grab | 1/Week[1] | [2,3,10] |
| Priority Pollutants | vary | Grab | 1/Year[4,5] | [2,6,7,8] |
| Aluminum, Total Recoverable | µg/L | Grab | 1/Month | [2] |
| Ammonia Nitrogen, Total (as N) | mg/L | Grab | 1/Month[1] | [2] |
| Ammonia, un-ionized (as N) | mg/L | Calculate | 1/Month | -- |
| Dissolved Oxygen | mg/L | Grab | 1/Week | [2,3,10] |
| Electrical Conductivity @ 25°C | µmhos/cm | Grab | 1/Week | [2] |
| Fecal Coliform | MPN/100 mL | Grab | 1/Month | [2] |
| General Minerals[9] | mg/L | Grab | 1/Year | [2] |
| Hardness (as $CaCO_3$) | mg/L | Grab | 1/Month[5] | [2] |
| Nitrate Nitrogen, Total (as N) | mg/L | Grab | 1/Month | [2] |
| Temperature | °C/°F | Grab | 1/Week[1] | [2,3,10] |
| Total Dissolved Solids | mg/L | Grab | 1/Month | [2] |

[1] pH and temperature shall be recorded at the time of ammonia sample collection.
[2] Pollutants shall be analyzed using the analytical methods described in 40 CFR Part 136 or by methods approved by the Central Valley Water Board or the State Water Board.
[3] A hand-held field meter may be used, provided the meter utilizes a U.S. EPA-approved algorithm/method and is calibrated and maintained in accordance with the manufacturer's instructions. A calibration and maintenance log for each meter used for monitoring required by this Monitoring and Reporting Program shall be maintained at the Facility.
[4] Concurrent with effluent priority pollutant sampling at EFF-001.
[5] Monitoring is only required at RSW-001.
[6] In order to verify if bis(2-ethylhexyl) phthalate is truly present in the receiving water, the Discharger shall take steps to ensure that sample containers, sampling apparatus, and analytical equipment are not sources of the detected contaminant.
[7] Total mercury samples shall be taken using clean hands/dirty hands procedures, as described in U.S. EPA method 1669: *Sampling Ambient Water for Trace Metals at EPA Water Quality Criteria Levels*, for collection of equipment blanks (section 9.4.4.2), and shall be analyzed by U.S. EPA method 1630/1631 (Revision E) with a reporting limit of 0.5 ng/L for total recoverable mercury.
[8] Reporting levels shall be equal to the reporting levels specified in Attachment I of this Order. If more than one analytical test method and reporting level is listed for a given parameter in Attachment I, the Discharger may select from the listed methods and corresponding reporting level.
[9] General minerals shall include the following: boron, calcium, iron, magnesium, potassium, sodium, chloride, manganese, phosphorus, total alkalinity (including alkalinity series), and hardness, and include verification that the analysis is complete (i.e., cation/anion balance).
[10] pH and DO samples must be analyzed within 15 minutes of sample collection, and temperature must be analyzed immediately, in accordance with 40 CFR Part 136

### B. Monitoring Location GW-00*n*

1. Once installed, all new groundwater wells shall be added to the monitoring network (which currently consists of Monitoring Wells MW-1, MW-2, MW-3, and MW-4) and shall be sampled and analyzed according to the schedule below. All samples shall be collected using approved U.S. EPA methods. Water table elevations shall be measured to determine groundwater gradient and direction of flow.

2. Prior to sampling, the groundwater elevations shall be measured and the wells shall be purged of at least three well volumes until temperature, pH, and electrical conductivity have stabilized. Depth to groundwater shall be measured to the nearest 0.01 feet. Groundwater elevation shall be determined based on depth-to-water measurements from a surveyed measuring point elevation on the well. The groundwater elevation shall be used to calculate the direction and gradient of groundwater flow, which must be reported. Groundwater monitoring at MW-1, MW-2, MW-3, MW-4, and any new groundwater monitoring wells shall include, at a minimum, the following:

**Table E-7. Groundwater Monitoring Requirements**

| Parameter | Units | Sample Type | Minimum Sampling Frequency | Required Analytical Test Method |
|---|---|---|---|---|
| Depth to Groundwater | feet below ground surface | Measured | 1/Quarter[1] | -- |
| Groundwater Elevation | feet MSL | Calculate | 1/Quarter[1] | -- |
| Gradient | feet/feet | Calculate | 1/Quarter[1] | -- |
| Gradient Direction | degrees | Calculate | 1/Quarter[1] | -- |
| pH | standard units | Grab | 1/Quarter[1] | [2,3,5] |
| Ammonia, Total (as N) | mg/L | Grab | 1/Quarter[1] | [2] |
| Chloride | mg/L | Grab | 1/Quarter[1] | [2] |
| Electrical Conductivity @ 25°C | µmhos/cm | Grab | 1/Quarter[1] | [2] |
| General Minerals[4] | mg/L | Grab | 1/Quarter[1] | [2] |
| Nitrate Nitrogen, Total (as N) | mg/L | Grab | 1/Quarter[1] | [2] |
| Total Dissolved Solids | mg/L | Grab | 1/Quarter[1] | [2] |
| Total Kjeldahl Nitrogen | mg/L | Grab | 1/Quarter[1] | [2] |
| Total Organic Carbon | mg/L | Grab | 1/Quarter[1] | [2] |
| Total Nitrogen | mg/L | Calculate | 1/Quarter[1] | -- |

[1] New groundwater monitoring wells shall be sampled monthly (1/month) for twelve months, after which they shall be sampled in accordance with the minimum sampling frequency.

[2] Pollutants shall be analyzed using the analytical methods described in 40 CFR Part 136 or by methods approved by the Central Valley Water Board Executive Officer or the State Water Board. Samples collected for metals shall be filtered using a 0.45 µm filter prior to preservation, digestion, and analysis.

[3] A hand-held field meter may be used, provided the meter utilizes a U.S. EPA-approved algorithm/method and is calibrated and maintained in accordance with the manufacturer's instructions. A calibration and maintenance log for each meter used for monitoring required by this Monitoring and Reporting Program shall be maintained at the Facility.

[4] General minerals shall include the following: boron, calcium, iron, magnesium, potassium, sodium, chloride, manganese, phosphorus, total alkalinity (including alkalinity series), and hardness, and include verification that the analysis is complete (i.e., cation/anion balance).

[5] pH samples must be analyzed within 15 minutes of sample collection, in accordance with 40 CFR Part 136

## IX. OTHER MONITORING REQUIREMENTS

### A. Biosolids

1. Monitoring Location BIO-001

   a. A composite sample of sludge shall be collected **annually (1/year)** at Monitoring Location BIO-001 in accordance with U.S. EPA's *POTW Sludge Sampling and Analysis Guidance Document*, August 1989, and tested for priority pollutants listed in 40 CFR Part 122, Appendix D, Tables II and III (excluding total phenols).

   b. Biosolids monitoring shall be conducted using the methods in *Test Methods for Evaluating Solid Waste, Physical/Chemical* (U.S. EPA publication SW-846), as required in 40 CFR 503.8(b)(4). All results must be reported on a 100% dry weight basis. Records of all analyses must state on each page of the laboratory report whether the results are expressed in "100% dry weight" or "as is."

   c. Sampling records shall be retained for a minimum of **5 years**. A log shall be maintained of sludge quantities generated and of handling and disposal activities. The frequency of entries is discretionary; however, the log must be complete enough to serve as a basis for part of the annual report.

### B. Municipal Water Supply

1. Monitoring Location SPL-001

   a. The Discharger shall monitor the municipal water supply at SPL-001 as follows. Sampling stations shall be established where representative samples of the municipal water supply can be obtained. Municipal water supply samples shall be collected at approximately the same time as effluent samples, at minimum on the same day as samples collected for the same parameters. The results for EC and nitrate shall be reported as flow-weighted monthly averages and be supplemented with supporting calculations.

**Table E-8. Municipal Water Supply Monitoring Requirements**

| Parameter | Units | Sample Type | Minimum Sampling Frequency | Required Analytical Test Method |
|---|---|---|---|---|
| Total Flow | million gallons | Meter | Continuous[1] | -- |
| Electrical Conductivity @ 25°C | µmhos/cm | Grab | 1/Month | [2] |
| General Minerals[3] | mg/L | Grab | 1/Year | [2] |

[1] Reported as total flow per month, per water source (well), on a monthly basis.
[2] Pollutants shall be analyzed using the analytical methods described in 40 CFR Part 136 or by methods approved by the Central Valley Water Board or the State Water Board.
[3] General minerals shall include the following: boron, calcium, iron, magnesium, potassium, sodium, chloride, manganese, phosphorus, total alkalinity (including alkalinity series), and hardness, and include verification that the analysis is complete (i.e., cation/anion balance).

### C. Filtration System Monitoring

1. Monitoring Location FIL-001

   a. The Discharger shall monitor the influent to filtration system at Monitoring Location FIL-001, as follows:

**Table E-9. Filtration System Monitoring Requirements – FIL-001**

| Parameter | Units | Sample Type | Minimum Sampling Frequency | Required Analytical Test Method |
|---|---|---|---|---|
| Filtration Rate | [1] | Calculate | Continuous | -- |

| Parameter | Units | Sample Type | Minimum Sampling Frequency | Required Analytical Test Method |
|---|---|---|---|---|
| Turbidity[2] | NTU | Meter | Continuous[3,4] | [5] |

[1] Units are gallons per minute per square foot of surface area (gpm/ft$^2$).
[2] **Turbidity monitoring is only required when the Discharger is <u>not</u> using coagulation.**
[3] For continuous analyzers, the Discharger shall report documented routine meter maintenance activities including date, time of day, and duration in which the analyzer is not in operation.
[4] If turbidity exceeds 5 NTU for more than 15 minutes when <u>not</u> coagulating, the Discharger shall add chemicals or divert the wastewater. If turbidity exceeds 10 NTU when <u>not</u> coagulating and the wastewater is not diverted, the Discharger shall collect a sample as soon as practicable for total coliform at Monitoring Location EFF-001 and report the duration of the turbidity exceedance.
[5] Pollutants shall be analyzed using the analytical methods described in 40 CFR Part 136 or by methods approved by the Central Valley Water Board or the State Water Board.

2. Monitoring Location FIL-002

b. The Discharger shall monitor the effluent from the filtration system prior to disinfection at Monitoring Location FIL-002, as follows:

**Table E-10. Filtration System Monitoring Requirements – FIL-002**

| Parameter | Units | Sample Type | Minimum Sampling Frequency | Required Analytical Test Method |
|---|---|---|---|---|
| Turbidity | NTU | Meter | Continuous[1,2] | [3] |

[1] For continuous analyzers, the Discharger shall report documented routine meter maintenance activities including date, time of day, and duration in which the analyzer is not in operation.
[2] If turbidity exceeds 10 NTU when coagulation is used or 2 NTU when coagulation is <u>not</u> used, and the wastewater is not diverted, the Discharger shall collect a sample as soon as practicable for total coliform at Monitoring Location EFF-001 and report the duration of the turbidity exceedance.
[3] Pollutants shall be analyzed using the analytical methods described in 40 CFR Part 136 or by methods approved by the Central Valley Water Board or the State Water Board.

## D. Ultraviolet Light (UV) Disinfection System

1. Monitoring Location UVS-001

a. The Discharger shall monitor the UV disinfection system at UVS-001 as follows:

**Table E-11. Ultraviolet Light Disinfection System Monitoring Requirements**

| Parameter | Units | Sample Type | Minimum Sampling Frequency |
|---|---|---|---|
| Flow | mgd | Meter | Continuous[1] |
| Number of UV banks in operation | Number | Meter | Continuous[1] |
| UV Transmittance | Percent (%) | Meter | Continuous[1] |
| UV Power Setting | Percent (%) | Meter | Continuous[1] |
| UV Dose | [3] | Calculate[2] | Continuous[1] |

[1] For continuous analyzers, the Discharger shall report documented routine meter maintenance activities, including date, time of day, and duration in which the analyzer(s) is not in operation.
[2] Report daily minimum UV dose, daily average UV dose, and weekly average UV dose. For the daily minimum UV dose, also report associated number of banks, gallons per minute per lamp, and UV transmittance used in the calculation. If effluent discharge has received less than the minimum UV dose and is not diverted from discharging to Central Canal, report the duration and dose calculation variables associated with each incident.
[3] UV dosage shall be reported in units of milllijoules per square centimeter (mJ/cm$^2$).

## X. REPORTING REQUIREMENTS

### A. General Monitoring and Reporting Requirements

1. The Discharger shall comply with all Standard Provisions (Attachment D) related to monitoring, reporting, and recordkeeping.
2. Upon written request from the Central Valley Water Board, the Discharger shall submit a summary monitoring report. The report shall contain both tabular and graphical summaries of the monitoring data obtained during the previous year(s).
3. **Compliance Time Schedules.** For compliance time schedules included in the Order, the Discharger shall submit to the Central Valley Water Board, on or before each compliance due date, the specified document or a written report detailing compliance or noncompliance with the specific date and task. If noncompliance is reported, the Discharger shall state the reasons for noncompliance and include an estimate of the date when the Discharger will be in compliance. The Discharger shall notify the Central Valley Water Board by letter when it returns to compliance with the compliance time schedule.
4. The Discharger shall report to the Central Valley Water Board any toxic chemical release data it reports to the State Emergency Response Commission within 15 days of reporting the data to the Commission pursuant to section 313 of the "*Emergency Planning and Community Right to Know Act*" of 1986.

### B. Self-Monitoring Reports (SMRs) and Discharge Monitoring Reports (DMRs)

1. The Discharger shall electronically submit SMRs and DMRs using the State Water Board's California Integrated Water Quality System (CIWQS) Program Web site (http://ciwqs.waterboards.ca.gov/). The CIWQS Web site will provide additional information for SMR and DMR submittal in the event there will be a planned service interruption for electronic submittal. The Discharger shall maintain sufficient staffing and resources to ensure it submits SMRs and DMRs that are complete and timely. This includes provision of training and supervision of individuals on how to prepare and submit SMRs and DMRs.
2. Monitoring periods and reporting for all required monitoring shall be completed according to the following schedule:

**Table E-12. Monitoring Periods and Reporting Schedule**

| Sampling Frequency | Monitoring Period Begins On… | Monitoring Period | SMR/DMR Due Date |
|---|---|---|---|
| Continuous | Permit effective date | All | Submit with monthly SMR/DMR |
| 1/Day | Permit effective date | (Midnight through 11:59 PM) or any 24-hour period that reasonably represents a calendar day for purposes of sampling | Submit with monthly SMR/DMR |
| 1/Week | Permit effective date | Sunday through Saturday | Submit with monthly SMR/DMR |
| 1/Month | Permit effective date | 1st day of calendar month through last day of calendar month | First day of second calendar month following month of sampling |
| 1/Quarter (Groundwater; Chronic Toxicity) | Permit effective date | 1 January through 31 March<br>1 April through 30 June<br>1 July through 30 September<br>1 October through 31 December | 1 May<br>1 August<br>1 November<br>1 February |

| Sampling Frequency | Monitoring Period Begins On… | Monitoring Period | SMR/DMR Due Date |
|---|---|---|---|
| 1/Quarter (Pretreatment) | Permit effective date | 1 January through 31 March<br>1 April through 30 June<br>1 July through 30 September<br>1 October through 31 December | 1 May<br>1 August<br>1 November<br>28 February (with Annual) |
| 2/Year (Acute Toxicity) | Permit effective date | 1 January through 30 June<br>1 July through 31 December | Submit with the monthly SMR/DMR in which sample was taken (e.g., if a sample is taken in March, the result must be included in the March SMR/DMR [due 1 May]) |
| 1/Year | Permit effective date | 1 January through 31 December | Submit with the monthly SMR/DMR in which sample was taken (e.g., if a sample is taken in March, the result must be included in the March SMR/DMR [due 1 May]) |
| 1/Year (Biosolids) | Permit effective date | 1 January through 31 December | Submit with Annual Report |
| 1/Year (Annual Report) | Permit effective date | 1 January through 31 December | 1 February |
| 1/Year (Pretreatment) | Permit effective date | 1 January through 31 December | 28 February |

3. **Reporting Protocols.** The Discharger shall report with each sample result the applicable Reporting Level (RL) and the current laboratory's Method Detection Limit (MDL), as determined by the procedure in 40 CFR part 136.

   The Discharger shall report the results of analytical determinations for the presence of chemical constituents in a sample using the following reporting protocols:

   a. Sample results greater than or equal to the RL shall be reported as measured by the laboratory (i.e., the measured chemical concentration in the sample).

   b. Sample results less than the RL, but greater than or equal to the laboratory's MDL, shall be reported as "Detected, but Not Quantified," or DNQ. The estimated chemical concentration of the sample shall also be reported.

      For the purposes of data collection, the laboratory shall write the estimated chemical concentration next to DNQ. The laboratory may, if such information is available, include numerical estimates of the data quality for the reported result. Numerical estimates of data quality may be percent accuracy (± a percentage of the reported value), numerical ranges (low to high), or any other means considered appropriate by the laboratory.

   c. Sample results less than the laboratory's MDL shall be reported as "Not Detected," or ND.

   d. Dischargers are to instruct laboratories to establish calibration standards so that the Minimum Level (ML) value (or its equivalent if there is differential treatment of samples relative to calibration standards) is the lowest calibration standard. At no time is the Discharger to use analytical data derived from extrapolation beyond the lowest point of the calibration curve.

4. **Multiple Sample Data.** When determining compliance with an AMEL or MDEL for priority pollutants and more than one sample result is available, the Discharger shall compute the

arithmetic mean unless the data set contains one or more reported determinations of "Detected, but Not Quantified" (DNQ) or "Not Detected" (ND). In those cases, the Discharger shall compute the median in place of the arithmetic mean in accordance with the following procedure:

a. The data set shall be ranked from low to high, ranking the reported ND determinations lowest, DNQ determinations next, followed by quantified values (if any). The order of the individual ND or DNQ determinations is unimportant.

b. The median value of the data set shall be determined. If the data set has an odd number of data points, then the median is the middle value. If the data set has an even number of data points, then the median is the average of the two values around the middle unless one or both of the points are ND or DNQ, in which case the median value shall be the lower of the two data points where DNQ is lower than a quantified value and ND is lower than DNQ.

5. The Discharger shall submit eSMRs and DMRs in accordance with the following requirements:

a. The Discharger shall arrange all reported data in a tabular format, using the Permittee Entry Template (PET) Tool. The data shall be summarized to clearly illustrate whether the Facility is operating in compliance with interim and/or final effluent limitations. The Discharger is not required to duplicate the submittal of data that is entered in a tabular format within CIWQS. When electronic submittal of data is required and CIWQS does not provide for entry into a tabular format within the system, the Discharger shall electronically submit the data in a tabular format as an attachment under the Attachments tab.

b. The Discharger shall submit DMR data using the DMR tab in CIWQS.

c. The Discharger shall attach complete laboratory reports, as it receives them from any contract laboratory, with all its eSMRs for which sample analyses were performed. This includes, but is not limited to, all laboratory analysis sheets and quality assurance/quality control information.

d. Violations must be entered into CIWQS under the Violations tab for the reporting period in which the violation occurred. Violations do not need to duplicated in the Annual Report if they have already been entered.

e. The Discharger shall attach or enter a cover letter with each eSMR. The cover letter shall include any information the Discharger would like to convey to Central Valley Water Board staff. If violations have been entered with complete entries on corrective actions and time frames, that information does not need to be repeated in the cover letter.

6. **Calculation Requirements.** The following shall be calculated and reported in the SMRs:

a. **Mass Loading Limitations.** For $BOD_5$ and TSS, the Discharger shall calculate and report the mass loading (lbs/day) in the SMRs. The mass loading shall be calculated as follows:

$$\text{Mass Loading (lbs/day)} = \text{Flow (mgd)} \times \text{Concentration (mg/L)} \times 8.34$$

When calculating daily mass loading, the daily average flow and constituent concentration shall be used. For weekly average mass loading, the weekly average flow and constituent concentration shall be used. For monthly average mass loading, the monthly average flow and constituent concentration shall be used.

b. **Removal Efficiency ($BOD_5$ and TSS).** The Discharger shall calculate and report the percent removal of $BOD_5$ and TSS in the SMRs. The percent removal shall be calculated as specified in Section VII.A. of the Limitations and Discharge Requirements.

c. **Total Coliform Effluent Limitations.** The Discharger shall calculate and report the 7-sample median of total coliform for the effluent. The 7-sample median of total coliform shall be calculated as specified in Section VII.B. of the Limitations and Discharge Requirements.

d. **Dissolved Oxygen Receiving Water Limitations.** The Discharger shall calculate and report monthly in the self-monitoring report: i) the dissolved oxygen concentration, ii) the percent of saturation in the main water mass, and iii) the 95th percentile dissolved oxygen concentration. The values shall be reported for RSW-001 and RSW-002. The monthly median of the mean daily dissolved oxygen concentration and the 95 percentile concentration shall be determined as follows: (a) calculate the percent of saturation for each monitoring event during the month (based on the temperature for each monitoring event), (b) calculate the median of all the percent of saturation values computed during the month, and (c) calculate the 95th percentile of all the percent of saturation values computed during the month.

e. **Turbidity Receiving Water Limitations.** The Discharger shall calculate and report the turbidity increase in the receiving water applicable to the natural turbidity condition specified in Section V.A.18.a-d of the Limitations and Discharge Requirements.

f. **Temperature Receiving Water Limitations.** The Discharger shall calculate and report the temperature increase in the receiving water based on the difference in temperature at RSW-001 and RSW-002.

**C. Other Reports**

1. The Discharger shall report the results of any special studies, acute and chronic toxicity testing, and TRE/TIE required under Special Provisions VI.C.

2. By **<60 days of permit effective date>**, the Discharger shall submit a report outlining reporting levels (RLs), method detection limits, and analytical methods for approval. The Discharger shall comply with the monitoring and reporting requirements for CTR constituents as outlined in section 2.3 and 2.4 of the SIP. The maximum required reporting levels for priority pollutant constituents shall be based on the Minimum Levels (MLs) contained in Appendix 4 of the SIP, determined in accordance with Section 2.4.2 and Section 2.4.3 of the SIP. In accordance with Section 2.4.2 of the SIP, when there is more than one ML value for a given substance, the Central Valley Water Board shall include as RLs, in the permit, all ML values, and their associated analytical methods, listed in Appendix 4 that are below the calculated effluent limitation. The Discharger may select any one of those cited analytical methods for compliance determination. If no ML value is below the effluent limitation, then the Central Valley Water Board shall select as the RL, the lowest ML value, and its associated analytical method, listed in Appendix 4 for inclusion in the permit. Attachment I provides required maximum reporting levels in accordance with the SIP.

3. **Annual Operations Report.** By **1 February** of each year, the Discharger shall submit a written report to the Executive Officer containing the following:

   a. The names, certificate grades, and general responsibilities of all persons employed at the Facility.

   b. The names and telephone numbers of persons to contact regarding the Facility for emergency and routine situations.

c. A statement certifying when the flow meter(s) and other monitoring instruments and devices were last calibrated, including identification of who performed the calibration.

d. A statement certifying whether the current operation and maintenance manual, and contingency plan, reflect the wastewater treatment plant as currently constructed and operated, and the dates when these documents were last revised and last reviewed for adequacy.

e. If the Discharger submits, and the Executive Officer approves, the request for a higher flow limitation at Discharge Point 002 (disposal ponds), the Discharger must submit in its annual report a description of which disposal ponds received maintenance work during the calendar year, and a statement certifying whether the disposal ponds still have the disposal capacity approved by the Executive Officer. If the Discharger determines that the disposal ponds no longer have enough capacity to dispose of the permitted flow, the Discharger shall include a detailed explanation of what it intends to do to restore disposal capacity, and a schedule for doing so.

f. Beginning **<permit expiration date>**, the Discharger shall provide documentation that it conferred with Fresno Irrigation District regarding the beginning and end of irrigation water deliveries. The documentation must specify the beginning and end dates of the irrigation water delivery period for the year.

g. The Discharger may also be requested to submit an annual report to the Central Valley Water Board with both tabular and graphical summaries of the monitoring data obtained during the previous year. Any such request shall be made in writing. The report shall discuss the compliance record. If violations have occurred, the report shall also discuss the corrective actions taken and planned to bring the discharge into full compliance with the waste discharge requirements.

4. **Annual Pretreatment Reporting Requirements**. The Discharger shall submit **annually (1/year)** a report to the Central Valley Water Board, with copies to U.S. EPA Region 9 and the State Water Board, describing the Discharger's pretreatment activities over the previous 12 months (1 January through 31 December). In the event that the Discharger is not in compliance with any conditions or requirements of this Order, including noncompliance with pretreatment audit/compliance inspection requirements, then the Discharger shall also include the reasons for noncompliance and state how and when the Discharger shall comply with such conditions and requirements.

   An annual report shall be submitted by **28 February** and include at least the following items:

   a. A summary of analytical results from representative, flow proportioned, 24-hour composite sampling of the Facility's influent and effluent for those pollutants U.S. EPA has identified under section 307(a) of the CWA which are known or suspected to be discharged by nondomestic users. This will consist of an annual full priority pollutant scan. The Discharger is not required to sample and analyze for asbestos. The Discharger shall submit the results of the annual priority pollutant scan electronically to the Central Valley Water Board using the State Water Board's CIWQS Program Website.

      Sludge shall be sampled during the same 24-hour period and analyzed for the same pollutants as the influent and effluent sampling and analysis. The sludge analyzed shall be a composite sample of a minimum of 12 discrete samples taken at equal time intervals over the 24-hour period. Wastewater and sludge sampling and analysis shall be performed at least annually. The Discharger shall also provide any influent, effluent or sludge monitoring data for non-priority pollutants that may be causing or contributing to interference, pass-through or adversely impacting sludge quality. Sampling and

analysis shall be performed in accordance with the techniques prescribed in 40 CFR Part 136 and amendments thereto.

b. A discussion of upset, interference, or pass-through incidents, if any, at the Facility, which the Discharger knows or suspects were caused by nondomestic users of the Facility. The discussion shall include the reasons why the incidents occurred, the corrective actions taken and, if known, the name and address of, the nondomestic user(s) responsible. The discussion shall also include a review of the applicable pollutant limitations to determine whether any additional limitations, or changes to existing requirements, may be necessary to prevent pass-through, interference, or noncompliance with sludge disposal requirements.

c. The cumulative number of nondomestic users that the Discharger has notified regarding Baseline Monitoring Reports and the cumulative number of nondomestic user responses.

d. An updated list of the Discharger's significant industrial users (SIUs) including their names and addresses, or a list of deletions, additions and SIU name changes keyed to a previously submitted list. The Discharger shall provide a brief explanation for each change. The list shall identify the SIUs subject to federal categorical standards by specifying which set(s) of standards are applicable to each SIU. The list shall indicate which SIUs, or specific pollutants from each industry, are subject to local limitations. Local limitations that are more stringent than the federal categorical standards shall also be identified.

e. The Discharger shall characterize the compliance status through the year of record of each SIU by employing the following descriptions:

   i. complied with baseline monitoring report requirements (where applicable);

   ii. consistently achieved compliance;

   iii. inconsistently achieved compliance;

   iv. significantly violated applicable pretreatment requirements as defined by 40 CFR 403.8(f)(2)(vii);

   v. complied with schedule to achieve compliance (include the date final compliance is required);

   vi. did not achieve compliance and not on a compliance schedule; and

   vii. compliance status unknown.

f. A report describing the compliance status of each SIU characterized by the descriptions in items i through vii above shall be submitted **quarterly (1/quarter)**. The report shall identify the specific compliance status of each such SIU and shall also identify the compliance status of the Facility with regards to audit/pretreatment compliance inspection requirements. If none of the aforementioned conditions exist, at a minimum, a letter indicating that all industries are in compliance and no violations or changes to the pretreatment program have occurred during the quarter must be submitted. The information required in the fourth quarter report shall be included as part of the annual report due every 28 February. This quarterly reporting requirement shall commence upon issuance of this Order.

g. A summary of the inspection and sampling activities conducted by the Discharger during the past year to gather information and data regarding the SIUs. The summary shall include:

i. The names and addresses of the SIUs subjected to surveillance and an explanation of whether they were inspected, sampled, or both and the frequency of these activities at each user; and

ii. The conclusions or results from the inspection or sampling of each industrial user.

h. The Discharger shall characterize the compliance status of each SIU by providing a list or table which includes the following information:

i. Name of SIU;

ii. Category, if subject to federal categorical standards;

iii. The type of wastewater treatment or control processes in place;

iv. The number of samples taken by the Discharger during the year;

v. The number of samples taken by the SIU during the year;

vi. For an SIU subject to discharge requirements for total toxic organics, whether all required certifications were provided;

vii. A list of the standards violated during the year. Identify whether the violations were for categorical standards or local limits.

viii. Whether an SIU or nondomestic user is in significant noncompliance (SNC) as defined at 40 CFR 403.8(f)(2)(viii) at any time during the year; and

ix. A summary of enforcement or other actions taken during the year to return the SIU to compliance. Describe the type of action (e.g., warning letters or notices of violation, administrative orders, civil actions, and criminal actions), final compliance date, and the amount of fines and penalties collected, if any. Describe any proposed actions for bringing the SIU into compliance;

x. Restriction of flow to the Facility.

xi. Disconnection from discharge to the Facility.

i. A brief description of any programs the Discharger implements to reduce pollutants from nondomestic users that are not classified as SIUs;

j. A brief description of any significant changes in operating the pretreatment program which differ from the previous year including, but not limited to, changes concerning: the program's administrative structure, local limits, monitoring program or monitoring frequencies, legal authority, enforcement policy, funding levels, or staffing levels;

k. A summary of the annual pretreatment budget, including the cost of pretreatment program functions and equipment purchases; and

l. A summary of activities to involve and inform the public of the program including a copy of the newspaper notice, if any, required under 40 CFR 403.8(f)(2)(viii).

Pretreatment Program reports shall be submitted to the Central Valley Water Board via CIWQS and:

State Water Resources Control Board
Division of Water Quality
1001 I Street
Sacramento, CA 95812

or
P.O. Box 100
Sacramento, CA 95812

and the

Regional Administrator
U.S. Environmental Protection Agency, Region 9 ~~WTR-5~~
R9Pretreatment@epa.gov
~~75 Hawthorne Street~~
~~San Francisco, CA 94105~~

# ATTACHMENT F – FACT SHEET

## Contents

I. PERMIT INFORMATION ..... F-3
II. FACILITY DESCRIPTION ..... F-4
A. DESCRIPTION OF WASTEWATER AND BIOSOLIDS TREATMENT AND CONTROLS ..... F-4
B. DISCHARGE POINTS AND RECEIVING WATERS ..... F-4
C. SUMMARY OF EXISTING REQUIREMENTS AND SELF-MONITORING REPORT (SMR) DATA ..... F-6
D. COMPLIANCE SUMMARY ..... F-8
E. PLANNED CHANGES ..... F-9
III. APPLICABLE PLANS, POLICIES, AND REGULATIONS ..... F-10
A. LEGAL AUTHORITIES ..... F-10
B. CALIFORNIA ENVIRONMENTAL QUALITY ACT (CEQA) ..... F-10
C. STATE AND FEDERAL LAWS, REGULATIONS, POLICIES, AND PLANS ..... F-10
D. IMPAIRED WATER BODIES ON CWA 303(D) LIST ..... F-12
E. OTHER PLANS, POLICES, AND REGULATIONS ..... F-13
IV. RATIONALE FOR EFFLUENT LIMITATIONS AND DISCHARGE SPECIFICATIONS ..... F-13
A. DISCHARGE PROHIBITIONS ..... F-14
B. TECHNOLOGY-BASED EFFLUENT LIMITATIONS ..... F-15
1. SCOPE AND AUTHORITY ..... F-15
2. APPLICABLE TECHNOLOGY-BASED EFFLUENT LIMITATIONS ..... F-15
C. WATER QUALITY-BASED EFFLUENT LIMITATIONS (WQBELS) ..... F-16
1. SCOPE AND AUTHORITY ..... F-16
2. APPLICABLE BENEFICIAL USES AND WATER QUALITY CRITERIA AND OBJECTIVESF-17
3. DETERMINING THE NEED FOR WQBELS ..... F-24
4. WQBELS CALCULATIONS ..... F-44
5. WHOLE EFFLUENT TOXICITY (WET) ..... F-46
D. BASIN PLAN EFFLUENT LIMITATIONS. ..... F-49
E. FINAL EFFLUENT LIMITATION CONSIDERATIONS ..... F-49
1. MASS-BASED EFFLUENT LIMITATIONS ..... F-49
2. AVERAGING PERIODS FOR EFFLUENT LIMITATIONS ..... F-49
3. SATISFACTION OF ANTI-BACKSLIDING REQUIREMENTS ..... F-50
4. ANTIDEGRADATION POLICIES ..... F-52
5. STRINGENCY OF REQUIREMENTS FOR INDIVIDUAL POLLUTANTS ..... F-53
F. INTERIM EFFLUENT LIMITATIONS – NOT APPLICABLE ..... F-55
G. LAND DISCHARGE SPECIFICATIONS ..... F-55
H. RECYCLING SPECIFICATIONS – NOT APPLICABLE ..... F-55
V. RATIONALE FOR RECEIVING WATER LIMITATIONS ..... F-55
A. SURFACE WATER ..... F-55
B. GROUNDWATER ..... F-55
VI. RATIONALE FOR PROVISIONS ..... F-56
A. STANDARD PROVISIONS ..... F-56
B. SPECIAL PROVISIONS ..... F-56
1. REOPENER PROVISIONS ..... F-56
2. SPECIAL STUDIES AND ADDITIONAL MONITORING REQUIREMENTS ..... F-57
3. BEST MANAGEMENT PRACTICES AND POLLUTION PREVENTION ..... F-60
4. CONSTRUCTION, OPERATION, AND MAINTENANCE SPECIFICATIONS ..... F-60
5. SPECIAL PROVISIONS FOR MUNICIPAL FACILITIES (POTWS ONLY) ..... F-60

6. OTHER SPECIAL PROVISIONS ..... F-61
7. COMPLIANCE SCHEDULES – NOT APPLICABLE ..... F-62
VII. RATIONALE FOR MONITORING AND REPORTING REQUIREMENTS ..... F-62
A. INFLUENT MONITORING ..... F-62
B. EFFLUENT MONITORING ..... F-62
C. WHOLE EFFLUENT TOXICITY TESTING REQUIREMENTS ..... F-63
D. RECEIVING WATER MONITORING ..... F-63
1. SURFACE WATER ..... F-63
2. GROUNDWATER ..... F-63
E. OTHER MONITORING REQUIREMENTS ..... F-64
VIII. PUBLIC PARTICIPATION ..... F-65
A. NOTIFICATION OF INTERESTED PARTIES ..... F-65
B. WRITTEN COMMENTS ..... F-65
C. PUBLIC HEARING ..... F-65
D. RECONSIDERATION OF WASTE DISCHARGE REQUIREMENTS ..... F-66
E. INFORMATION AND COPYING ..... F-66
F. REGISTER OF INTERESTED PERSONS ..... F-66
G. ADDITIONAL INFORMATION ..... F-66

**Tables**

TABLE F-1. FACILITY INFORMATION ..... F-3
TABLE F-2. HISTORIC EFFLUENT LIMITATIONS AND MONITORING DATA AT DISCHARGE POINT 001 ..... F-6
TABLE F-3. HISTORIC DISCHARGE SPECIFICATIONS AND MONITORING DATA AT DISCHARGE POINT 002 ..... F-8
TABLE F-4. BASIN PLAN BENEFICIAL USES ..... F-10
TABLE F-5. SUMMARY OF TECHNOLOGY-BASED EFFLUENT LIMITATIONS ..... F-16
TABLE F-6. LEAD EVALUATION (DESIGN AMBIENT HARDNESS = 85 MG/L) ..... F-20
TABLE F-7. LEAD EVALUATION (DESIGN AMBIENT HARDNESS = 61 MG/L) ..... F-21
TABLE F-8. COPPER EVALUATION (DESIGN AMBIENT HARDNESS = 85 MG/L) ..... F-21
TABLE F-9. CHROMIUM III EVALUATION (DESIGN AMBIENT HARDNESS = 85 MG/L) ..... F-21
TABLE F-10. CADMIUM (CHRONIC) EVALUATION (DESIGN AMBIENT HARDNESS = 85 MG/L) F-22
TABLE F-11. CADMIUM (ACUTE) EVALUATION (DESIGN AMBIENT HARDNESS = 72 MG/L) ..... F-22
TABLE F-12. NICKEL EVALUATION (DESIGN AMBIENT HARDNESS = 85 MG/L) ..... F-22
TABLE F-13. SILVER (ACUTE) EVALUATION (DESIGN AMBIENT HARDNESS = 41 MG/L) ..... F-23
TABLE F-14. ZINC EVALUATION (DESIGN AMBIENT HARDNESS = 85 MG/L) ..... F-23
TABLE F-15. SUMMARY OF DESIGN AMBIENT HARDNESS AND CTR CRITERIA FOR HARDNESS-DEPENDENT METALS ..... F-24
TABLE F-16. SUMMARY OF WATER QUALITY-BASED EFFLUENT LIMITATIONS ..... F-45
TABLE F-17. WHOLE EFFLUENT CHRONIC TOXICITY TESTING RESULTS ..... F-47
TABLE F-18. SUMMARY OF FINAL EFFLUENT LIMITATIONS ..... F-53

# ATTACHMENT F – FACT SHEET

As described in section II.B. of this Order, the Central Valley Water Board incorporates this Fact Sheet as findings of the Central Valley Water Board supporting the issuance of this Order. This Fact Sheet includes the legal requirements and technical rationale that serve as the basis for the requirements of this Order.

This Order has been prepared under a standardized format to accommodate a broad range of discharge requirements for dischargers in California. Only those sections or subsections of this Order that are specifically identified as "not applicable" have been determined not to apply to this Discharger. Sections or subsections of this Order not specifically identified as "not applicable" are fully applicable to this Discharger.

## I. PERMIT INFORMATION

The following table summarizes administrative information related to the Facility.

**Table F-1. Facility Information**

| | |
|---|---|
| WDID | 5D100124001 |
| Discharger | Malaga County Water District |
| Name of Facility | Malaga Wastewater Treatment Facility |
| Facility Address | 3749 South Maple Avenue |
| | Fresno, CA 93725 |
| | Fresno County |
| Facility Contact, Title and Phone | James D. Anderson, General Manager/Chief Plant Operator, 559-485-7353 |
| Authorized Person to Sign and Submit Reports | James D. Anderson, General Manager/Chief Plant Operator, 559-485-7353 |
| Mailing Address | 3580 South Frank Street, Fresno, CA 93725 |
| Billing Address | 3580 South Frank Street, Fresno, CA 93725 |
| Type of Facility | Publicly Owned Treatment Works (POTW) |
| Major or Minor Facility | Major |
| Threat to Water Quality | 2 |
| Complexity | A |
| Pretreatment Program | Yes |
| Recycling Requirements | Not Applicable |
| Facility Permitted Flow | 0.45 million gallons per day (mgd) tertiary; 0.49 mgd secondary; 1.2 mgd total |
| Facility Design Flow | 0.45 mgd tertiary; 1.2 mgd secondary |
| Watershed | South Valley Floor Hydrologic Unit, Fresno Hydrologic Area (No. 551.30) |
| Receiving Water | Fresno Irrigation District Central Canal |
| Receiving Water Type | Inland Surface Water |

**A.** Malaga County Water District (hereinafter Discharger) is the owner and operator of the Malaga Wastewater Treatment Facility (hereinafter Facility), a Publicly-Owned Treatment Works (POTW).

For the purposes of this Order, references to the "discharger" or "permittee" in applicable federal and state laws, regulations, plans, or policy are held to be equivalent to references to the Discharger herein.

**B.** The Facility discharges wastewater to Fresno Irrigation District Central Canal, which is hydraulically connected to Fresno Slough, a water of the United States, within the South Valley Floor Hydrologic Unit, Fresno Hydrologic Area (No. 551.30). The Discharger was previously regulated by Order R5-2008-0033 and National Pollutant Discharge Elimination System

(NPDES) Permit No. CA0084239 adopted on 14 March 2008 and expired on 14 March 2013. Attachment B provides a map of the area around the Facility. Attachment C provides a flow schematic of the Facility.

Prior to making any change in the point of discharge, place of use, or purpose of use of treated wastewater that results in a decrease of flow in any portion of a watercourse, the Discharger must file a petition with the State Water Board, Division of Water Rights, and receive approval for such a change. The State Water Board retains the jurisdictional authority to enforce such requirements under Water Code section 1211.

**C.** The Discharger filed a report of waste discharge and submitted an application for reissuance of its WDRs and NPDES permit on 13 September 2012. The application was deemed sufficient on 1 March 2014. A site visit was conducted on 21 May 2014, to observe operations and collect additional data to develop limitations and requirements for waste discharge.

## II. FACILITY DESCRIPTION

The Discharger provides sewerage service for the community of Malaga and serves a population of approximately 1,300. The design daily average flow treatment capacity of the Facility is 1.2 million gallons per day (mgd) for secondary treatment and 0.45 mgd for tertiary treatment.

Based on a report prepared by Bartle Wells Associates in February 2010, the non-residential flows comprise over 90% of the flows into the Facility, with the other approximately 10% of flows coming from residential customers.

### A. Description of Wastewater and Biosolids Treatment and Controls

The treatment train consists of three screw pumps (one in service at a time), bar screen, grit chamber, flocculation tank (no longer in use), primary clarifier/dissolved air flotation unit, three activated sludge aeration basins, and three secondary sedimentation basins. Secondary-treated wastewater is discharged to onsite disposal ponds. When discharging to Central Canal, wastewater is tertiary-treated with filtration ("fuzzy" filter) and disinfected with ultraviolet light.

Solids handling includes two aerobic sludge digesters, sludge thickening tank, three soil-cement lined sludge drying beds, and a lined holding area for dried biosolids. Dried biosolids are hauled off-site for disposal, reuse, or further treatment prior to reuse.

### B. Discharge Points and Receiving Waters

1. The Facility is located in Section 25, T14S, R20E, MDB&M, as shown in Attachment B, a part of this Order.
2. Disinfected, tertiary-treated municipal wastewater is discharged at Discharge Point 001 to Fresno Irrigation District Central Canal, at point latitude 36° 40' 41.52" N and longitude 119° 44' 43.98" W.
3. Un-disinfected, secondary-treated municipal wastewater is discharged at Discharge Point 002 to eight onsite disposal ponds. The ponds have a surface area of approximately 23.24 acres and a storage capacity of approximately 185.92 acre-feet (60.6 million gallons).

   Cease and Desist Order (CDO) Order R5-2008-0032, adopted on 14 March 2008, required the Discharger to, among other things, evaluate its disposal capacity and propose measures to secure adequate disposal capacity through at least 2028. Based on the information submitted by the Discharger in its *Treatment and Disposal Capacity Study* (Study) on 28 July 2008, the disposal capacity of the ponds remains below the treatment capacity of the Facility. The Central Valley Water Board calculated the disposal capacity of the ponds based on 100-year rainfall and evaporation, assuming half of the storage capacity available at the beginning of the water year (1 October), and a percolation rate of 0.6 inch per day. The rainfall, evaporation, and percolation rates used for calculation were obtained from the

Study. The Study assumed the percolation rate would initially increase to 1.0 inch per day if, and when, the Discharger performed pond maintenance, including ripping and scraping. In September 2009, Central Valley Water Board staff provided a review of the Study, which indicated the Study was deficient and requested the Discharger re-submit the Study to address the deficiencies (noted in the review) and provide additional information. The Central Valley Water Board case file indicates a revised Study was not submitted. However, in April 2011, the Discharger submitted the *Short Term Improvements Implementation Report* (Report), which included a list of the ponds that had been drained, scraped and ripped. The Report also indicated the Discharger had adopted a moratorium on new sewer connections until the disposal capacity was expanded. The Discharger also reportedly had several discussions with the City of Fresno regarding consolidation of sewerage services, but no additional information was provided regarding this particular matter. Additionally, the Report indicated the Discharger had contacted entities to inquire about their willingness to sell property, or to receive recycled water, but none were reportedly willing to do so. The Report, however, did not include any updated information regarding percolation rates or disposal capacity.

In August 2013, the Central Valley Water Board requested updated information regarding the Facility's disposal capacity, and requested the Discharger provide the number of ponds that had received maintenance work and whether the work had affected disposal capacity (e.g., increased percolation rates). The Discharger's response did not include detailed information about which ponds had received maintenance work, and only indicated the Discharger intended to isolate one or more ponds to determine the current percolation rate. The Discharger did not submit subsequent documentation indicating whether it isolated disposal ponds to determine the percolation rate(s). Additionally, the Discharger provided three tables showing the pond disposal capacity for three different percolation rates and three different flow rates. In the discussion section, the Discharger did not discuss the meaning of each percolation rate or each flow rate and only indicated that the ponds had capacity for disposing of current flows with a 1.0 inch per day percolation rate. There was no other discussion on how the 1.0 inch per day percolation rate was determined, or why each table had a different effluent flow rate with each different percolation rate. Due to the vagueness in the Discharger's response to the August 2013 letter, Central Valley Water Board staff used information from the Discharger's 2008 Study to calculate the disposal capacity of the ponds.

On 27 October 2014, as part of the public comment period for adoption of this Order, the Discharger submitted an internal memorandum from its consulting engineer addressed to the Discharger. The memorandum included information that may be useful in determining if the disposal ponds have a higher disposal capacity. The memorandum was resubmitted on 3 November 2014 with the signature and stamp of the engineer in responsible charge. However, the memorandum did not include a proposed pond maintenance program from the Discharger and there was also no communication from the Discharger on whether it agreed with the information in the memorandum and whether it intends on implementing the engineer's recommendations. This Order provides a path for the Discharger to provide necessary information and obtain approval prior to allowing a higher effluent flow to Discharge Point 002.

Based on the ~~available data~~information in the July 2008 Study, which included the most complete and useful information, the estimated capacity of the disposal ponds is approximately 0.49 mgd, which is less than the average flow treated by the Facility between 2010-2013 of 0.65 mgd. This Order restricts the flow to the disposal ponds (Discharge Point 002) to 0.49 mgd as a monthly average. Additionally, this Order requires the Discharger to cease discharging to Central Canal during months when there are no irrigation water

deliveries by <**permit expiration date**> (see Fact Sheet section VI.B.6.b). The ~~new~~ lower flow effluent limitation for Discharge Point 002 and the requirement to cease discharge to Central Canal during months when there are no irrigation water deliveries by **<permit expiration date>** puts the Discharger in threatened noncompliance with this Order because the disposal capacity of the disposal ponds alone is insufficient to accommodate flows coming into the Facility. The Central Valley Water Board issued Cease and Desist Order R5-2014-**XXXX** to ensure the Discharger addresses the threatened noncompliance and addresses its disposal capacity issues.

4. Surface Water

   a. Central Canal is a distributary of the Kings River via the Fresno and Fancher Creek Canals, and feeds into other canals and aqueducts to the south and to the west. Central Canal is hydraulically connected to Fresno Slough, which drains to the San Joaquin River. Fresno Slough and San Joaquin River are waters of the United States.

   b. Receiving water flow data provided by the Discharger indicate that Central Canal is mostly dry (i.e., there is no flow upstream) during periods when there are no irrigation water deliveries. As such, when there is a discharge to Central Canal during periods when there are no irrigation water deliveries, the Canal is an effluent-dominated water body.

5. Groundwater

   a. Surface soils in the vicinity are moderately permeable and classified as Hesperia fine sandy loam, consisting of well-drained, mainly sandy loam underlain by a silty layer according to the Soil Conservation Service 1962 Soil Survey of the Eastern Fresno Area. The soil has a hardpan layer at five to seven feet that is underlain by alluvial fan deposits of alternating sand and clay layers.

   b. First encountered groundwater is approximately 50-60 feet below ground surface.

   c. Order R5-2008-00033 required the Discharger to monitor groundwater once per quarter for the first year of the permit and annually thereafter. The 2013 Annual Report indicated three of the four groundwater monitoring wells were dry. Discussions with Discharger personnel indicate the fourth well has also gone dry since. This Order requires groundwater monitoring. A companion cease and desist order requires the Discharger to modify its groundwater monitoring network to ensure adequate groundwater data are collected.

## C. Summary of Existing Requirements and Self-Monitoring Report (SMR) Data

Effluent limitations and discharge specifications contained in Order R5-2008-0033 for discharges from Discharge Point 001 (Monitoring Location EFF-001) and Discharge Point 002 (Monitoring Location EFF-002) and representative monitoring data from the term of Order R5-2008-0033 are as follows:

**Table F-2. Historic Effluent Limitations and Monitoring Data at Discharge Point 001**

| Parameter | Units | Effluent Limitations | | | Monitoring Data (April 2008–December 2013)[1] | | |
|---|---|---|---|---|---|---|---|
| | | Average Monthly | Average Weekly | Maximum Daily | Highest Average Monthly | Highest Average Weekly | Highest Maximum Daily |
| Flow | mgd | 0.45 | -- | -- | 0.43 | 0.45 | 0.47 |
| Electrical Conductivity @ 25°C | µmhos/cm | (see below) | -- | -- | 916 | -- | 2300 |
| Chloride | mg/L | -- | -- | 175 | -- | -- | 88 |

| Parameter | Units | Effluent Limitations | | | Monitoring Data (April 2008–December 2013)[1] | | |
|---|---|---|---|---|---|---|---|
| | | Average Monthly | Average Weekly | Maximum Daily | Highest Average Monthly | Highest Average Weekly | Highest Maximum Daily |
| pH | standard units | -- | -- | 6.5-8.3[2] | -- | -- | 6.5-9.7[2] |
| Biochemical Oxygen Demand ($BOD_5$) @ 20°C | mg/L | 10 | 15 | 30 | 7.0 | 19 | 19 |
| | lbs/day | 38 | 56 | 113 | 22 | 60 | 62 |
| | % removal | (see below) | -- | -- | 99.4[3] | -- | -- |
| Total Suspended Solids (TSS) | mg/L | 10 | 15 | 30 | 14 | 19 | 19 |
| | lbs/day | 38 | 56 | 113 | 38 | 59 | 61 |
| | % removal | (see below) | -- | -- | 99.7[3] | -- | -- |
| Settleable Solids | mL/L | 0.1 | -- | 0.2 | ND | -- | ND |
| Bromoform | µg/L | 4.3[6] | -- | 8.6[6] | 28 | -- | 28 |
| Chlorodibromomethane (Dibromochloromethane) | µg/L | 0.41[6] | -- | 0.82[6] | 69 | -- | 69 |
| Dichlorobromomethane (Bromodichloromethane) | µg/L | 0.56[6] | -- | 1.1[6] | 41 | -- | 41 |
| Ammonia Nitrogen, Total (as N) [May-Oct] | mg/L | 0.8[7] | -- | 1.1[7] | 2.6 | -- | 2.6 |
| | lbs/day | 3.0[7] | -- | 4.1[7] | 1.1 | -- | 9.4 |
| Ammonia Nitrogen, Total (as N) [Nov-Apr] | mg/L | 0.4[7] | -- | 0.6[7] | 1.0 | -- | 1.2 |
| | lbs/day | 1.5[7] | -- | 2.3[7] | 0.39 | -- | 3.7 |
| Boron | mg/L | -- | -- | 1.0 | -- | -- | 0.36 |
| Turbidity | NTU | 2 | -- | 5[4] | 4.6 | -- | 10 |
| Acute Toxicity | % survival | (see below) | | | -- | -- | 90[3] |
| Total Residual Chlorine | mg/L | (see below) | | | -- | -- | <0.01 |
| Total Coliform | MPN/100 mL | (see below) | | | -- | -- | 18[5] |

[1] These data include data collected prior to the Discharger implementing ultraviolet light disinfection and bringing several treatment units back into service. See Section IV.C.2.b of this Fact Sheet for a description of the data set used for the reasonable potential analysis.
[2] Minimum to maximum range
[3] Lowest reported (or calculated) value
[4] 5 NTU more than 5% of the 24-hour period, 10 NTU at any time.
[5] Highest 7-sample median
[6] Final effluent limitations, which became applicable on 1 November 2008
[7] Final effluent limitations, which became applicable on 19 May 2010

a. **Percent Removal.** The average monthly percent removal of BOD and total suspended solids shall not be less than 90 percent.

b. **Acute Whole Effluent Toxicity.** Survival of aquatic organisms in 96-hour bioassays of undiluted waste shall be no less than:

   i. 70% for any one bioassay; and

   ii. 90% for the median for any three consecutive bioassays.

c. **Total Residual Chlorine.** Effluent total residual chlorine shall not exceed:

   i. 0.01 mg/L, as a 4-day average; and

ii. 0.02 mg/L, as a 1-hour average;

d. **Total Coliform Organisms.** Effluent total coliform organisms shall not exceed:

i. 2.2 most probable number (MPN)/ 100 mL as a 7-day median;

ii. 23 MPN/ 100 mL more than once in any month; and

iii. 240 MPN/ 100 mL at any time.

e. The effluent shall not, as an average monthly EC, exceed the monthly flow-weighted average of EC in the source water plus 500 µmhos/cm, or a total of 1,000 µmhos/cm, whichever is more stringent.

**Table F-3. Historic Discharge Specifications and Monitoring Data at Discharge Point 002**

| Parameter | Units | Discharge Specifications | | Monitoring Data (April 2008–December 2013) | |
|---|---|---|---|---|---|
| | | Average Monthly | Maximum Daily | Highest Average Monthly | Highest Daily |
| Flow | mgd | 0.85 | -- | 0.736 | -- |
| Electrical Conductivity @ 25°C | µmhos/cm | (see below) | -- | 968 | -- |
| Chloride | mg/L | -- | 175 | -- | 28 |
| pH | standard units | -- | 6.5-8.3[1] | -- | 6.8-8.0[1] |
| Biochemical Oxygen Demand (BOD) (5-day @ 20°C) | mg/L | 40 | 80 | 5.3 | 17 |
| Total Suspended Solids (TSS) | mg/L | 40 | 80 | 18 | 23 |
| Settleable Solids | mL/L | 0.2 | 1.0 | ND | ND |

[1] Minimum to maximum range

a. The effluent shall not, as an average monthly EC, exceed the monthly flow-weighted average of EC in the source water plus 500 µmhos/cm, or a total of 1,000 µmhos/cm, whichever is more stringent.

## D. Compliance Summary

The Central Valley Water Board adopted Administrative Civil Liability Order R5-2013-0090 on 25 July 2013, assessing mandatory minimum penalties for violations of effluent limitations contained in Order 99-100 and R5-2008-0033 prior to 1 January 2013. Violations included exceedances of effluent limitations for electrical conductivity, pH, ammonia (as N), bromoform, total coliform, BOD, settleable solids, total suspended solids, and turbidity. The Discharger was also issued Notices of Violation (NOVs) for compliance inspections conducted in March 2009, April 2010, May 2011, and July 2012.

The 2009 inspection report notes that the dissolved air flotation unit and the two secondary sedimentation basins were out of service. The inspection report also notes that the sludge thickener, electronic management and control system, automatic chlorination and dechlorination system, continuous turbidity meters at the filter, and the electronic notification (alarm) system were all out of service. The report notes that the chain to repair the sludge thickener, which had been out of service for one year at that time, was onsite but repairs had not been made. The report notes that due to the electronic management and control system and automatic chlorination and dechlorination system being out of service, Facility personnel were operating the Facility manually. The report also notes that the continuous turbidity meters at the filter were reportedly not in operation because the pump would overheat. Additionally, the report notes that there was no maintenance schedule available, and maintenance records were maintained only for completed work and not for work that needed to be completed. In 2010, staff conducted another compliance inspection, which found all of the issues noted in 2009 were

still true, with the exception of the automatic chlorination and dechlorination system, which was no longer in use because the Discharger had switched to ultraviolet light disinfection. Additionally, Facility personnel indicated the electronic notification system had been fixed but did not know which units were included in the dial-out alarm.

By 2011, the Discharger had repaired or addressed most of the issues, except one secondary sedimentation basin was still out of service and there was still no maintenance schedule available. In 2012, staff conducted another compliance inspection, with staff from State Water Board present. During the inspection, the chief plant operator was on vacation and the operator in charge only had a Grade I certification. The Facility had been classified a Class IV facility four months prior to the inspection. State Water Board staff issued a NOV to the Discharger for failure to provide adequate operations staff. The NOV noted that the chief plant operator needed, at minimum, a Grade IV or V certificate, whereas the current chief plant operator was a Grade III. Additionally, in accordance with Title 23, CCR, at least 50% of operations staff are required to have a Grade II or higher certificate. The Facility, at the time, was employing four operators, three with Grade I certificates and one with a Grade III certificate. The NOV also noted that two operators had recently left, one with a Grade II certificate and one with a Grade I certificate.

Other items noted during all of the inspections were the DO, pH, and chlorine residual sample analyses. In 2009, it was noted that the pH and chlorine residual samples were being sent to the Discharger's contract laboratory, exceeding the 15-minute holding time required by 40 CFR Part 136. In 2010 and 2011, it was noted that the Discharger was now conducting pH and chlorine residual sample analyses onsite; however, based on the sample collection and sample analysis times reported by Facility personnel, the Discharger was still not adhering to the 15-minute sample holding time. During the 2012 inspection, it was noted that, once again, the Discharger was sending pH, chlorine residual, and DO samples for analyses at a contract lab, exceeding the holding time.

On 21 May 2014, the Central Valley Water Board conducted a compliance inspection evaluation of the Facility to determine compliance with Order R5-2008-0033 and also as part of the NPDES permit renewal. The Discharger was found to be in violation of Order R5-2008-0033. The violations included representative samples at the monitoring location for Discharge Point 002 (formerly M-002), sample holding times, and reporting of additional samples. The samples collected at the Discharge Point 002 monitoring location were being collected at the effluent of one secondary sedimentation basin, whereas the Discharger is required to collect samples that are representative of the effluent and volume discharged. The sample holding times exceeded 15 minutes for dissolved oxygen and pH, which were being sent to the contract laboratory for analyses. Lastly, additional samples collected during March 2012 were not included in the calculations or reported in the summary spreadsheet. The inspection also revealed the Discharger may not have been calibrating onsite hand-held meters in accordance with manufacturer's specifications, and did not have a quality assurance/quality control plan for onsite analyses. The Discharger was instructed to determine if onsite the manufacturers of the onsite hand-held meters recommended calibration more often than once per year, and to update its quality assurance/quality control plan for onsite analyses to ensure the Discharger would be in compliance its permit once it began conducting onsite analyses for parameters with short holding times.

A pretreatment compliance inspection was conducted in 2010, and a pretreatment compliance audit/inspection was conducted in January 2014. Both events resulted in Notices of Violation for the Discharger failing to properly implement its pretreatment program.

### E. Planned Changes

The Central Valley Water Board is not aware of any proposed major changes to the Facility.

## III. APPLICABLE PLANS, POLICIES, AND REGULATIONS

The requirements contained in this Order are based on the requirements and authorities described in this section.

### A. Legal Authorities

This Order serves as WDRs pursuant to article 4, chapter 4, division 7 of the California Water Code (Water Code; commencing with section 13260). This Order is also issued pursuant to section 402 of the federal Clean Water Act (CWA) and implementing regulations adopted by the U.S. EPA and chapter 5.5, division 7 of the Water Code (commencing with section 13370). It shall serve as a NPDES permit for point source discharges from this Facility to surface waters.

### B. California Environmental Quality Act (CEQA)

Under Water Code section 13389, this action to adopt a NPDES permit is exempt from the provisions of Chapter 3 of CEQA, (commencing with section 21100) of Division 13 of the Public Resources Code.

### C. State and Federal Laws, Regulations, Policies, and Plans

1. **Water Quality Control Plans.** Requirements of this Order specifically implement the applicable Water Quality Control Plan.

   a. **Basin Plan.** The Central Valley Water Board adopted a *Water Quality Control Plan for the Tulare Lake Basin*, Second Edition, revised January 2004 (hereinafter Basin Plan), that designates beneficial uses, establishes water quality objectives, and contains implementation programs and policies to achieve those objectives for all waters addressed through the plan. Requirements in this Order implement the Basin Plan.

   In addition, the Basin Plan implements State Water Board Resolution 88-63, which established state policy that all waters, with certain exceptions, should be considered suitable or potentially suitable for municipal or domestic supply. Central Canal is a distributary of the Kings River via the Fresno and Fancher Creek Canals, and feeds into other canals and aqueducts to the south and to the west. Central Canal is hydraulically connected to Fresno Slough. Accordingly, Central Canal carries waters of the United States and must be maintained swimmable (REC-1) and fishable (WARM). Additionally, the Canal is used for irrigation deliveries. Thus, beneficial uses applicable to Central Canal are as listed in Table F-4, below.

   Groundwater underlying the Facility and onsite disposal ponds is in the Fresno Detailed Analysis Unit (DAU) No. 233. The beneficial uses of groundwater in this DAU are designated in the Basin Plan and listed in Table F-4, below.

**Table F-4. Basin Plan Beneficial Uses**

| Discharge Point | Receiving Water Name | Beneficial Use(s) |
|---|---|---|
| 001 | Fresno Irrigation District Central Canal | Municipal and domestic supply (MUN), agricultural supply (AGR), water contact recreation (REC-1), and warm freshwater habitat (WARM) |
| 002 | Groundwater | MUN, AGR, industrial service supply (IND), industrial process supply (PRO), REC-1, and non-contact water recreation (REC-2). |

The Basin Plan, at page IV-9, includes a policy to govern waste discharges to navigable waters in the Tulare Lake Basin that states: "*Discharges to surface waters will not be considered a permanent solution when the potential exists for wastewater reclamation.*" The policy also states: "*Discharge to ephemeral streams or to streams that have limited dilution capacity will not be considered a permanent solution unless it is accomplished in*

*such a manner as to safeguard the public health and prevent nuisances, and the wastewater is of such quality that it benefits streamflow augmentation*."

2. **National Toxics Rule (NTR) and California Toxics Rule (CTR).** U.S. EPA adopted the NTR on 22 December 1992, and later amended it on 4 May 1995 and 9 November 1999. About forty criteria in the NTR applied in California. On 18 May 2000, U.S. EPA adopted the CTR. The CTR promulgated new toxics criteria for California and, in addition, incorporated the previously adopted NTR criteria that were applicable in the state. The CTR was amended on 13 February 2001. These rules contain federal water quality criteria for priority pollutants.

3. **State Implementation Policy.** On 2 March 2000, the State Water Board adopted *the Policy for Implementation of Toxics Standards for Inland Surface Waters, Enclosed Bays, and Estuaries of California* (State Implementation Policy or SIP). The SIP became effective on 28 April 2000, with respect to the priority pollutant criteria promulgated for California by the U.S. EPA through the NTR and to the priority pollutant objectives established by the Central Valley Water Board in the Basin Plan. The SIP became effective on 18 May 2000, with respect to the priority pollutant criteria promulgated by the U.S. EPA through the CTR. The State Water Board adopted amendments to the SIP on 24 February 2005 that became effective on 13 July 2005. The SIP establishes implementation provisions for priority pollutant criteria and objectives and provisions for chronic toxicity control. Requirements of this Order implement the SIP.

4. **Antidegradation Policy.** Federal regulations at 40 CFR 131.12 requires that the state water quality standards include an antidegradation policy consistent with the federal policy. The State Water Board established California's antidegradation policy in State Water Board Resolution 68-16 ("Statement of Policy with Respect to Maintaining High Quality of Waters in California"). Resolution 68-16 is deemed to incorporate the federal antidegradation policy where the federal policy applies under federal law. Resolution 68-16 requires that existing water quality be maintained unless degradation is justified based on specific findings. The Central Valley Water Board's Basin Plan implements, and incorporates by reference, both the State and federal antidegradation policies. The permitted discharge must be consistent with the antidegradation provision of 40 CFR 131.12 and State Water Board Resolution 68-16.

5. **Anti-Backsliding Requirements.** Sections 402(o) and 303(d)(4) of the CWA and federal regulations at 40 CFR 122.44(l) restrict backsliding in NPDES permits. These anti-backsliding provisions require that effluent limitations in a reissued permit must be as stringent as those in the previous permit, with some exceptions in which limitations may be relaxed.

6. **Domestic Water Quality.** In compliance with Water Code section 106.3, it is the policy of the State of California that every human being has the right to safe, clean, affordable, and accessible water adequate for human consumption, cooking, and sanitary purposes. This Order promotes that policy by requiring discharges to meet maximum contaminant levels designed to protect human health and ensure that water is safe for domestic use.

7. **Endangered Species Act Requirements.** This Order does not authorize any act that results in the taking of a threatened or endangered species or any act that is now prohibited, or becomes prohibited in the future, under either the California Endangered Species Act (Fish and Game Code, §§ 2050 to 2097) or the Federal Endangered Species Act (16 U.S.C.A. §§ 1531 to 1544). This Order requires compliance with effluent limitations, receiving water limitations, and other requirements to protect the beneficial uses of waters of the state. The Discharger is responsible for meeting all requirements of the applicable Endangered Species Act.

8. **Emergency Planning and Community Right to Know Act.** Section 13263.6(a) of the Water Code, requires that "*The regional board shall prescribe effluent limitations as part of the waste discharge requirements of a POTW for all substances that the most recent toxic chemical release data reported to the state emergency response commission pursuant to Section 313 of the Emergency Planning and Community Right to Know Act of 1986 (42 U.S.C. Sec. 11023) [EPCRA] indicate as discharged into the POTW, for which the state board or the regional board has established numeric water quality objectives, and has determined that the discharge is or may be discharged at a level which will cause, have the reasonable potential to cause, or contribute to, an excursion above any numeric water quality objective.*"

   The most recent toxic chemical data report does not indicate any reportable off-site releases or discharges to the collection system for this Facility. Therefore, a reasonable potential analysis based on information from EPCRA cannot be conducted.

   However, as detailed elsewhere in this Order, available effluent data indicate that there are constituents present in the effluent that have a reasonable potential to cause or contribute to exceedances of water quality standards and require inclusion of effluent limitations based on federal and state laws and regulations.

9. **Storm Water Requirements.** U.S. EPA promulgated federal regulations for storm water on 16 November 1990 in 40 CFR Parts 122, 123, and 124. The NPDES Industrial Storm Water Program regulates storm water discharges from wastewater treatment facilities. Wastewater treatment facilities are applicable industries under the storm water program and are obligated to comply with the federal regulations. The State Water Board Water Quality Order 97-03-DWQ, NPDES General Permit No. CAS000001, Waste Discharge Requirements for Discharges of Storm Water Associated with Industrial Activities Excluding Construction Activities, does not require facilities to obtain coverage if storm water is captured and treated and/or disposed of with the Facility's NPDES permitted process wastewater or if storm water is disposed of in evaporation ponds, percolation ponds, or combined sewer systems. The Discharger captures all storm water that falls onsite. Therefore, coverage under the General Storm Water Permit is not required.

**D. Impaired Water Bodies on CWA 303(d) List**

1. Under section 303(d) of the 1972 CWA, states, territories and authorized tribes are required to develop lists of water quality limited segments. The waters on these lists do not meet water quality standards, even after point sources of pollution have installed the minimum required levels of pollution control technology. On 11 October 2011, U.S. EPA gave final approval to California's 2008-2010 section 303(d) List of Water Quality Limited Segments. The Basin Plan references this list of Water Quality Limited Segments (WQLSs), which are defined as "*those sections of lakes, streams, rivers or other fresh water bodies where water quality does not meet (or is not expected to meet) water quality standards even after the application of appropriate effluent limitations for point sources {40 CFR Part 130, et seq.}.*" The Basin Plan also states, "*Additional treatment beyond minimum federal requirements will be imposed on dischargers to a WQLS. Point source dischargers will be assigned or allocated a maximum allowable load of critical pollutants.*" Central Canal is not listed as a WQLS on the 303(d) list of impaired waterbodies.

2. **Total Maximum Daily Loads (TMDLs).** U.S. EPA requires the Central Valley Water Board to develop TMDLs for each 303(d) listed pollutant and water body combination. No TMDLs are scheduled for Central Canal.

### E. Other Plans, Polices, and Regulations

1. **Title 27, California Code of Regulations (CCR), section 20005 et seq (hereinafter Title 27)**

   a. The treatment and storage facilities associated with the discharge of treated municipal wastewater, except for discharges of residual sludge and solid waste, are exempt from the requirements of Title 27. The exemption of the treatment and storage facilities, pursuant to Title 27, CCR, subsection 20090(a), is based on the following:

      i. The waste consists primarily of domestic sewage and treated effluent;

      ii. The waste discharge requirements are consistent with water quality objectives; and

      iii. The treatment and storage facilities described herein are associated with a municipal wastewater treatment plant.

      The Discharger's treatment and storage facilities, including sludge handling facilities, are exempt from Title 27.

   b. Pursuant to Title 27, CCR, subsection 20090(b), "*[d]ischarges of wastewater to land, including but not limited to evaporation ponds, percolation ponds, or subsurface leachfields [shall be exempt] if the following conditions are met:*

      *(1) the applicable RWQCB has issued WDRs, reclamation requirements, or waived such issuance;*

      *(2) the discharge is in compliance with the applicable [Basin Plan]; and*

      *(3) the wastewater does not need to be managed… as a hazardous waste.*"

      The onsite disposal ponds (Discharge Point 002) may be exempted from Title 27 if they meet the preconditions listed above. The effluent to the ponds meets preconditions (1) and (3). The groundwater monitoring data, however, indicate that precondition (2) may not be met. Additional evaluation is needed to determine whether precondition (2) has been met. The Discharger conducted groundwater monitoring at the Facility. However, there was disagreement between the Discharger and Central Valley Water Board regarding the adequacy of the wells, in particular the adequacy of the upgradient (background) well in depicting regional groundwater conditions. The Discharger reported in early 2014 that all four groundwater monitoring wells had gone dry. Cease and Desist Order R5-2014-XXXX prescribes requirements for the Discharger to install new wells or modify its existing wells to ensure adequate data are collected to determine compliance with Groundwater Limitations V.B in this Order, and to allow the Central Valley Water Board to determine if the groundwater meets precondition (2) in section 20090(b) of Title 27.

## IV. RATIONALE FOR EFFLUENT LIMITATIONS AND DISCHARGE SPECIFICATIONS

Effluent limitations and toxic and pretreatment effluent standards established pursuant to sections 301 (Effluent Limitations), 302 (Water Quality Related Effluent Limitations), 304 (Information and Guidelines), and 307 (Toxic and Pretreatment Effluent Standards) of the CWA and amendments thereto are applicable to the discharge.

The CWA mandates the implementation of effluent limitations that are as stringent as necessary to meet water quality standards established pursuant to state or federal law [33 U.S.C. 1311(b)(1)(C); 40 CFR 122.44(d)(1)]. NPDES permits must incorporate discharge limits necessary to ensure that water quality standards are met. This requirement applies to narrative criteria as well as to criteria specifying maximum amounts of particular pollutants. Pursuant to federal regulations at 40 CFR 122.44(d)(1)(i), NPDES permits must contain limitations that control all pollutants that "*are*

*or may be discharged at a level which will cause, have the reasonable potential to cause, or contribute to an excursion above any state water quality standard, including state narrative criteria for water quality.*" Federal regulations at 40 CFR 122.44(d)(1)(vi), further provide that "*[w]here a State has not established a water quality criterion for a specific chemical pollutant that is present in an effluent at a concentration that causes, has the reasonable potential to cause, or contributes to an excursion above a narrative criterion within an applicable State water quality standard, the permitting authority must establish effluent limits.*"

The CWA requires point source dischargers to control the amount of conventional, non-conventional, and toxic pollutants that are discharged into the waters of the United States. The control of pollutants discharged is established through effluent limitations and other requirements in NPDES permits. There are two principal bases for effluent limitations in the Code of Federal Regulations: 40 CFR 122.44(a) requires that permits include applicable technology-based limitations and standards; and 40 CFR 122.44(d) requires that permits include WQBELs to attain and maintain applicable numeric and narrative water quality criteria to protect the beneficial uses of the receiving water where numeric water quality objectives have not been established. The Basin Plan at page IV-21, contains an implementation policy, "*Application of Water Quality Objectives*", that specifies that the Central Valley Water Board "*will, on a case-by-case basis, adopt numerical limitations in orders which will implement the narrative objectives*." This Policy complies with 40 CFR 122.44(d)(1). With respect to narrative objectives, the Central Valley Water Board must establish effluent limitations using one or more of three specified sources, including: (1) U.S. EPA's published water quality criteria, (2) a proposed state criterion (i.e., water quality objective) or an explicit state policy interpreting its narrative water quality criteria (i.e., the Central Valley Water Board's "*Application of Water Quality Objectives*")(40 CFR 122.44(d)(1)(vi)(A), (B) or (C)), or (3) an indicator parameter.

The Basin Plan includes numeric site-specific water quality objectives and narrative objectives for toxicity, chemical constituents, discoloration, radionuclides, and tastes and odors. The narrative toxicity objective states: "*All waters shall be maintained free of toxic substances in concentrations that produce detrimental physiological responses in human, plant, animal, or aquatic life*." (Basin Plan at page III-6) The Basin Plan states that material and relevant information, including numeric criteria, and recommendations from other agencies and scientific literature will be utilized in evaluating compliance with the narrative toxicity objective. The narrative chemical constituents objective states that waters shall not contain chemical constituents in concentrations that adversely affect beneficial uses. At minimum, "*water designated MUN shall not contain concentrations of chemical constituents in excess of the maximum contaminant levels (MCLs) specified in*" Title 22 of the CCR. The Basin Plan further states that, to protect all beneficial uses, the Central Valley Water Board may apply limits more stringent than MCLs. The narrative tastes and odors objective states: "*Waters shall not contain taste- or odor-producing substances in concentrations that cause nuisance, adversely affect beneficial uses, or impart undesirable tastes or odors to fish flesh or other edible products of aquatic origin or to domestic or municipal water supplies*."

**A. Discharge Prohibitions**

1. **Prohibition III.A (No discharge or application of waste other than that described in this Order).** This prohibition is based on Water Code section 13260 that requires filing of a report of waste discharge (ROWD) before discharges can occur. The Discharger submitted a ROWD for the discharges described in this Order; therefore, discharges not described in this Order are prohibited.
2. **Prohibition III.B (No bypasses or overflow of untreated wastewater, except under the conditions at 40 CFR 122.41(m)(4)).** This Order prohibits bypass pursuant to 40 CFR 122.41(m)(4), with federal allowance for exceptions set forth in Section I.G. of

Attachment D – Federal Standard Provisions. It also prohibits overflows, which concerns release of untreated and partially treated wastewater to surface waters.

3. **Prohibition III.C (No controllable condition shall create a nuisance).** This prohibition is based on Water Code section 13050, which requires water quality objectives be established for the prevention of nuisance within a specific area. The Basin Plan prohibits conditions that create a nuisance. Prohibition III.C. also reflects general situations that, if created, justify cleanup or abatement enforcement activities and assessment of administrative civil liabilities.

4. **Prohibition III.D (No inclusion of pollutant free wastewater shall cause improper operation of the Facility's systems).** This prohibition is based on 40 CFR 122.41 et seq., which requires the proper design and operation of treatment facilities.

5. **Prohibition III.E. (No discharge of waste classified as 'hazardous').** This prohibition concerns a category of waste that is subject to full containment as prescribed by Title 23 and Title 27 of the CCR and, if discharged, has a high potential for creating a condition that would violate Prohibition III.C. as well.

## B. Technology-Based Effluent Limitations

### 1. Scope and Authority

Section 301(b) of the CWA and implementing U.S. EPA permit regulations at 40 CFR 122.44 require that permits include conditions meeting applicable technology-based requirements at a minimum, and any more stringent effluent limitations necessary to meet applicable water quality standards. The discharge authorized by this Order must meet minimum federal technology-based requirements based on Secondary Treatment Standards at 40 CFR Part 133.

Regulations promulgated in 40 CFR 125.3(a)(1) require technology-based effluent limitations for municipal dischargers to be placed in NPDES permits based on Secondary Treatment Standards or Equivalent to Secondary Treatment Standards.

The Federal Water Pollution Control Act Amendments of 1972 (PL 92-500) established the minimum performance requirements for POTWs [defined in section 304(d)(1)]. Section 301(b)(1)(B) of that Act requires that such treatment works must, at a minimum, meet effluent limitations based on secondary treatment as defined by the U.S. EPA Administrator.

Based on this statutory requirement, U.S. EPA developed secondary treatment regulations, which are specified in 40 CFR Part 133. These technology-based regulations apply to all municipal wastewater treatment plants and identify the minimum level of effluent quality attainable by secondary treatment in terms of biochemical oxygen demand ($BOD_5$), total suspended solids (TSS), and pH.

### 2. Applicable Technology-Based Effluent Limitations

#### a. Discharge Point 001

i. **$BOD_5$ and TSS.** Federal regulations at 40 CFR Part 133, establish the minimum weekly and monthly average level of effluent quality attainable by secondary treatment for $BOD_5$ and TSS, for discharges to waters of the United States. In addition, 40 CFR 133.102, in describing the minimum level of effluent quality attainable by secondary treatment, states that the 30-day average percent removal shall not be less than 85 percent. This Order establishes WQBELs that are equal to or more stringent than the secondary treatment technology-based effluent limitations described in 40 CFR Part 133 and are necessary to protect the beneficial uses of the

receiving stream (see Section IV.C.3 of this Fact Sheet for the discussion of WQBELs for pathogens).

ii. **Flow.** The Facility was designed to provide a tertiary level of treatment for up to a design flow of 0.45 mgd. Therefore, this Order contains a discharge flow effluent limitation at Discharge Point 001 of 0.45 mgd.

iii. **pH.** The secondary treatment regulations at 40 CFR Part 133 also require that pH be maintained between 6.0 and 9.0 standard units

**Summary of Technology-based Effluent Limitations**
**Discharge Point 001**

**Table F-5. Summary of Technology-based Effluent Limitations**

| Parameter | Units | Effluent Limitations | | | | |
|---|---|---|---|---|---|---|
| | | Average Monthly | Average Weekly | Maximum Daily | Instantaneous Minimum | Instantaneous Maximum |
| Flow | mgd | 0.45 | -- | -- | -- | -- |
| Biochemical Oxygen Demand 5-day @ 25°C ($BOD_5$) | mg/L | 30 | 45 | -- | -- | -- |
| | % removal | 85 | -- | -- | -- | -- |
| Total Suspended Solids (TSS) | mg/L | 30 | 45 | -- | -- | -- |
| | % removal | 85 | -- | -- | -- | -- |
| pH | standard units | -- | -- | -- | 6.0 | 9.0 |

## C. Water Quality-Based Effluent Limitations (WQBELs)

### 1. Scope and Authority

CWA Section 301(b) and 40 CFR 122.44(d) require that permits include limitations more stringent than applicable federal technology-based requirements where necessary to achieve applicable water quality standards. This Order contains requirements, expressed as a technology equivalence requirement, more stringent than secondary treatment requirements that are necessary to meet applicable water quality standards. The rationale for these requirements, which consist of tertiary treatment, is discussed in section IV.C.3 of this Fact Sheet.

40 CFR 122.44(d)(1)(i) requires that permits include effluent limitations for all pollutants that are or may be discharged at levels that have the reasonable potential to cause or contribute to an exceedance of a water quality standard, including numeric and narrative objectives within a standard. Where reasonable potential has been established for a pollutant, but there is no numeric criterion or objective for the pollutant, water quality-based effluent limitations (WQBELs) must be established using: (1) U.S. EPA criteria guidance under CWA section 304(a), supplemented where necessary by other relevant information; (2) an indicator parameter for the pollutant of concern; or (3) a calculated numeric water quality criterion, such as a proposed state criterion or policy interpreting the state's narrative criterion, supplemented with other relevant information, as provided in 40 CFR 122.44(d)(1)(vi).

The process for determining reasonable potential and calculating WQBELs when necessary is intended to protect the designated uses of the receiving water as specified in the Basin Plan, and achieve applicable water quality objectives and criteria that are contained in other state plans and policies, or any applicable water quality criteria contained in the CTR and NTR.

**2. Applicable Beneficial Uses and Water Quality Criteria and Objectives**

The Basin Plan designates beneficial uses, establishes water quality objectives, and contains implementation programs and policies to achieve those objectives for all waters addressed through the plan. In addition, the Basin Plan implements State Water Board Resolution 88-63, which established state policy that all waters, with certain exceptions, should be considered suitable or potentially suitable for municipal or domestic supply.

The Basin Plan on page II-1 states: "*Protection and enhancement of beneficial uses of water against quality degradation is a basic requirement of water quality planning under the Porter-Cologne Water Quality Control Act. In setting water quality objectives, the Regional Water Board must consider past, present, and probable future beneficial uses of water…*" and with respect to disposal of wastewaters states that "*use of waters for disposal of wastewaters is not included as a beneficial use…and are subject to regulation as activities that may harm protected uses.*"

The federal CWA section 101(a)(2), states: "*it is the national goal that wherever attainable, an interim goal of water quality which provides for the protection and propagation of fish, shellfish, and wildlife, and provides for recreation in and on the water be achieved by July 1, 1983.*" Federal Regulations, developed to implement the requirements of the CWA, create a rebuttable presumption that all waters be designated as fishable and swimmable. Federal regulations at 40 CFR sections 131.2 and 131.10, require that all waters of the State regulated to protect the beneficial uses of public water supply, protection and propagation of fish, shellfish and wildlife, recreation in and on the water, agricultural, industrial and other purposes including navigation. 40 CFR 131.3(e) defines existing beneficial uses as those uses actually attained after 28 November 1975, whether or not they are included in the water quality standards. Federal regulation at 40 CFR 131.10 requires that uses be obtained by implementing effluent limitations, requires that all downstream uses be protected and states that in no case shall a state adopt waste transport or waste assimilation as a beneficial use for any waters of the United States.

a. **Receiving Water and Beneficial Uses.** Refer to III.C.1. above for a complete description of the receiving water and beneficial uses.

b. **Effluent and Ambient Background Data.** The reasonable potential analysis (RPA), as described in section IV.C.3 of this Fact Sheet, was based on data from January 2010 through December 2013 for effluent data at Discharge Point 001 and April 2008 through December 2013 for ambient background data submitted in SMRs, the Report of Waste Discharge (ROWD), and as part of a 13267 Order issued in April 2012. The Discharger reported in December 2009 that it stopped using its chlorine disinfection system and began using its ultraviolet light disinfection system. Other changes to the Facility include repair of a secondary clarifier and the primary clarifier/DAF unit in late January 2011. Staff looked into using effluent data from February 2011 forward; however, staff compared data from before and after the treatment units were repaired and found that concentrations of constituents did not change significantly. Therefore, effluent data prior to February 2011 were used for the reasonable potential analysis.

c. **Conversion Factors.** The CTR contains aquatic life criteria for arsenic, cadmium, chromium III, chromium VI, copper, lead, nickel, silver, and zinc, which are presented in dissolved concentrations. U.S. EPA recommends conversion factors to translate dissolved concentrations to total concentrations. The default U.S. EPA conversion factors contained in Appendix 3 of the SIP were used to convert the applicable dissolved criteria to total recoverable criteria.

d. **Hardness-Dependent CTR Metals Criteria.** The *California Toxics Rule* and the *National Toxics Rule* contain water quality criteria for seven metals that vary as a function of hardness. The lower the hardness, the lower the water quality criteria. The metals with hardness-dependent criteria include cadmium, copper, chromium III, lead, nickel, silver, and zinc.

This Order has established the criteria for hardness-dependent metals based on the reasonable worst-case ambient hardness as required by the SIP[1] and the CTR[2]. The SIP and the CTR require the use of "receiving water" or "actual ambient" hardness, respectively, to determine effluent limitations for these metals. (SIP, § 1.2; 40 CFR 131.38(c)(4)) The CTR requires that the hardness values used shall be consistent with the design discharge conditions for design flows and mixing zones.[3] Where design flows for aquatic life criteria include the lowest one-day flow with an average reoccurrence frequency of once in ten years (1Q10) and the lowest average seven consecutive day flow with an average reoccurrence frequency of once in ten years (7Q10).[4] The CTR also requires that when mixing zones are allowed, the CTR criteria apply at the edge of the mixing zone, otherwise the criteria apply throughout the water body including at the point of discharge.[5] The CTR does not define whether the term "ambient," as applied in the regulations, necessarily requires the consideration of upstream as opposed to downstream hardness conditions.

The State Water Board provided direction regarding the selection of hardness in two precedential water quality orders; WQO 2008-0008 for the City of Davis Wastewater Treatment Plant and WQO 2004-0013 for the Yuba City Wastewater Treatment Plant. The State Water Board recognized that the SIP and the CTR do not discuss the manner in which hardness is to be ascertained, and, thus, Regional Water Boards have considerable discretion in determining ambient hardness. (Davis Order, p.10) The State Water Board explained that it is necessary that, "*The [hardness] value selected should provide protection for all times of discharge under varying hardness conditions.*" (Yuba City Order, p. 8). The Davis Order also provides that, "*Regardless of the hardness used, the resulting limits must always be protective of water quality criteria under all flow conditions.*" (Davis Order, p. 11)

The equation describing the total recoverable regulatory criterion, as established in the CTR[6], is as follows:

$$\text{CTR Criterion} = \text{WER} \times (e^{m[\ln(H)]+b}) \qquad \text{(Equation 1)}$$

Where:

H = ambient hardness (as $CaCO_3$)[7]

WER = water-effects ratio

m, b = metal- and criterion-specific constants

[1] The SIP does not address how to determine the hardness for application to the equations for the protection of aquatic life when using hardness-dependent metals criteria. It simply states, in Section 1.2, that the criteria shall be properly adjusted for hardness using the hardness of the receiving water.

[2] The CTR requires that, for waters with a hardness of 400 mg/L (as $CaCO_3$), or less, the actual ambient hardness of the surface water must be used.

[3] 40 CFR 131.38-(c)(4)(ii)

[4] 40 CFR 131.38-(c)(42)(iii) Table 4

[5] 40 CFR 131.38-(c)(2)(i)

[6] 40 CFR 131.38(b)(2).

[7] For this discussion all hardness values are measured as $CaCO_3$.

The upstream receiving water hardness varied from 7.4 mg/L to 130 mg/L, based on 13 samples from 3 September 2009 to 9 July 2013. Only one downstream receiving water value is available, and was reported as 9.4 mg/L on 9 July 2013, which is during the period of irrigation deliveries. During portions of the year, however, Central Canal is effluent dominated, so the downstream ambient hardness that is consistent with the design low flow conditions is equivalent to the effluent hardness because the effluent is, in effect, the ambient surface water under these regularly occurring conditions. The effluent hardness varied from 85 mg/L to 180 mg/L, based on 19 samples from 10 August 2010 to 9 July 2013.

For calculating the CTR criteria the downstream ambient hardness has been used. The SIP, CTR, and State Water Board do not require use of the minimum observed ambient hardness in the CTR equations. The hardness used must be consistent with design conditions and protective of water quality criteria under all flow conditions. The minimum effluent hardness of 85 mg/L represents the downstream ambient hardness under the design condition, and the downstream ambient hardness was considered for use in the CTR equations.

A downstream ambient hardness of 85 mg/L results in CTR criteria that are protective of aquatic life under all flow conditions for copper, zinc, chromium III, nickel, and cadmium (chronic). However, for lead, silver, and cadmium (acute), using this hardness to calculate the CTR criteria is protective during the effluent dominated condition, but lower criteria are necessary to be fully protective of aquatic life under higher flow conditions in the receiving water.

The Facility discharges both hardness and metals, which must be considered in the downstream ambient receiving water to ensure the criteria are protective under all flow conditions. The tables below examine how the downstream ambient conditions change with varying mixtures of effluent and upstream receiving water. The calculations determine whether or not toxicity could result from one or more metals using the selected design ambient hardness to calculate the CTR criteria.

A simple mass balance (Equation 2) is used to model the ambient concentrations of hardness and metals in the receiving water downstream of the discharge for all possible mixtures of effluent and upstream receiving water under all flow conditions.

$$C_{downstream} = C_{upstream} \times (1\text{-}MIX) + C_{effluent} \times (MIX) \qquad \text{(Equation 2)}$$ [8]

Where:

$C_{downstream}$ = Downstream receiving water concentration

$C_{upstream}$ = Upstream receiving water concentration

$C_{effluent}$ = Effluent concentration

MIX = Fraction of effluent in downstream ambient receiving water

For each of several downstream ambient mixtures of upstream receiving water and effluent, the potential for toxicity is examined. The hardness of the mixture is calculated, and the resultant water quality criterion is calculated from the CTR equation (Equation 1). The metals concentration is also calculated for the mixture of upstream receiving water and effluent. If the metals concentration complies with the CTR criterion for that mixture, the ambient mixture is not toxic and “Yes” is indicated in the far right column. If the metals concentration exceeds the CTR criterion for that mixture, the

[8] U.S. EPA NPDES Permit Writers’ Manual, September 2010 (EPA-833-K-10-001)

ambient concentration is toxic and "No" is indicated in the far right column. The results of these evaluations are summarized in Table F-15.

For this evaluation, the following conservative assumptions have been made:

- Upstream receiving water at the lowest observed upstream receiving water hardness (i.e., 7.4 mg/L)
- No assimilative capacity for each metal in the upstream receiving water (i.e., metals concentration equal to CTR criterion calculated using a hardness of 7.4 mg/L)
- Effluent hardness at the lowest observed effluent hardness of 85 mg/L

Table F-6, below, is an example for lead where a design ambient hardness of 85 mg/L (i.e., downstream receiving water hardness at design low flow conditions) was used to calculate the CTR criteria. In this example, the mixed downstream ambient lead concentrations exceed the mixed CTR criteria at some mixtures. This example demonstrates that using a design ambient hardness of 85 mg/L to calculate the CTR criteria for lead is not fully protective under the reasonable worst-case conditions described above. The CTR criteria for silver and cadmium (acute) act in the same manner as lead. Tables similar to Table F-6 are not provided in this discussion for these metals, but the results are similarly non-compliant with the CTR criteria. Based on the conservative assumptions discussed above, an iterative method was used to determine the applicable design ambient hardness that results in fully protective criteria for lead, silver, and cadmium (acute).

**Table F-6. Lead Evaluation (Design Ambient Hardness = 85 mg/L)**

| | | | | | |
|---|---|---|---|---|---|
| | | | | **Assumed Upstream Receiving Water Lead Concentration** | **0.12 µg/L[1]** |
| | | | | **Lead Chronic Criterion[2]** | **2.6 µg/L** |
| **Mix[6]** | | **Fully Mixed Downstream Ambient Concentration** | | | |
| | | **Hardness[3] (mg/L)** | **CTR Criteria[4] (µg/L)** | **Lead[5] (µg/L)** | **Complies with CTR Criteria?** |
| High Flow ↓ Low Flow | 1% | 8.2 | 0.13 | 0.14 | **No** |
| | 5% | 11 | 0.20 | 0.24 | **No** |
| | 15% | 19 | 0.39 | 0.49 | **No** |
| | 25% | 27 | 0.60 | 0.74 | **No** |
| | 50% | 46 | 1.2 | 1.4 | **No** |
| | 75% | 66 | 1.9 | 2.0 | **No** |
| | 100% | 85 | 2.6 | 2.6 | **Yes** |

The following tables (F-7 through F-14) demonstrate that the selected design ambient hardness used to calculate the CTR criteria result in protective criteria for all flow conditions (i.e., the mixed downstream ambient metals concentrations do not exceed the CTR criteria). Table F-15 summarizes the design ambient hardness for each metal.

**Table F-7. Lead Evaluation (Design Ambient Hardness = 61 mg/L)**

| | | | | | |
|---|---|---|---|---|---|
| **Assumed Upstream Receiving Water Lead Concentration** | | | | | **0.12 µg/L[1]** |
| **Lead Chronic Criterion[2]** | | | | | **1.7 µg/L** |
| **Mix[6]** | | **Fully Mixed Downstream Ambient Concentration** | | | |
| | | **Hardness[3] (mg/L)** | **CTR Criteria[4] (µg/L)** | **Lead[5] (µg/L)** | **Complies with CTR Criteria?** |
| High Flow ↓ Low Flow | 1% | 8.2 | 0.13 | 0.13 | **Yes** |
| | 5% | 11 | 0.20 | 0.19 | **Yes** |
| | 15% | 19 | 0.39 | 0.35 | **Yes** |
| | 25% | 27 | 0.60 | 0.51 | **Yes** |
| | 50% | 46 | 1.2 | 0.91 | **Yes** |
| | 75% | 66 | 1.9 | 1.3 | **Yes** |
| | 100% | 85 | 2.6 | 1.7 | **Yes** |

**Table F-8. Copper Evaluation (Design Ambient Hardness = 85 mg/L)**

| | | | | | |
|---|---|---|---|---|---|
| **Assumed Upstream Receiving Water Copper Concentration** | | | | | **1.0 µg/L[1]** |
| **Copper Chronic Criterion[2]** | | | | | **8.1 µg/L** |
| **Mix[6]** | | **Fully Mixed Downstream Ambient Concentration** | | | |
| | | **Hardness[3] (mg/L)** | **CTR Criteria[4] (µg/L)** | **Copper[5] (µg/L)** | **Complies with CTR Criteria?** |
| High Flow ↓ Low Flow | 1% | 8.2 | 1.1 | 1.1 | **Yes** |
| | 5% | 11 | 1.4 | 1.4 | **Yes** |
| | 15% | 19 | 2.3 | 2.1 | **Yes** |
| | 25% | 27 | 3.0 | 2.8 | **Yes** |
| | 50% | 46 | 4.8 | 4.6 | **Yes** |
| | 75% | 66 | 6.5 | 6.3 | **Yes** |
| | 100% | 85 | 8.1 | 8.1 | **Yes** |

**Table F-9. Chromium III Evaluation (Design Ambient Hardness = 85 mg/L)**

| | | | | | |
|---|---|---|---|---|---|
| **Assumed Upstream Receiving Water Chromium III Concentration** | | | | | **25 µg/L[1]** |
| **Chromium III Chronic Criterion[2]** | | | | | **180 µg/L** |
| **Mix[6]** | | **Fully Mixed Downstream Ambient Concentration** | | | |
| | | **Hardness[3] (mg/L)** | **CTR Criteria[4] (µg/L)** | **Chromium III[5] (µg/L)** | **Complies with CTR Criteria?** |
| High Flow ↓ Low Flow | 1% | 8.2 | 27 | 26 | **Yes** |
| | 5% | 11 | 35 | 32 | **Yes** |
| | 15% | 19 | 53 | 48 | **Yes** |
| | 25% | 27 | 70 | 63 | **Yes** |
| | 50% | 46 | 110 | 102 | **Yes** |
| | 75% | 66 | 147 | 141 | **Yes** |
| | 100% | 85 | 181 | 180 | **Yes** |

**Table F-10. Cadmium (Chronic) Evaluation (Design Ambient Hardness = 85 mg/L)**

| | | | | | |
|---|---|---|---|---|---|
| **Assumed Upstream Receiving Water Cadmium Concentration** | | | | | **0.32 µg/L[1]** |
| **Cadmium Chronic Criterion[2]** | | | | | **2.2 µg/L** |
| **Mix[6]** | | **Fully Mixed Downstream Ambient Concentration** | | | |
| | | **Hardness[3] (mg/L)** | **CTR Criteria[4] (µg/L)** | **Cadmium[5] (µg/L)** | **Complies with CTR Criteria?** |
| High Flow ↓ Low Flow | 1% | 8.2 | 0.34 | 0.34 | **Yes** |
| | 5% | 11 | 0.44 | 0.41 | **Yes** |
| | 15% | 19 | 0.67 | 0.60 | **Yes** |
| | 25% | 27 | 0.88 | 0.79 | **Yes** |
| | 50% | 46 | 1.3 | 1.3 | **Yes** |
| | 75% | 66 | 1.8 | 1.7 | **Yes** |
| | 100% | 85 | 2.2 | 2.2 | **Yes** |

**Table F-11. Cadmium (Acute) Evaluation (Design Ambient Hardness = 72 mg/L)**

| | | | | | |
|---|---|---|---|---|---|
| **Assumed Upstream Receiving Water Cadmium Concentration** | | | | | **0.24 µg/L[1]** |
| **Cadmium Acute Criterion[2]** | | | | | **3.1 µg/L** |
| **Mix[6]** | | **Fully Mixed Downstream Ambient Concentration** | | | |
| | | **Hardness[3] (mg/L)** | **CTR Criteria[4] (µg/L)** | **Cadmium[5] (µg/L)** | **Complies with CTR Criteria?** |
| High Flow ↓ Low Flow | 1% | 8.2 | 0.27 | 0.27 | **Yes** |
| | 5% | 11 | 0.39 | 0.38 | **Yes** |
| | 15% | 19 | 0.70 | 0.67 | **Yes** |
| | 25% | 27 | 1.0 | 1.0 | **Yes** |
| | 50% | 46 | 1.9 | 1.7 | **Yes** |
| | 75% | 66 | 2.8 | 2.4 | **Yes** |
| | 100% | 85 | 3.8 | 3.1 | **Yes** |

**Table F-12. Nickel Evaluation (Design Ambient Hardness = 85 mg/L)**

| | | | | | |
|---|---|---|---|---|---|
| **Assumed Upstream Receiving Water Nickel Concentration** | | | | | **5.8 µg/L[1]** |
| **Nickel Chronic Criterion[2]** | | | | | **45 µg/L** |
| **Mix[6]** | | **Fully Mixed Downstream Ambient Concentration** | | | |
| | | **Hardness[3] (mg/L)** | **CTR Criteria[4] (µg/L)** | **Nickel[5] (µg/L)** | **Complies with CTR Criteria?** |
| High Flow ↓ Low Flow | 1% | 8.2 | 6.3 | 6.2 | **Yes** |
| | 5% | 11 | 8.2 | 7.7 | **Yes** |
| | 15% | 19 | 13 | 12 | **Yes** |
| | 25% | 27 | 17 | 16 | **Yes** |
| | 50% | 46 | 27 | 25 | **Yes** |
| | 75% | 66 | 37 | 35 | **Yes** |
| | 100% | 85 | 45 | 45 | **Yes** |

**Table F-13. Silver (Acute) Evaluation (Design Ambient Hardness = 41 mg/L)**

| | | | | | |
|---|---|---|---|---|---|
| **Assumed Upstream Receiving Water Silver Concentration** | | | | | **0.046 µg/L[1]** |
| **Silver Acute Criterion[2]** | | | | | **0.88 µg/L** |
| **Mix[6]** | | **Fully Mixed Downstream Ambient Concentration** | | | |
| | | **Hardness[3] (mg/L)** | **CTR Criteria[4] (µg/L)** | **Silver[5] (µg/L)** | **Complies with CTR Criteria?** |
| High Flow ↓ Low Flow | 1% | 8.2 | 0.055 | 0.054 | **Yes** |
| | 5% | 11 | 0.10 | 0.088 | **Yes** |
| | 15% | 19 | 0.23 | 0.17 | **Yes** |
| | 25% | 27 | 0.42 | 0.25 | **Yes** |
| | 50% | 46 | 1.1 | 0.46 | **Yes** |
| | 75% | 66 | 2.0 | 0.67 | **Yes** |
| | 100% | 85 | 3.1 | 0.88 | **Yes** |

**Table F-14. Zinc Evaluation (Design Ambient Hardness = 85 mg/L)**

| | | | | | |
|---|---|---|---|---|---|
| **Assumed Upstream Receiving Water Zinc Concentration** | | | | | **13 µg/L[1]** |
| **Zinc Chronic Criterion[2]** | | | | | **100 µg/L** |
| **Mix[6]** | | **Fully Mixed Downstream Ambient Concentration** | | | |
| | | **Hardness[3] (mg/L)** | **CTR Criteria[4] (µg/L)** | **Zinc[5] (µg/L)** | **Complies with CTR Criteria?** |
| High Flow ↓ Low Flow | 1% | 8.2 | 14 | 14 | **Yes** |
| | 5% | 11 | 19 | 18 | **Yes** |
| | 15% | 19 | 29 | 26 | **Yes** |
| | 25% | 27 | 39 | 35 | **Yes** |
| | 50% | 46 | 62 | 57 | **Yes** |
| | 75% | 66 | 84 | 78 | **Yes** |
| | 100% | 85 | 104 | 100 | **Yes** |

Footnotes for CTR Hardness-dependent Metals Tables (F-6 through F-14):

1 Highest assumed upstream receiving water metals concentration calculated using CTR equation (Equation 1) for chronic/acute criterion at a hardness of 7.4 mg/L.

2 CTR criteria calculated using CTR equation (Equation 1) for chronic/acute criterion at the design ambient hardness for the particular metal (see Table F-15).

3 Mixed downstream ambient hardness is the mixture of the receiving water and effluent hardness at the applicable mixture using Equation 2.

4 Mixed downstream ambient criteria are the chronic/acute criteria calculated using the CTR equation (Equation 1) at the mixed hardness.

5 Mixed downstream ambient metals concentration is the mixture of the receiving water and effluent metals concentrations at the applicable mixture using Equation 2.

6 The mixture percentage represents the fraction of effluent in the downstream ambient receiving water. The mixture ranges from 1% at the high receiving water flow condition, to 100% at the lowest receiving water flow condition (i.e., effluent dominated).

The applicable design ambient hardness and CTR criteria for the hardness-dependent metals for which toxicity in ambient waters does not occur are as follows in Table F-15.

**Table F-15. Summary of Design Ambient Hardness and CTR Criteria for Hardness-dependent Metals**

| CTR Metals | Design Ambient Hardness (mg/L) | CTR Criteria (µg/L, total recoverable)[1] | |
|---|---|---|---|
| | | acute | chronic |
| Copper | 85 | 12 | 8.1 |
| Chromium (III) | 85 | 1500 | 180 |
| Cadmium | 72 (acute)<br>85 (chronic) | 3.1 | 2.2 |
| Lead | 61 | 44 | 1.7 |
| Nickel | 85 | 410 | 45 |
| Silver | 41 | 0.88 | -- |
| Zinc | 85 | 100 | 100 |

[1] Metals criteria rounded to two significant figures in accordance with the CTR.

### 3. Determining the Need for WQBELs

a. **Constituents with No Reasonable Potential.** WQBELs are not included in this Order for constituents that do not demonstrate reasonable potential (i.e., constituents that were not detected in the effluent or receiving water at or above criteria/objectives). However, monitoring for those pollutants is established in this Order as required by the SIP. If the results of effluent monitoring demonstrate reasonable potential, this Order may be reopened and modified by adding appropriate effluent limitations.

Most constituents with no reasonable potential are not discussed in this Order. However, the following constituents were found to have no reasonable potential after assessment of the data:

i. **Bromoform**

(a) **WQO.** The CTR includes a criterion of 4.3 µg/L for bromoform for the protection of human health for waters from which both water and organisms are consumed. Order R5-2008-0033 established an average monthly effluent limitation (AMEL) of 4.3 µg/L and a maximum daily effluent limitation (MDEL) of 8.6 µg/L at Discharge Point 001, based on the CTR criterion.

(b) **RPA Results.** Bromoform was not detected in the effluent between January 2010 and December 2013, based on 26 samples. Bromoform was also not detected in the receiving water, based on three samples. Bromoform is a chlorine disinfection by-product, and the Discharger no longer uses chlorine for disinfection. The effluent limitations for bromoform have not been retained. Removal of these effluent limitations is in accordance with federal anti-backsliding regulations (see section IV.E.3 of the Fact Sheet). However, this Order still requires the Discharger to monitor for bromoform with the annual priority pollutant monitoring event.

ii. **Cadmium**

(a) **WQO.** The CTR includes hardness-dependent criteria for the protection of freshwater aquatic life for cadmium. These criteria for cadmium are presented in dissolved concentrations, as short-term acute and 4-day chronic criteria. U.S. EPA recommends conversion factors to translate dissolved concentrations to total concentrations. Default U.S. EPA translators were used for the receiving water and effluent.

(b) **RPA Results.** Section IV.C.2 of this Fact Sheet includes procedures for conducting the RPA for hardness-dependent CTR metals, such as cadmium. The table below shows the specific criteria used for the RPA.

| | CTR Chronic Criterion (Total Recoverable) | Maximum Concentration (Total Recoverable) | Reasonable Potential? (Y/N) |
|---|---|---|---|
| Upstream Receiving Water | 0.32 µg/L[1] | ND (<0.2 µg/L) | No[3] |
| ~~Effluent~~Design Ambient Hardness | 2.2 µg/L[2] | ND (<0.2 µg/L) | No |

[1] Based on lowest observed upstream receiving water hardness of 7.4 mg/L (as $CaCO_3$)
[2] Based on ~~lowest observed effluent~~ the design ambient hardness of 85 mg/L (as $CaCO_3$)
[3] See discussion below
ND = Non-detect

Section 1.2 of the SIP states, "*the RWQCB shall have discretion to consider if any data are inappropriate… for use in implementing this Policy.*" The highest reported concentrations in the effluent and receiving water were 0.53 µg/L and 0.55 µg/L, respectively. However, both of these samples were reported as estimated concentrations. All of the samples for the effluent and receiving water that had reportable concentrations were reported as estimated concentrations. Estimated concentrations do not provide an adequate level of scientific certainty to use as evidence that the effluent or receiving water cadmium concentrations are above criteria. Therefore, the Central Valley Water Board finds that the sample results are inappropriate and did not use the data in conducting the RPA. Based on the remaining data, the discharge does not have reasonable potential to cause or contribute to an exceedance of water quality criteria. However, this Order still requires the Discharger to monitor for cadmium with the annual priority pollutant monitoring event, and requires the Discharger to meet the lowest applicable minimum level in the State Implementation Policy.

iii. **Chlorine Residual**

(a) **WQO.** U.S. EPA developed National Recommended Ambient Water Quality Criteria (NAWQC) for protection of freshwater aquatic life for chlorine residual. The recommended 4-day average (chronic) and 1-hour average (acute) criteria for chlorine residual are 0.011 mg/L and 0.019 mg/L, respectively. These criteria are protective of the Basin Plan's narrative toxicity objective. Order R5-2008-0033 established a 4-day average effluent limitation of 0.01 mg/L and a 1-hour average effluent limitation of 0.02 mg/L at Discharge Point 001, based on the NAWQC.

(b) **RPA Results.** Total residual chlorine was not detected in the effluent between January 2010 and December 2013. The Discharger no longer uses chlorine for disinfection, and the effluent limitations have not been retained in this Order. Removal of these effluent limitations is in accordance with federal anti-backsliding regulations (see section IV.E.3 of this Fact Sheet).

iv. **Chlorodibromomethane (Dibromochloromethane)**

(a) **WQO.** The CTR includes a criterion of 0.41 µg/L for chlorodibromomethane for the protection of human health for waters from which both water and organisms are consumed. Order R5-2008-0033 established an AMEL of 0.41 µg/L of a MDEL of 0.82 µg/L at Discharge Point 001, based on the CTR criterion.

(b) **RPA Results.** Chlorodibromomethane was not detected in the effluent between January 2010 and December 2013, based on 26 samples. Chlorodibromomethane was also not detected in the receiving water based on three samples. Chlorodibromomethane is a chlorine disinfection by-product, and the Discharger no longer uses chlorine disinfection. The effluent limitations for chlorodibromomethane have not been retained. Removal of these effluent limitations is in accordance with federal anti-backsliding regulations (see section IV.E.3 of the Fact Sheet). However, this Order still requires the Discharger to monitor for chlorodibromomethane with the annual priority pollutant monitoring event.

v. **Dichlorobromomethane (Bromodichloromethane)**

(a) **WQO.** The CTR includes a criterion of 0.56 µg/L for dichlorobromomethane for the protection of human health for waters from which both water and organisms are consumed. Order R5-2008-0033 established an AMEL of 0.56 µg/L and a MDEL of 1.1 µg/L at Discharge Point 001, based on the CTR criterion.

(b) **RPA Results.** Dichlorobromomethane was not detected in the effluent between January 2010 and December 2013, based on 26 samples. Dichlorobromomethane was also not detected in the receiving water based on three samples. Dichlorobromomethane is a chlorine disinfection by-product, and the Discharger no longer uses chlorine disinfection. The effluent limitations for dichlorobromomethane have not been retained. Removal of these effluent limitations is in accordance with federal anti-backsliding regulations (see section IV.E.3 of the Fact Sheet). However, this Order still requires the Discharger to monitor for dichlorobromomethane with the annual priority pollutant monitoring event.

vi. **Fluoride**

(a) **WQO.** CDPH has adopted a Primary MCL for fluoride of 2.0 mg/L, which is protective of the Basin Plan's chemical constituent objective. The Primary MCL is based on the average of samples collected over a calendar year.

(b) **RPA Results.** The MEC for fluoride was 2.7 mg/L (out of 22 samples) and highest calendar year average was 2.05 mg/L (based on two samples), while the maximum observed upstream receiving water concentration was 1.2 mg/L. Order R5-2008-0033 included a discussion indicating that fluoride in the effluent might have reasonable potential to cause or contribute to an exceedance of water quality objectives. The discussion compared the MEC to the agricultural objective for fluoride in *Water Quality for Agriculture,* Food and Agriculture Organization of the United Nations—Irrigation and Drainage Paper No. 29, Revision 1 (R.S. Ayers and D.W. Westcot, Rome, 1985). However, Order R5-2008-0033 indicated additional data were needed because the data set at the time consisted of only two effluent samples. This Order does not use the Ayers and Westcot objective for determining reasonable potential. However, based on the effluent data, and using only two significant figures to evaluate the data,

fluoride in the discharge does not have a reasonable potential to cause or contribute to an in-stream excursion above the primary MCL.

vii. **Lead**

(a) **WQO.** The CTR includes hardness-dependent criteria for the protection of freshwater aquatic life for lead. These criteria for lead are presented in dissolved concentrations, as short-term acute criteria and 4-day chronic criteria. U.S. EPA recommends conversion factors to translate dissolved concentrations to total concentrations. Default U.S. EPA translators were used for the receiving water and effluent.

(b) **RPA Results.** Section IV.C.2 of this Fact Sheet includes procedures for conducting the RPA for hardness-dependent CTR metals, such as lead. The table below shows the specific criteria used for the RPA.

| | CTR Chronic Criterion (Total Recoverable) | Maximum Concentration (Total Recoverable) | Reasonable Potential? (Y/N) |
|---|---|---|---|
| Upstream Receiving Water | 0.12 µg/L[1] | ND (<1.4 µg/L) | No[3] |
| ~~Effluent~~Design Ambient Hardness | 1.7 µg/L[2] | ND (<1.4 µg/L) | No[3] |

[1] Based on lowest observed upstream receiving water hardness of 7.4 mg/L (as $CaCO_3$)
[2] Based on ~~lowest observed effluent~~the design ambient hardness of ~~85~~ 61 mg/L (as $CaCO_3$)~~ and the lowest observed upstream receiving water hardness of 7.4 mg/L (as $CaCO_3$)~~
[3] See discussion below
ND = Non-detect

Section 1.2 of the SIP states, "*the RWQCB shall have discretion to consider if any data are inappropriate… for use in implementing this Policy.*" The highest reported lead concentration in the effluent was 5 µg/L and in the receiving water was 4.4 µg/L (as an estimated concentration). The laboratory report for the sample analysis on the date the 5 µg/L value was reported indicates lead was detected in the method blank. The remaining effluent samples with reportable concentrations of lead were reported as estimated concentrations. All of the receiving water samples with reportable concentrations of lead were also reported as estimated concentrations. Estimated concentrations do not provide an adequate level of scientific certainty to use as evidence that the effluent or receiving water lead concentrations are above criteria. Therefore, the Central Valley Water Board finds that the sample results for the effluent and receiving water are inappropriate and did not use the data in conducting the RPA. Based on the remaining data, the discharge does not have reasonable potential to cause or contribute to an exceedance of water quality criteria. However, this Order still requires the Discharger to monitor for lead with the annual priority pollutant monitoring event, and requires the Discharger to meet the lowest applicable minimum level in the State Implementation Policy.

viii. **Mercury**

(a) **WQO.** The CTR includes a criterion of 0.050 µg/L for mercury for the protection of human health for waters from which both water and organisms are consumed.

(b) **RPA Results.** The MEC for mercury was 0.0035 µg/L, as a quantified concentration. Mercury bioaccumulates in fish tissue and, therefore, the discharge of mercury to the receiving water may contribute to exceedances of the narrative toxicity objective and impact beneficial uses.

Section 1.2 of the SIP states, "*the RWQCB shall have discretion to consider if any data are inappropriate… for use in implementing this Policy*." The highest reported concentrations in the effluent and receiving water were 0.33 µg/L and 0.26 µg/L, respectively. However, both of these samples were collected and analyzed on the same date, and the contract laboratory reported the method blank contained an estimated concentration of 0.198 µg/L. Based on the information available, staff determined that the reported concentrations of mercury may not be representative of the effluent discharge and receiving water conditions due to the detections in the method blank. Therefore, the Central Valley Water Board finds that the sample results are inappropriate and did not use the data in conducting the RPA. Based on the remaining data, the discharge does not have reasonable potential to cause or contribute to an exceedance of water quality criteria. However, this Order still requires the Discharger to monitor for mercury with the annual priority pollutant monitoring event, and requires the Discharger use clean hands/dirty hands sample collection techniques to ensure that mercury samples are collected in a way that the data will not be invalid.

ix. **Persistent Chlorinated Hydrocarbon Pesticides**

(a) **WQO.** The Basin Plan requires that no individual pesticides shall be present in concentrations that adversely affect beneficial uses; discharges shall not result in pesticide concentrations in bottom sediments or aquatic life that adversely affect beneficial uses; persistent chlorinated hydrocarbon pesticides shall not be present in the water column at detectable concentrations; and pesticide concentrations shall not exceed those allowable by applicable antidegradation policies. Persistent chlorinated hydrocarbon pesticides include aldrin; alpha-BHC; beta-BHC; chlordane; 4,4-DDT; 4,4-DDE; 4,4-DDD; delta-BHC; dieldrin; alpha-endosulfan (endosulfan I); beta-endosulfan (endosulfan II); endosulfan sulfate; endrin; endrin aldehyde; gamma-BHC (lindane); heptachlor; heptachlor epoxide; and toxaphene. The CTR includes criteria for each persistent chlorinated hydrocarbon pesticide.

(b) **RPA Results.** Aldrin, alpha-BHC, alpha-endosulfan, and heptachlor were detected in the effluent. Alpha-BHC, alpha-endosulfan, and heptachlor were detected once in the effluent on the same date, and aldrin was detected once in the effluent on a different date. Aldrin and heptachlor were reported as detected but not quantified (estimated) concentrations. The California Department of Pesticide Regulation does not list any registered products that contain heptachlor, aldrin, or BHC. Endosulfan uses are scheduled to end 31 July 2016, with a voluntary cancellation program that began on 31 July 2012. Endosulfan is used as a crop insecticide and has not been produced in the U.S. since 1982.

Section 1.2 of the SIP states, "*the RWQCB shall have discretion to consider if any data are inappropriate… for use in implementing this Policy*." Based on the information available (most of the detections were on the same day, no other detections occurred, most uses have been cancelled), staff determined that the reported concentrations of the pesticides were likely false-positives and the results are not representative of the effluent discharge. Therefore, the Central Valley Water Board finds that the sample results are inappropriate and did not

use the data in conducting the RPA. Based on the remaining data, the discharge does not have reasonable potential to cause or contribute to an exceedance of water quality criteria. However, this Order still requires the Discharger to monitor for pesticides with the annual priority pollutant monitoring event, and requires the Discharger to meet the lowest applicable minimum level in the State Implementation Policy.

x. **Selenium**

(a) **WQO.** The CTR includes a maximum 4-day average criterion of 5.0 µg/L for total recoverable selenium for the protection of freshwater aquatic life.

(b) **RPA Results.** The maximum effluent concentration (MEC) for selenium was 2.6 µg/L while the maximum observed upstream receiving water concentration was 2.9 µg/L. Section 1.2 of the SIP states, "*the RWQCB shall have discretion to consider if any data are inappropriate… for use in implementing this Policy*." The highest reported concentration in the effluent was 7.7 µg/L but was reported as an estimated concentration. Two other effluent samples were also reported above the criterion but were also estimated concentrations. Estimated concentrations do not provide an adequate level of scientific certainty to use as evidence that the effluent selenium concentrations are above the criterion. Therefore, the Central Valley Water Board finds that the sample results are inappropriate and did not use the data in conducting the RPA. Based on the remaining data, the discharge does not have reasonable potential to cause or contribute to an exceedance of water quality criteria. However, this Order still requires the Discharger to monitor for selenium with the annual priority pollutant monitoring event, and requires the Discharger to meet the lowest applicable minimum level in the State Implementation Policy.

xi. **Settleable Solids**

(a) **WQO.** For inland surface waters, the Basin Plan states that "*[w]ater shall not contain substances in concentrations that result in the deposition of material that causes nuisance or adversely affects beneficial uses.*" Order R5-2008-0033 established an AMEL of 0.1 mL/L and a MDEL of 0.2 mL/L at Discharge Point 001, based on the Basin Plan objective.

(b) **RPA Results.** Settleable solids were not detected in the effluent based on 322 samples collected between January 2010 and December 2013. The effluent limitations for settleable solids have not been retained. Removal of these effluent limitations is in accordance with federal anti-backsliding regulations (see section IV.E.3 of this Fact Sheet).

xii. **Silver**

(a) **WQO.** The CTR includes a hardness-dependent criterion for the protection of freshwater aquatic life for silver. This criterion for silver is presented in dissolved concentration, as a short-term acute criterion. U.S. EPA recommends conversion factors to translate dissolved concentrations to total concentrations. Default U.S. EPA translators were used for the receiving water and effluent.

(b) **RPA Results.** Section IV.C.2 of this Fact Sheet includes procedures for conducting the RPA for hardness-dependent CTR metals, such as silver. The table below shows the specific criteria used for the RPA.

| | CTR Acute Criterion (Total Recoverable) | Maximum Concentration (Total Recoverable) | Reasonable Potential? (Y/N) |
|---|---|---|---|
| Upstream Receiving Water | 0.046 µg/L[1] | ND (<1.1 µg/L) | No[3] |
| ~~Effluent~~Design Ambient Hardness | 0.88 µg/L[2] | ND (<1.1 µg/L) | No[3] |

[1] Based on lowest observed upstream receiving water hardness of 7.4 mg/L (as $CaCO_3$)
[2] Based on ~~lowest observed effluent~~the design ambient hardness of ~~85~~ 41 mg/L (as $CaCO_3$)~~ and lowest observed upstream receiving water hardness of 7.4 mg/L (as $CaCO_3$)~~
[3] See discussion below
ND = Non-detect

Section 1.2 of the SIP states, "*the RWQCB shall have discretion to consider if any data are inappropriate… for use in implementing this Policy.*" The highest reported concentration in the effluent was 1.1 µg/L but was reported as an estimated concentration. Estimated concentrations do not provide an adequate level of scientific certainty to use as evidence that the effluent exceeds the criterion. Therefore, the Central Valley Water Board finds that the sample results for the effluent and receiving water are inappropriate and did not use the data in conducting the RPA. Based on the remaining data, the discharge does not have reasonable potential to cause or contribute to an exceedance of water quality criteria. However, this Order still requires the Discharger to monitor for silver with the annual priority pollutant monitoring event, and requires the Discharger to meet the lowest applicable minimum level in the State Implementation Policy.

xiii. **Thallium**

(a) **WQO.** The CTR includes a criterion of 1.7 µg/L for thallium for the protection of human health for waters from which both water and organisms are consumed.

(b) **RPA Results.** The MEC for thallium was non-detect, and was also not detected in the upstream receiving water. Section 1.2 of the SIP states, "*the RWQCB shall have discretion to consider if any data are inappropriate… for use in implementing this Policy*." The highest reported concentration in the effluent was 5.8 µg/L but was reported as an estimated concentration. Estimated concentrations do not provide an adequate level of scientific certainty to use as evidence that the effluent thallium concentrations are above the criterion. Therefore, the Central Valley Water Board finds that the sample results are inappropriate and did not use the data in conducting in the RPA. Based on the remaining data, the discharge does not have reasonable potential to cause or contribute to an exceedance of water quality criteria. However, this Order still requires the Discharger to monitor for thallium with the annual priority pollutant monitoring event, and requires the Discharger to meet the lowest applicable minimum level in the State Implementation Policy.

xiv. **Total Dissolved Solids**

(a) **WQO.** The Secondary MCL – Consumer Acceptance Limit for total dissolved solids is 500 mg/L, which is used to implement the Basin Plan's chemical constituent objective for the protection of municipal and domestic supply.

(b) **RPA Results.** The MEC for total dissolved solids was 570 mg/L and the highest effluent calendar year average was 524 mg/L (based on seven samples), while the maximum observed upstream receiving water concentration was 54 mg/L and the highest receiving water calendar year average was 47 mg/L. This Order includes an effluent limitation for electrical conductivity, based on the Basin Plan effluent limitation. This Order also includes a requirement for the Discharger to evaluate the sources of salinity to the Facility. This Order does not include an effluent limitation for total dissolved solids because it includes an effluent limitation for electrical conductivity and a requirement to submit a salinity study.

b. **Constituents with Reasonable Potential.** The Central Valley Water Board finds that the discharge has a reasonable potential to cause or contribute to an in-stream excursion above a water quality standard for aluminum, un-ionized ammonia (as N), copper, cyanide, nitrate and nitrite, BOD, TSS, total coliform, pH, acute toxicity, and chronic toxicity. WQBELs for these constituents are included in this Order. A summary of the RPA is provided in Attachment G, and a detailed discussion of the RPA for each constituent is provided below.

i. **Aluminum**

Aluminum is the third most abundant element in the earth's crust and is ubiquitous in both soils and aquatic sediments. When mobilized in surface waters, aluminum has been shown to be toxic to various fish species. However, the potential for aluminum toxicity in surface waters is directly related to the chemical form of aluminum present, and the chemical form is highly dependent on water quality characteristics that ultimately determine the mechanism of aluminum toxicity. Surface water characteristics, including pH, temperature, colloidal material, fluoride and sulfate concentrations, and total organic carbon, all influence aluminum speciation and its subsequent bioavailability to aquatic life. Calcium [hardness] concentrations in surface water may also reduce aluminum toxicity by competing with monomeric aluminum ($Al^{3+}$) binding to negatively charged fish gills.

(a) **WQO.** The California Department of Public Health (CDPH) has established Secondary Maximum Contaminant Levels (MCLs) to assist public drinking water systems in managing their drinking water for aesthetic conditions such as taste, color, and odor. The Secondary MCL for aluminum is 200 µg/L for protection of the MUN beneficial use. Title 22 requires compliance with Secondary MCLs on an annual average basis.

The Code of Federal Regulations promulgated criteria for priority toxic pollutants for California's surface waters in 40 CFR 131.38 *Establishment of Numeric Criteria for Priority Toxic Pollutants for the State of California* (California Toxics Rule or CTR), including metals criteria. However, aluminum criteria were not promulgated as part of the CTR. Absent numeric aquatic life criteria for aluminum, WQBELs in the Central Valley Region's NPDES permits are based on the Basin Plan's narrative toxicity objective. The Basin Plan's *Application of Water Quality Objectives* requires the Central Valley Water Board to consider, "*on a case-by-case basis, direct evidence of beneficial use impacts, all material and relevant information submitted by the discharger and other interested parties, and relevant numerical criteria and guidelines developed and/or published by other agencies and organizations. In considering such criteria, the Board evaluates whether the specific numerical criteria which are available through these sources and through other information supplied to the Board, are relevant and appropriate to the situation at hand and, therefore, should be used*

*in determining compliance with the narrative objective*." Relevant information includes, but is not limited to (1) U.S. EPA *Ambient Water Quality Criteria for Aluminum* (NAWQC) and subsequent Correction, (2) site-specific conditions of Central Canal, the receiving water, and (3) site-specific aluminum studies conducted by dischargers within the Central Valley Region. (Basin Plan, page IV-17.00; see also 40 CFR 122.44(d)(vi).)

**U.S. EPA NAWQC**. U.S. EPA recommended the NAWQC aluminum acute criterion at 750 µg/L based on test waters with a pH of 6.5 to 9.0. U.S. EPA also recommended the NAWQC aluminum chronic criterion at 87 µg/L based upon the following two toxicity tests. All test waters contained hardness at 12 mg/L as $CaCO_3$.

(1) Acute toxicity tests at various aluminum doses were conducted in various acidic waters (pH 6.0-6.5) on 159- and 160-day old striped bass. The 159-day old striped bass showed no mortality in waters with pH at 6.5 and aluminum doses at 390 µg/L, and the 160-day old striped bass showed 58% mortality at a dose of 174.4 µg/L in same pH waters. However, the 160-day old striped bass showed 98% mortality at aluminum dose of 87.2 µg/L in waters with pH at 6.0, which is U.S. EPA's basis for the 87 µg/L chronic criterion. The varied results draw into question this study and the applicability of the NAWQC chronic criterion of 87 µg/L.

(2) Chronic toxicity effects on 60-day old brook trout were evaluated in circumneutral pH waters (pH 6.5-6.9) in five cells at various aluminum doses (4, 57, 88, 169, and 350 µg/L). Chronic evaluation started upon hatching of eyed eggs of brook trout, and their weight and length were measured after 45 days and 60 days. The 60-day old brook trout showed 24% weight loss at 169 µg/L of aluminum and 4% weight loss at 88 µg/L of aluminum, which is the basis for U.S. EPA's chronic criteria. Though this test study shows chronic toxic effects of 4% reduction in weight after exposure for 60 days, the chronic criterion is based on 4-day exposure; so again, the applicability of the NAWQC chronic criterion of 87 µg/L is questionable.

**Site-specific Conditions.** U.S. EPA advises that a water-effects ratio may be more appropriate to better reflect the actual toxicity of aluminum to aquatic organisms when the pH and hardness conditions of the receiving water are not similar to that of the test conditions.[9] Effluent and receiving water monitoring data indicate that the pH and hardness values are not similar to the low pH and hardness conditions under which the chronic criterion for aluminum was developed, as shown in the table below, and therefore, the Central Valley Water Board does not expect aluminum to be as toxic in Central Canal as in the previously described toxicity tests. The pH of Central Canal, the receiving water, ranged from 6.8 to 10 with a median of 7.6 based on 506 monitoring results obtained between April 2008 and December 2013. These water conditions typically are circumneutral pH where aluminum is predominately in the form of $Al(OH)_3$ and non-toxic to aquatic life. The hardness of Central Canal ranged from 7.4 mg/L to 130 mg/L, based on 13 samples from April 2008 to December 2013,

[9] "*The value of 87 µg/L is based on a toxicity test with the striped bass in water with pH = 6.5-6.6 and hardness <10 mg/L. Data in [a 1994 Study] indicate that aluminum is substantially less toxic at higher pH and hardness, but the effects of pH and hardness are not well quantified at this time.*" U.S. EPA 1999 NAWQC Correction, Footnote L.

which is above the conditions, and thus less toxic than the tests used to develop the chronic criterion. Additionally, striped bass and brook trout have not been documented in Central Canal, nor are any self-sustaining populations of these fish species expected to exist.

| Parameter | Units | Test Conditions for Applicability of Chronic Criterion | Effluent | Receiving Water |
|---|---|---|---|---|
| pH | standard units | 6.0-6.5 | 6.5-8.5 | 6.8-10 |
| Hardness, Total (as $CaCO_3$) | mg/L | 12 | 85-180 | 7.4-130 |
| Aluminum, Total Recoverable | µg/L | 87.2-390 | 33-330 | 45-4600 |

**Local Environmental Conditions and Studies.** Twenty-one site-specific aluminum toxicity tests have been conducted within the Central Valley Region. The pH and hardness of Central Canal are similar, as shown in the table below, and thus the results of these site-specific aluminum toxicity tests are relevant and appropriate for Central Canal. As shown in the following table, all $EC_{50}$[10] toxicity study result values are at concentrations of aluminum above 5,000 µg/L. Thus, the toxic effects of aluminum in these surface waters and in Central Canal, are less toxic (or less reactive) to aquatic species than demonstrated in the toxicity tests that U.S. EPA used for the basis of establishing the chronic criterion of 87 µg/L. This new information and a review of the toxicity tests U.S. EPA used to establish the chronic criterion, indicate that 87 µg/L is overly stringent and not applicable to Central Canal.

**Central Valley Region Site-Specific Aluminum Toxicity Data**

| Discharger | Test Waters | Hardness Value | Total Aluminum $EC_{50}$ Value | pH | WER |
|---|---|---|---|---|---|
| ***Oncorhynchus mykiss* (rainbow trout)** | | | | | |
| Manteca | Surface Water/Effluent | 124 | >8600 | 9.14 | N/C |
| Auburn | Surface Water | 16 | >16500 | 7.44 | N/C |
| Modesto | Surface Water/Effluent | 120/156 | >34250 | 8.96 | >229 |
| Yuba City | Surface Water/Effluent | 114/164[1] | >8000 | 7.60/7.46 | >53.5 |
| ***Ceriodaphnia dubia* (water flea)** | | | | | |
| Auburn | Effluent | 99 | >5270 | 7.44 | >19.3 |
| ” | Surface Water | 16 | >5160 | 7.44 | >12.4 |
| Manteca | Surface Water/Effluent | 124 | >8800 | 9.14 | N/C |
| ” | Effluent | 117 | >8700 | 7.21 | >27.8 |
| ” | Surface Water | 57 | 7823 | 7.58 | 25.0 |

[10] The effect concentration is a point estimate of the toxicant concentration that would cause an observable adverse effect (e.g., death, immobilization, or serious incapacitation) in a given percent of the test organisms, calculated from a continuous model (e.g., Probit Model). $EC_{50}$ is a point estimate of the toxicant concentration that would cause an observable adverse effect in 50 percent of the test organisms. The $EC_{50}$ is used in toxicity testing to determine the appropriate chronic criterion.

| Discharger | Test Waters | Hardness Value | Total Aluminum $EC_{50}$ Value | pH | WER |
|---|---|---|---|---|---|
| ” | Effluent | 139 | >9500 | 7.97 | >21.2 |
| ” | Surface Water | 104 | >11000 | 8.28 | >24.5 |
| ” | Effluent | 128 | >9700 | 7.78 | >25.0 |
| ” | Surface Water | 85 | >9450 | 7.85 | >25.7 |
| ” | Effluent | 106 | >11900 | 7.66 | >15.3 |
| ” | Surface Water | 146 | >10650 | 7.81 | >13.7 |
| Modesto | Surface Water/Effluent | 120/156 | 31604 | 8.96 | 211 |
| Yuba City | Surface Water/Effluent | 114/164[1] | >8000 | 7.60/7.46 | >53.5 |
| Placer County (SMD 1) | Effluent | 150 | >5000 | 7.4-8.7 | >13.7 |
| ***Daphnia magna* (water flea)** | | | | | |
| Manteca | Surface Water/Effluent | 124 | >8350 | 9.14 | N/C |
| Modesto | Surface Water/Effluent | 120/156 | >11900 | 8.96 | >79.6 |
| Yuba City | Surface Water/Effluent | 114/164[1] | >8000 | 7.60/7.46 | >53.5 |

[1] Hardness values may be biased high because the EDTA titrimetic method is subject to interferences that measure as hardness (barium, cadmium, lead, manganese, strontium, and zinc will be measured as hardness) producing hardness numbers that are likely to be greater than the calculation of hardness based upon the ICP analysis of calcium and magnesium. Upstream receiving water hardness ranged from 30 to 50.9 mg/L as $CaCO_3$ between January 2008 and August 2011. Furthermore, the upstream receiving water hardness was 37 mg/L as $CaCO_3$ on 4 October 2005, 7 days prior to the Feasibility Assessment (first phase of a Water Effects Ratio study) sample collection date of 11 October 2005. It is likely that matrix interferences from other metals were responsible for the unexpected hardness values reported by Pacific EcoRisk.

[2] N/C = Not Calculated

The Discharger has not conducted a toxicity test for aluminum; however, the City of Manteca conducted toxicity tests in the San Joaquin River. As shown, the test water quality characteristics of the San Joaquin River near Manteca are similar for pH and hardness in Central Canal. Results of the site-specific study conducted on the San Joaquin River near Manteca are representative of Central Canal near the discharge. Therefore, the City of Manteca aluminum toxicity test study is relevant for use in determining the specific numerical criteria to be used in determining compliance with the Basin Plan’s narrative toxicity objective. The City of Manteca aluminum toxicity study resulted in a minimum site-specific aluminum objective of 7,823 µg/L. Thus, these results also support the conclusion that the 87 µg/L chronic criterion is overly stringent for Central Canal near the discharge.

**Applicable WQOs.** This Order implements the Secondary MCL of 200 µg/L as an annual average for the protection of the MUN beneficial use.

(b) **RPA Results.** The maximum effluent concentration (MEC) for aluminum was 330 µg/L while the maximum observed upstream receiving water concentration was 4,600 µg/L. The maximum calendar year average in the effluent was 200 µg/L and in the receiving water was 4,600 µg/L (based on one sample during that year in the receiving water). There were two other years during which the

annual average exceeded 200 µg/L in the receiving water. Therefore, aluminum in the discharge has a reasonable potential to cause or contribute to an in-stream excursion above the secondary MCL.

(c) **WQBELs.** Due to no assimilative capacity, dilution credits are not allowed for development of the WQBELs for aluminum. This Order contains a final average monthly effluent limitation (AMEL) and a final average weekly effluent limitation (AWEL) for aluminum (total recoverable) of 341 µg/L and 761 µg/L, respectively.

40 CFR 122.45(d)(2) requires that for continuous discharges from POTWs, effluent limitations must be expressed in terms of average monthly and average weekly limitations, unless impracticable. The applicable aluminum WQO for this discharge is based on the California secondary MCL and aluminum is not a CTR constituent. Thus, the objective is not a human health or aquatic life criterion, and the Central Valley Water Board has discretion in calculating the effluent limitations. The AMEL and AWEL were calculated by generally using procedures in the State Implementation Policy, Section 1.4, Step 5. Table 2 of the State Implementation Policy was used to calculate AMEL and MDEL multipliers, and the long-term average was set as 200 µg/L. The AWEL was calculated from the MDEL multiplier, as there is no AWEL multiplier in the State Implementation Policy.

(d) **Plant Performance and Attainability.** Analysis of the effluent data shows that the MEC of 330 µg/L is not greater than the applicable WQBELs. The Central Valley Water Board concludes, therefore, that immediate compliance with these effluent limitations is feasible.

ii. **Ammonia**

(a) **WQO.**

(1) **Total Ammonia as N.** In August 2013, U.S. EPA published new NAWQC for the protection of freshwater aquatic life for total ammonia.[11] The 2013 NAWQC for ammonia recommends acute (1-hour average; criteria maximum concentration or CMC) and chronic (30-day average; criteria continuous concentration or CCC) standards based on pH and temperature. U.S. EPA also recommends that no 4-day average concentration should exceed 2.5 times the 30-day CCC. The 2013 NAWQC for ammonia takes into account data for several sensitive freshwater mussel species and non-pulmonate snails that had not previously been tested.

U.S. EPA found that as pH and temperature increased, both the acute and chronic toxicity of ammonia increased for invertebrates. However, U.S. EPA found that only pH significantly influenced acute and chronic ammonia toxicity for fish. Therefore, the 2013 acute NAWQC for ammonia is primarily based on the ammonia effects on species in the genus *Oncorhynchus* (salmonids) at lower temperatures and invertebrates at higher temperatures. However, due to the significant sensitivity unionid mussels have to the chronic toxicity effects of ammonia, the 2013 chronic NAWQC for ammonia are determined primarily by the effects on mussels.

[11] *Aquatic Life Ambient Water Quality Criteria for Ammonia – Freshwater*, published August 2013 [EPA 822-R-13-001]

The NAWQC document states "*unionid mussel species are not prevalent in some waters, such as in the arid west…*" The 2013 ammonia NAWQC also states that, "*In the case of ammonia, where a state demonstrates that mussels are not present on a site-specific basis, the recalculation procedure may be used to remove the mussel species from the national criteria dataset to better represent the species present at the site.*" Therefore, the 2013 ammonia NAWQC document includes acute and chronic criteria for waters where mussels are not present. The 2013 ammonia NAWQC also provides criteria for waters where Oncorhynchus species are not present and where protection of early life stages of fish genera is unnecessary.

A report prepared by The Nature Conservancy, *Sensitive Freshwater Mussel Surveys in the Pacific Southwest Region: Assessment of Conservation Status (*published August 2010), demonstrates the results of a strategic mussel study and survey conducted during 2008-2009. The study does not contain any survey information for Central Canal in the vicinity of the Facility discharge. The Central Valley Water Board is currently in the process of determining the best way to evaluate receiving waters within the Central Valley for the presence of mussels. Therefore, since the Central Valley Water Board is not aware of any documentation recording the presence of mussels in Central Canal, the site-specific ammonia criteria for waters where mussels are not present were used. Central Canal does not have a beneficial use of cold freshwater habitat (COLD) and the presence of salmonids and early fish life stages in Central Canal is not documented, therefore, the recommended ammonia criteria for waters where salmonids and early life stages are absent were used.

The Central Valley Water Board may require additional information from the Discharger in the future to evaluate whether more restrictive ammonia criteria for other species (i.e., unionid mussels) are applicable for Central Canal. However, at this time, ammonia criteria have been calculated with the assumption that mussels are not present.

(2) **Un-ionized Ammonia (as N).** The Basin Plan includes an objective that states "*[w]aters shall not contain un-ionized ammonia in amounts which adversely affect beneficial uses. In no case shall the discharge of wastes cause concentrations of un-ionized ammonia ($NH_3$) to exceed 0.025 mg/L (as N) in receiving waters*."

(b) **RPA Results.**

(1) **Total Ammonia (as N) and Un-ionized Ammonia (as N).** The Facility is a POTW that treats domestic wastewater. Untreated domestic wastewater contains ammonia in concentrations that, without treatment, would be harmful to fish and would violate the Basin Plan narrative toxicity objective if discharged to the receiving water. Reasonable potential therefore exists and effluent limitations are required.

Federal regulations at 40 CFR 122.44(d)(1)(i) require that, "*Limitations must control all pollutants or pollutant parameters (either conventional, nonconventional, or toxic pollutants) which the Director determines are or may be discharged at a level which will cause, have the reasonable potential to cause, or contribute to an excursion above any State water quality standard, including State narrative criteria for water quality.*" For priority pollutants, the SIP dictates the procedures for conducting the RPA.

Ammonia is not a priority pollutant. Therefore, the Central Valley Water Board is not restricted to one particular RPA method. Due to the site-specific conditions of the discharge, the Central Valley Water Board has used professional judgment in determining the appropriate method for conducting the RPA for this non-priority pollutant constituent.

U.S. EPA's September 2010 NPDES Permit Writer's Manual, page 6-30, states, "*State implementation procedures might allow, or even require, a permit writer to determine reasonable potential through a qualitative assessment process without using available facility-specific effluent monitoring data or when such data are not available…A permitting authority might also determine that WQBELs are required for specific pollutants for all facilities that exhibit certain operational or discharge characteristics (e.g., WQBELs for pathogens in all permits for POTWs discharging to contact recreational waters).*" U.S. EPA's TSD also recommends that factors other than effluent data should be considered in the RPA, "*When determining whether or not a discharge causes, has the reasonable potential to cause, or contributes to an excursion of a numeric or narrative water quality criterion for individual toxicants or for toxicity, the regulatory authority can use a variety of factors and information where facility-specific effluent monitoring data are unavailable. These factors also should be considered with available effluent monitoring data.*" With regard to POTWs, U.S. EPA recommends that, "*POTWs should also be characterized for the possibility of chlorine and ammonia problems.*" (TSD, p. 50)

Nitrification is a biological process that converts ammonia to nitrite and nitrite to nitrate. Denitrification is a process that converts nitrate to nitrite or nitric oxide and then to nitrous oxide or nitrogen gas, which is then released to the atmosphere. The Discharger currently uses nitrification to remove ammonia from the waste stream. Inadequate or incomplete nitrification may result in the discharge of ammonia to the receiving stream. Ammonia is known to cause toxicity to aquatic organisms in surface waters. Discharges of ammonia in concentrations that produce detrimental physiological responses to human, plant, animal, or aquatic life would violate the Basin Plan narrative toxicity objective. Although the Discharger nitrifies the discharge, inadequate or incomplete nitrification creates the potential for ammonia to be discharged and provides the basis for the discharge to have a reasonable potential to cause or contribute to an in-stream excursion above the NAWQC. Therefore, the Central Valley Water Board finds the discharge has reasonable potential for ammonia and WQBELs are required.

(c) **WQBELs.**

(1) **Total Ammonia (as N).** The Central Valley Water Board calculates WQBELs in accordance with SIP procedures for total ammonia. The SIP procedure assumes a 4-day averaging period for calculating the long-term average discharge condition (LTA). However, U.S. EPA recommends modifying the procedure for calculating effluent limitations for ammonia using a 30-day averaging period for the calculation of the LTA corresponding to the 30-day CCC. Therefore, while the LTAs corresponding to the acute and 4-day chronic criteria were calculated according to SIP procedures, the LTA corresponding to the 30-day CCC was calculated assuming a 30-day averaging period. The lowest LTA representing the acute, 4-day CCC, and 30-day CCC is then selected for deriving the AMEL and the MDEL. The

remainder of the WQBEL calculation for ammonia was performed according to the SIP procedures. The WQBELs were calculated as 0.47 mg/L (AMEL) and 0.81 (MDEL) between May through October, and 0.16 mg/L (AMEL) and 0.38 mg/L (MDEL) between November through April, based on the 2013 NAWQC. However, this Order does not contain WQBELs for total ammonia (as N) because the proposed WQBEL for un-ionized ammonia (as N) is more protective of the beneficial uses.

(2) **Un-ionized Ammonia (as N).** This Order includes a final MDEL of 0.025 mg/L for un-ionized ammonia (as N) that is based on the Basin Plan objective.

(d) **Plant Performance and Attainability.** Analysis of the effluent data shows that the calculated MEC of 0.018 mg/L is less than the applicable WQBEL. The Central Valley Water Board concludes, therefore, that immediate compliance with this effluent limitation is feasible.

iii. **Copper, Total Recoverable**

(a) **WQO.** The CTR includes hardness-dependent criteria for the protection of freshwater aquatic life for copper. These criteria for copper are presented in dissolved concentrations as short-term acute and 4-day chronic criteria. U.S. EPA recommends conversion factors to translate dissolved concentrations to total concentrations. Default U.S. EPA translators were used for the receiving water and effluent.

(b) **RPA Results.** Section IV.C.2 of this Fact Sheet includes procedures for conducting the RPA for hardness-dependent CTR metals, such as copper. The table below shows the specific criteria used for the RPA.

| | CTR Acute Criterion (Total Recoverable) | Maximum Concentration (Total Recoverable) | Reasonable Potential? (Y/N) |
|---|---|---|---|
| Upstream Receiving Water | 1.0 µg/L[1] | 22 | Yes[3] |
| ~~Effluent~~Design Ambient Hardness | 8.1 µg/L[2] | 41 | Yes[3] |

[1] Based on lowest observed upstream receiving water hardness of 7.4 mg/L (as $CaCO_3$)
[2] Based on ~~lowest observed effluent~~ the design ambient hardness of 85 mg/L (as $CaCO_3$)
[3] See discussion below

Based on the available data, copper in the discharge has a reasonable potential to cause or contribute to an in-stream excursion above the CTR criteria for the protection of freshwater aquatic life.

(c) **WQBELs.** No dilution credits are allowed for the development of WQBELs for total recoverable copper due to periods of no flow in the receiving water. This Order contains a final AMEL and MDEL for copper of 6.5 µg/L and 12 µg/L, respectively, based on the CTR criterion for the protection of freshwater aquatic life.

(d) **Plant Performance and Attainability.** Analysis of the effluent data shows that the MEC of 41 µg/L is greater than applicable WQBELs. Based on the sample results for the effluent, the limitations appear to put the Discharger in immediate

non-compliance. New or modified control measures may be necessary in order to comply with the effluent limitations, and the new or modified control measures cannot be designed, installed and put into operation within 30 calendar days. Furthermore, the effluent limitations for copper are a new regulatory requirement within this Order, which becomes applicable to the waste discharge with the adoption of this Order, which was adopted after 1 July 2000. Therefore, a time schedule for compliance with the copper effluent limitations is established in Cease and Desist Order (CDO) R5-2014-**XXXX** in accordance with Water Code section 13301, and requires preparation and implementation of a pollution prevention plan in compliance with Water Code section 13263.3.

iv. **Cyanide**

(a) **WQO.** The CTR includes maximum short-term average and 4-day average criteria of 22 µg/L and 5.2 µg/L, respectively, for cyanide for the protection of freshwater aquatic life.

(b) **RPA Results.** The MEC for cyanide was 6.6 µg/L, while cyanide was not detected in the receiving water. Therefore, cyanide in the discharge has a reasonable potential to cause or contribute to an in-stream excursion above the CTR criteria for the protection of freshwater aquatic life.

(c) **WQBELs.** No dilution credits are allowed for the development of WQBELs for cyanide due to periods of no flow in the receiving water. This Order contains a final AMEL and MDEL for cyanide of 4.2 µg/L and 8.7 µg/L, respectively, based on the CTR criterion for the protection of freshwater aquatic life.

(d) **Plant Performance and Attainability.** Analysis of the effluent data shows that the MEC of 6.6 µg/L is greater than applicable WQBELs. Based on the sample results for the effluent, the limitations appear to put the Discharger in immediate non-compliance. New or modified control measures may be necessary in order to comply with the effluent limitations, and the new or modified control measures cannot be designed, installed and put into operation within 30 calendar days. Furthermore, the effluent limitations for cyanide are a new regulatory requirement within this Order, which becomes applicable to the waste discharge with the adoption of this Order, which was adopted after 1 July 2000. Therefore, a time schedule for compliance with the cyanide effluent limitations is established in CDO R5-2014-**XXXX** in accordance with Water Code section 13301, and requires preparation and implementation of a pollution prevention plan in compliance with Water Code section 13263.3.

v. **Nitrate and Nitrite**

(a) **WQO.** CDPH has adopted Primary MCLs for the protection of human health for nitrite and nitrate that are equal to 1 mg/L and 10 mg/L (measured as nitrogen), respectively. CDPH has also adopted a primary MCL of 10 mg/L for the sum of nitrate and nitrite, measured as nitrogen.

U.S. EPA has developed a primary MCL and an MCL goal of 1 mg/L for nitrite (as nitrogen). For nitrate, U.S. EPA has developed Drinking Water Standards (10 mg/L as Primary MCL) and NAWQC for protection of human health (10 mg/L for non-cancer health effects).

(b) **RPA Results.** The Facility is a POTW that treats domestic wastewater. Untreated domestic wastewater contains ammonia in concentrations that, if untreated, will be harmful to fish and will violate the Basin Plan's narrative toxicity

objective. This Order, therefore, requires removal of ammonia (i.e., nitrification). Nitrification is a biological process that converts ammonia to nitrate and nitrite, and will result in effluent nitrate concentrations above the primary MCL for nitrate plus nitrite. Nitrate concentrations in a drinking water supply above the primary MCL threaten the health of human fetuses and newborn babies by reducing the oxygen-carrying capacity of the blood (methemoglobinemia). Reasonable potential for nitrate and nitrite therefore exists and WQBELs are required.

Federal regulations at 40 CFR 122.44(d)(1)(i) requires that, "*Limitations must control all pollutants or pollutant parameters (either conventional, nonconventional, or toxic pollutants) which the Director determines are or may be discharged at a level which will cause, have the reasonable potential to cause, or contribute to an excursion above any State water quality standard, including State narrative criteria for water quality.*" For priority pollutants, the SIP dictates the procedures for conducting the RPA. Nitrate and nitrite are not priority pollutants. Therefore, the Central Valley Water Board is not restricted to one particular RPA method. Due to the site-specific conditions of the discharge, the Central Valley Water Board has used professional judgment in determining the appropriate method for conducting the RPA for these non-priority pollutant constituents.

U.S. EPA's September 2010 NPDES Permit Writer's Manual, page 6-30, states, "*State implementation procedures might allow, or even require, a permit writer to determine reasonable potential through a qualitative assessment process without using available facility-specific effluent monitoring data or when such data are not available…A permitting authority might also determine that WQBELs are required for specific pollutants for all facilities that exhibit certain operational or discharge characteristics (e.g., WQBELs for pathogens in all permits for POTWs discharging to contact recreational waters).*" U.S. EPA's TSD also recommends that factors other than effluent data should be considered in the RPA, "*When determining whether or not a discharge causes, has the reasonable potential to cause, or contributes to an excursion of a numeric or narrative water quality criterion for individual toxicants or for toxicity, the regulatory authority can use a variety of factors and information where facility-specific effluent monitoring data are unavailable. These factors also should be considered with available effluent monitoring data.*" With regard to POTWs, U.S. EPA recommends that, "*POTWs should also be characterized for the possibility of chlorine and ammonia problems.*" (TSD, p. 50)

The concentration of nitrogen in raw domestic wastewater is sufficiently high that the resultant treated wastewater has a reasonable potential to exceed or threaten to exceed the primary MCL for nitrate plus nitrite unless the wastewater is treated for nitrogen removal, and therefore an effluent limitation for nitrate plus nitrite is required. Denitrification is a process that converts nitrate to nitrite or nitric oxide and then to nitrous oxide or nitrogen gas, which is then released to the atmosphere. The Discharger currently uses nitrification to remove ammonia from the waste stream. Inadequate or incomplete denitrification may result in the discharge of nitrate and/or nitrite to the receiving stream. Discharges of nitrate plus nitrite in concentrations that exceed the primary MCL would violate the Basin Plan narrative chemical constituents objective. Inadequate or incomplete denitrification creates the potential for nitrate and nitrite to be discharged and provides the basis for the discharge to have a reasonable potential to cause or contribute to an in-stream excursion above the primary MCL. Therefore, the

Central Valley Water Board finds the discharge has reasonable potential for nitrate plus nitrite and WQBELs are required.

(c) **WQBELs.** This Order contains a final AMEL for nitrate plus nitrite of 10 mg/L (total as N), based on the California Primary MCL. This effluent limitation is included in this Order to assure the treatment process adequately nitrifies and denitrifies the waste stream to protect the beneficial use of municipal and domestic supply.

(d) **Plant Performance and Attainability.** Analysis of the effluent data shows that the MECs of 20 mg/L for nitrate (as N) and 2.6 for nitrite (as N) combined are greater than the applicable WQBEL. Based on the sample results for the effluent, the limitation appears to put the Discharger in immediate non-compliance. New or modified control measures may be necessary in order to comply with the effluent limitation, and the new or modified control measures cannot be designed, installed and put into operation within 30 calendar days. Furthermore, the effluent limitation for nitrate plus nitrite (as N) is a new regulatory requirement within this Order, which becomes applicable to the waste discharge with the adoption of this Order, which was adopted after 1 July 2000. Therefore, a time schedule for compliance with the nitrate plus nitrite (as N) effluent limitation is established in CDO R5-2014-**XXXX** in accordance with Water Code section 13301, and requires preparation and implementation of a pollution prevention plan in compliance with Water Code section 13263.3.

vi. **Pathogens**

(a) **WQO.** CDPH has developed reclamation criteria at Title 22, CCR, Division 4, Chapter 3 (Title 22), for the reuse of wastewater. Title 22 requires that for spray irrigation of food crops, parks, playgrounds, schoolyards, and other areas of similar public access, wastewater be adequately disinfected, oxidized, coagulated, clarified, and filtered, and that the effluent total coliform levels not exceed 2.2 MPN/100 mL as a 7-sample median; 23 MPN/100 mL, not to be exceeded more than once in a 30-day period; and 240 MPN/100 mL, at any time.

Title 22 also requires that recycled water used as a source of water supply for non-restricted recreational impoundments be disinfected, tertiary recycled water that has been subjected to conventional treatment. A non-restricted recreational impoundment is defined as "*an impoundment of recycled water, in which no limitations are imposed on body-contact water recreational activities.*" Title 22 is not directly applicable to surface waters; however, the Central Valley Water Board finds that it is appropriate to apply an equivalent level of treatment to that required by the CDPH's reclamation criteria because the receiving water is used for irrigation of agricultural land and has a beneficial use for contact recreation. The stringent disinfection criteria of Title 22 are appropriate since the undiluted effluent may be used for the irrigation of food crops and/or for body-contact water recreation. Coliform organisms are intended as an indicator of the effectiveness of the entire treatment train and the effectiveness of removing other pathogens.

(b) **RPA Results.** Raw domestic wastewater inherently contains human pathogens that threaten human health and life, and constitute a threatened pollution and nuisance under Water Code section 13050 if discharged untreated to the receiving water. Reasonable potential for pathogens, therefore, exists and WQBELs are required.

Federal regulations at 40 CFR 122.44(d)(1)(i) requires that, "*Limitations must control all pollutants or pollutant parameters (either conventional, nonconventional, or toxic pollutants) which the Director determines are or may be discharged at a level which will cause, have the reasonable potential to cause, or contribute to an excursion above any State water quality standard, including State narrative criteria for water quality.*" For priority pollutants, the SIP dictates the procedures for conducting the RPA. Pathogens are not priority pollutants. Therefore, the Central Valley Water Board is not restricted to one particular RPA method. Due to the site-specific conditions of the discharge, the Central Valley Water Board has used professional judgment in determining the appropriate method for conducting the RPA for this non-priority pollutant constituent.

U.S. EPA's September 2010 NPDES Permit Writer's Manual, page 6-30, states, "*State implementation procedures might allow, or even require, a permit writer to determine reasonable potential through a qualitative assessment process without using available facility-specific effluent monitoring data or when such data are not available…A permitting authority might also determine that WQBELs are required for specific pollutants for all facilities that exhibit certain operational or discharge characteristics (e.g., WQBELs for pathogens in all permits for POTWs discharging to contact recreational waters).*" U.S. EPA's TSD also recommends that factors other than effluent data should be considered in the RPA, "*When determining whether or not a discharge causes, has the reasonable potential to cause, or contributes to an excursion of a numeric or narrative water quality criterion for individual toxicants or for toxicity, the regulatory authority can use a variety of factors and information where facility-specific effluent monitoring data are unavailable. These factors also should be considered with available effluent monitoring data.*" (TSD, p. 50)

The beneficial uses of Central Canal include municipal and domestic supply, water contact recreation, and agricultural irrigation supply, and there is, at times, less than 20:1 dilution. To protect these beneficial uses, the Central Valley Water Board finds that the wastewater must be disinfected and adequately treated to prevent disease. Although the Discharger provides disinfection, inadequate or incomplete disinfection creates the potential for pathogens to be discharged. Therefore, the Central Valley Water Board finds the discharge has reasonable potential for pathogens and WQBELs are required.

(c) **WQBELs.** In accordance with the requirements of Title 22, this Order includes effluent limitations for total coliform of 2.2 MPN/100 mL as a 7-sample median; 23 MPN/100 mL, not to be exceeded more than once in a 30-day period; and 240 MPN/100 mL as an instantaneous maximum.

The tertiary treatment process, or equivalent, is capable of reliably treating wastewater to a turbidity of 2 nephelometric turbidity units (NTU). Failure of the filtration system such that virus removal is impaired would normally result in increased particles in the effluent, which result in higher effluent turbidity. Turbidity has a major advantage for monitoring filter performance. Coliform testing, by comparison, is not conducted continuously and requires several hours, to days, to identify high coliform concentrations. Therefore, to ensure compliance with the required level of disinfection (based on Title 22 disinfection criteria), weekly average specifications are impracticable for turbidity. This Order includes operational specifications for turbidity that vary depending on whether the Discharger is using coagulation.

Final WQBELs for $BOD_5$ and TSS are based on the technical capability of the tertiary process, which is necessary to protect the beneficial uses of the receiving water. $BOD_5$ is a measure of the amount of oxygen used in the biochemical oxidation of organic matter. The tertiary treatment standards for $BOD_5$ and TSS are indicators of the effectiveness of the tertiary treatment process. The principal design parameter for wastewater treatment plants is the daily $BOD_5$ and TSS loading rates and the corresponding removal rate of the system. The application of tertiary treatment processes results in the ability to achieve lower levels for $BOD_5$ and TSS than the secondary standards currently prescribed. Therefore, this Order requires AMELs for $BOD_5$ and TSS of 10 mg/L, which is technically based on the capability of a tertiary system. In addition to the average weekly and average monthly effluent limitations, daily maximum effluent limitations for $BOD_5$ and TSS are included in the Order to ensure that the treatment works are not organically overloaded and operate in accordance with design capabilities. This Order also includes an average monthly effluent limitation requiring at least 90% removal of $BOD_5$ and TSS compared to influent concentrations.

This Order contains effluent limitations for $BOD_5$, total coliform, and TSS and requires a tertiary level of treatment, or equivalent, necessary to protect the beneficial uses of the receiving water. The Central Valley Water Board has previously considered the factors in Water Code section 13241 in establishing these requirements, and previously established these limitations in Order R5-2008-0033.

(d) **Plant Performance and Attainability.** The Facility is designed to provide tertiary treatment and disinfection to achieve compliance with the effluent limitations for $BOD_5$, total coliform, TSS, and $BOD_5$ and TSS percent removal. The Central Valley Water Board concludes, therefore, that immediate compliance with these effluent limitations is feasible.

vii. **pH**

(a) **WQO.** The Basin Plan includes a water quality objective for surface waters that the "*pH of water shall not be depressed below 6.5, raised above 8.3, or changed at any time more than 0.3 units from normal ambient pH.*"

(b) **RPA Results.** Raw domestic wastewater inherently has variable pH. Additionally, some wastewater treatment processes can increase or decrease wastewater pH which if not properly controlled, would violate the Basin Plan's numeric objective for pH in the receiving water. Therefore, reasonable potential exists for pH and WQBELs are required.

Federal regulations at 40 CFR 122.44(d)(1)(i) requires that, "*Limitations must control all pollutants or pollutant parameters (either conventional, nonconventional, or toxic pollutants) which the Director determines are or may be discharged at a level which will cause, have the reasonable potential to cause, or contribute to an excursion above any State water quality standard, including State narrative criteria for water quality.*" For priority pollutants, the SIP dictates the procedures for conducting the RPA. pH is not a priority pollutant. Therefore, the Central Valley Water Board is not restricted to one particular RPA method. Due to the site-specific conditions of the discharge, the Central Valley Water Board has used professional judgment in determining the appropriate method for conducting the RPA for this non-priority pollutant constituent.

U.S. EPA's September 2010 NPDES Permit Writer's Manual, page 6-30, states, "*State implementation procedures might allow, or even require, a permit writer to determine reasonable potential through a qualitative assessment process without using available facility-specific effluent monitoring data or when such data are not available…A permitting authority might also determine that WQBELs are required for specific pollutants for all facilities that exhibit certain operational or discharge characteristics (e.g., WQBELs for pathogens in all permits for POTWs discharging to contact recreational waters).*" U.S. EPA's TSD also recommends that factors other than effluent data should be considered in the RPA, "*When determining whether or not a discharge causes, has the reasonable potential to cause, or contributes to an excursion of a numeric or narrative water quality criterion for individual toxicants or for toxicity, the regulatory authority can use a variety of factors and information where facility-specific effluent monitoring data are unavailable. These factors also should be considered with available effluent monitoring data.*" (TSD, p. 50)

The Facility is a POTW that treats domestic wastewater. Based on 332 samples taken from January 2010 through December 2013, the maximum pH reported was 8.5 and the minimum was 6.5. The Facility exceeded the instantaneous maximum effluent limitation one time on 2 July 2013. Since 3 July 2013, the maximum pH reported was 7.9. Although the Discharger has proper pH controls in place, the pH for the Facility's influent varies due to the nature of municipal sewage, which provides the basis for the discharge to have a reasonable potential to cause or contribute to an in-stream excursion above the Basin Plan's numeric objective for pH in the receiving water. Therefore, WQBELs for pH are required in this Order.

(c) **WQBELs.** Effluent limitations for pH of 6.5 as an instantaneous minimum and 8.3 as an instantaneous maximum are included in this Order based on protection of the Basin Plan objectives for pH.

(d) **Plant Performance and Attainability.** Based 332 samples taken between January 2010 and December 2013, the effluent pH exceeded the instantaneous maximum effluent limitation once and was never reported below the instantaneous minimum effluent limitations. The Central Valley Water Board concludes, therefore, that immediate compliance with these effluent limitations is feasible.

**4. WQBELs Calculations**

a. This Order includes WQBELs for aluminum, un-ionized ammonia (as N), copper, cyanide, nitrate and nitrite, BOD, TSS, total coliform, pH, acute toxicity, and chronic toxicity. The general methodology for calculating WQBELs based on the different criteria/objectives is described in subsections IV.C.4.b through e, below. See Attachment H for the WQBELs calculations. Calculations for the aluminum effluent limitations are discussed in section IV.C.3.b.i.(c) of this Fact Sheet.

b. **Effluent Concentration Allowance.** For each water quality criterion/objective, the ECA is calculated using the following steady-state mass balance equation from Section 1.4 of the SIP:

$ECA = C + D(C - B)$ where $C>B$, and
$ECA = C$ where $C \leq B$

where:

ECA = effluent concentration allowance
D = dilution credit
C = the priority pollutant criterion/objective
B = the ambient background concentration.

According to the SIP, the ambient background concentration (B) in the equation above shall be the observed maximum with the exception that an ECA calculated from a priority pollutant criterion/objective that is intended to protect human health from carcinogenic effects shall use the arithmetic mean concentration of the ambient background samples. For ECAs based on MCLs, which implement the Basin Plan's chemical constituents objective and are applied as annual averages, an arithmetic mean is also used for B due to the long-term basis of the criteria.

c. **Basin Plan Objectives and MCLs.** For WQBELs based on site-specific numeric Basin Plan objectives or MCLs, the effluent limitations are applied directly as the ECA as either an MDEL, AMEL, or average annual effluent limitations, depending on the averaging period of the objective.

d. **Aquatic Toxicity Criteria.** WQBELs based on acute and chronic aquatic toxicity criteria are calculated in accordance with Section 1.4 of the SIP. The ECAs are converted to equivalent long-term averages (i.e., $LTA_{acute}$ and $LTA_{chronic}$) using statistical multipliers and the lowest LTA is used to calculate the AMEL and MDEL using additional statistical multipliers.

e. **Human Health Criteria.** WQBELs based on human health criteria, are also calculated in accordance with Section 1.4 of the SIP. The ECAs are set equal to the AMEL and a statistical multiplier was used to calculate the MDEL.

$$AMEL = mult_{AMEL}\left[\min\left(\overbrace{M_A ECA_{acute}}^{LTA_{acute}}, M_C ECA_{chronic}\right)\right]$$

$$MDEL = mult_{MDEL}\left[\min\left(M_A ECA_{acute}, \underbrace{M_C ECA_{chronic}}_{LTA_{chronic}}\right)\right]$$

$$MDEL_{HH} = \left(\frac{mult_{MDEL}}{mult_{AMEL}}\right) AMEL_{HH}$$

where:
$mult_{AMEL}$ = statistical multiplier converting minimum LTA to AMEL
$mult_{MDEL}$ = statistical multiplier converting minimum LTA to MDEL
$M_A$ = statistical multiplier converting acute ECA to $LTA_{acute}$
$M_C$ = statistical multiplier converting chronic ECA to $LTA_{chronic}$

**Summary of Water Quality-Based Effluent Limitations**
**Discharge Point 001**

**Table F-16. Summary of Water Quality-Based Effluent Limitations**

| Parameter | Units | Effluent Limitations | | | | |
|---|---|---|---|---|---|---|
| | | Average Monthly | Average Weekly | Maximum Daily | Instantaneous Minimum | Instantaneous Maximum |
| Biochemical Oxygen Demand 5-day @ 20°C ($BOD_5$) | mg/L | 10 | 15 | 30 | -- | -- |
| | lbs/day | 38 | 56 | 113 | -- | -- |

| Parameter | Units | Effluent Limitations | | | | |
|---|---|---|---|---|---|---|
| | | Average Monthly | Average Weekly | Maximum Daily | Instantaneous Minimum | Instantaneous Maximum |
| | % removal | (see below) | | | | |
| Total Suspended Solids (TSS) | mg/L | 10 | 15 | 30 | -- | -- |
| | lbs/day | 38 | 56 | 113 | -- | -- |
| | % removal | (see below) | | | | |
| pH | standard units | -- | -- | -- | 6.5 | 8.3 |
| Copper, Total Recoverable | µg/L | 6.5 | -- | 12 | -- | -- |
| Cyanide, Total (as CN) | µg/L | 4.2 | -- | 8.7 | -- | -- |
| Aluminum, Total Recoverable | µg/L | 341 | 761 | -- | -- | -- |
| Ammonia, Un-ionized (as N) | mg/L | -- | -- | 0.025 | -- | -- |
| Nitrate plus Nitrite (as N) | mg/L | 10. | -- | -- | -- | -- |
| Acute Toxicity | % survival | (see below) | | | | |
| Chronic Toxicity | TUc | (see below) | | | | |
| Total Coliform | MPN/100 mL | (see below) | | | | |

a. **Percent Removal.** The average monthly percent removal of $BOD_5$ and TSS shall not be less than 90 percent.

b. **Acute Whole Effluent Toxicity.** Survival of aquatic organisms in 96-hour bioassays of undiluted waste shall be no less than:

   i. 70%, minimum for any one bioassay;

   ii. 90%, median for any three consecutive bioassays.

c. **Chronic Whole Effluent Toxicity.** There shall be no chronic toxicity in the effluent discharge.

d. **Total Coliform.** Effluent total coliform shall not exceed:

   i. 2.2 most probable number (MPN) per 100 mL, as a 7-sample median;

   ii. 23 MPN/100 mL, more than once in any 30-day period; and

   iii. 240 MPN/100 mL, at any time.

**5. Whole Effluent Toxicity (WET)**

For compliance with the Basin Plan's narrative toxicity objective, this Order requires the Discharger to conduct whole effluent toxicity testing for acute and chronic toxicity, as specified in the Monitoring and Reporting Program (Attachment E, section V.). This Order also contains effluent limitations for acute toxicity and requires the Discharger to implement best management practices to investigate the causes of, and identify corrective actions to reduce or eliminate effluent toxicity.

a. **Acute Aquatic Toxicity.** The Basin Plan contains a narrative toxicity objective that states, "*All waters shall be maintained free of toxic substances in concentrations that produce detrimental physiological responses in human, plant, animal, or aquatic life.*" (Basin Plan at page III-6) The Basin Plan also states that, "*effluent limits based upon acute biotoxicity tests of effluents will be prescribed where appropriate.*"

   For priority pollutants, the SIP dictates the procedures for conducting the RPA. Acute toxicity is not a priority pollutant. Therefore, the Central Valley Water Board is not restricted to one particular RPA method. Due to the site-specific conditions of the discharge, the Central Valley Water Board has used professional judgment in

determining the appropriate method for conducting the RPA. U.S. EPA's September 2010 NPDES Permit Writer's Manual, page 6-30, states, "*State implementation procedures might allow, or even require, a permit writer to determine reasonable potential through a qualitative assessment process without using available facility-specific effluent monitoring data or when such data are not available… A permitting authority might also determine that WQBELs are required for specific pollutants for all facilities that exhibit certain operational or discharge characteristics (e.g., WQBELs for pathogens in all permits for POTWs discharging to contact recreational waters).*" Although the discharge has been consistently in compliance with the acute effluent limitations, the Facility is a POTW that treats domestic wastewater containing ammonia and other acutely toxic pollutants. Acute toxicity effluent limitations are required to ensure compliance with the Basin Plan's narrative toxicity objective.

U.S. EPA Region 9 provided guidance for the development of acute toxicity effluent limitations in the absence of numeric water quality objectives for toxicity in its document titled "Guidance for NPDES Permit Issuance", dated February 1994. In section B.2. "Toxicity Requirements" (pgs. 14-15) it states that, "*In the absence of specific numeric water quality objectives for acute and chronic toxicity, the narrative criterion 'no toxics in toxic amounts' applies. Achievement of the narrative criterion, as applied herein, means that ambient waters shall not demonstrate for acute toxicity: 1) less than 90% survival, 50% of the time, based on the monthly median, or 2) less than 70% survival, 10% of the time, based on any monthly median. For chronic toxicity, ambient waters shall not demonstrate a test result of greater than 1 TUc.*" Accordingly, effluent limitations for acute toxicity have been included in this Order as follows:

**Acute Toxicity.** Survival of aquatic organisms in 96-hour bioassays of undiluted waste shall be no less than:

Minimum for any one bioassay ---------- 70%

Median for any three consecutive bioassays ---------- 90%

b. **Chronic Aquatic Toxicity.** The Basin Plan contains a narrative toxicity objective that states, "*All waters shall be maintained free of toxic substances in concentrations that produce detrimental physiological responses in human, plant, animal, or aquatic life.*" (Basin Plan at page III-6) Based on chronic WET testing performed by the Discharger from January 2010 through December 2013, the discharge has reasonable potential to cause or contribute to an in-stream excursion above of the Basin Plan's narrative toxicity objective. As shown in Table F-17 below.

**Table F-17. Whole Effluent Chronic Toxicity Testing Results**

| | **Fathead Minnow** *Pimephales promelas* | | **Water Flea** *Ceriodaphnia dubia* | | **Green Algae** *Selenastrum capricornutum* |
|---|---|---|---|---|---|
| Date | Survival (TUc) | Growth (TUc) | Survival (TUc) | Reproduction (TUc) | Growth (TUc) |
| 3/15/2010 | 1.0 | 1.0 | 1.0 | 1.0 | 1.0 |
| 9/20/2010 | 2.0 | 1.0 | 1.0 | 1.0 | 1.0 |
| 10/19/2010 | -- | -- | -- | -- | 1.0 |
| 11/2/2010 | -- | -- | -- | -- | 1.0 |
| 11/16/2010 | -- | -- | -- | -- | 1.0 |
| 11/30/2010 | -- | -- | -- | -- | 1.0 |
| 3/21/2011 | 1.0 | 1.0 | 1.0 | 1.0 | 1.3 |
| 2/7/2012 | -- | -- | -- | -- | 1.0 |
| 3/13/2012 | -- | -- | -- | -- | 1.3 |

| Date | **Fathead Minnow** *Pimephales promelas* | | **Water Flea** *Ceriodaphnia dubia* | | **Green Algae** *Selenastrum capricornutum* |
|---|---|---|---|---|---|
| | Survival (TUc) | Growth (TUc) | Survival (TUc) | Reproduction (TUc) | Growth (TUc) |
| 3/11/2013 | 1.0 | 1.0 | 1.0 | 1.0 | 1.0 |
| 6/3/2013 | 1.0 | 1.0 | 1.0 | 1.0 | 1.0 |
| 9/9/2013 | 1.0 | 1.0 | 1.0 | 1.0 | 1.0 |

No dilution has been granted for the chronic condition. Therefore, chronic toxicity testing results exceeding 1 chronic toxicity unit (TUc) demonstrates the discharge has a reasonable potential to cause or contribute to an exceedance of the Basin Plan's narrative toxicity objective.

The Monitoring and Reporting Program of this Order requires quarterly chronic WET monitoring for demonstration of compliance with the narrative toxicity objective and effluent limitation. In addition to WET monitoring, Special Provision VI.C.2.a of this Order requires the Discharger to submit to the Central Valley Water Board a TRE Work Plan. The provision also includes a numeric toxicity monitoring trigger, requirements for accelerated monitoring, and requirements for TRE initiation if toxicity is demonstrated.

Numeric chronic WET effluent limitations have not been included in this Order. The SIP contains implementation gaps regarding the appropriate form and implementation of chronic toxicity limitations. This has resulted in the petitioning of a NPDES permit in the Los Angeles Region[12] that contained numeric chronic toxicity effluent limitations. To address the petition, the State Water Board adopted WQO 2003-0012 directing its staff to revise the toxicity control provisions in the SIP. The State Water Board states the following in WQO 2003-0012, "*In reviewing this petition and receiving comments from numerous interested persons on the propriety of including numeric effluent limitations for chronic toxicity in NPDES permits for publicly-owned treatment works that discharge to inland waters, we have determined that this issue should be considered in a regulatory setting, in order to allow for full public discussion and deliberation. We intend to modify the SIP to specifically address the issue. We anticipate that review will occur within the next year. We therefore decline to make a determination here regarding the propriety of the final numeric effluent limitations for chronic toxicity contained in these permits.*" The process to revise the SIP is currently underway. Proposed changes include clarifying the appropriate form of effluent toxicity limitations in NPDES permits and general expansion and standardization of toxicity control implementation related to the NPDES permitting process. Since the toxicity control provisions in the SIP are under revision it is infeasible to develop numeric effluent limitations for chronic toxicity. Therefore, this Order requires that the Discharger meet best management practices for compliance with the Basin Plan's narrative toxicity objective, as allowed under 40 CFR 122.44(k).

To ensure compliance with the Basin Plan's narrative toxicity objective, the Discharger is required to conduct chronic WET testing, as specified in the Monitoring and Reporting Program (Attachment E, section V.). Furthermore, Special Provision VI.C.2.a of this Order requires the Discharger to investigate the causes of, and identify and implement corrective actions to reduce or eliminate effluent toxicity. If the discharge demonstrates

[12] In the Matter of the Review of Own Motion of Waste Discharge Requirements Order Nos. R4-2002-0121 [NPDES No. CA0054011] and R4-2002-0123 [NPDES NO. CA0055119] and Time Schedule Order Nos. R4-2002-0122 and R4-2002-0124 for Los Coyotes and Long Beach Wastewater Reclamation Plants Issued by the California Regional Water Quality Control Board, Los Angeles Region SWRCB/OCC Files A-1496 and 1496(a).

toxicity exceeding the numeric toxicity monitoring trigger, the Discharger is required to initiate a Toxicity Reduction Evaluation (TRE) in accordance with an approved TRE work plan. The numeric toxicity monitoring trigger is not an effluent limitation; it is the toxicity threshold at which the Discharger is required to perform accelerated chronic toxicity monitoring, as well as, the threshold to initiate a TRE if effluent toxicity has been demonstrated.

**D. Basin Plan Effluent Limitations.**

1. The Basin Plan at page IV-10 includes effluent limitations for discharges to navigable waters. The Basin Plan requires at a minimum, discharges to surface waters, including stream channels, to comply with the following effluent limitations:

   a. The maximum electrical conductivity of a discharge shall not exceed the quality of the source water plus 500 µmhos/cm, or 1,000 µmhos/cm, whichever is more stringent.

   b. Discharges shall not exceed an electrical conductivity of 1,000 µmhos/cm, a chloride content of 175 mg/L, or a boron content of 1.0 mg/L.

2. This Order carries over the chloride and boron effluent limitations in Order R5-2008-0033, which are based on the Basin Plan effluent limitations. This Order also carries over an effluent limitation for electrical conductivity, based on the Basin Plan, but establishes the averaging period as a 12-month rolling average instead of a monthly average.

**E. Final Effluent Limitation Considerations**

**1. Mass-based Effluent Limitations**

40 CFR 122.45(f)(1) requires effluent limitations be expressed in terms of mass, with some exceptions, and 40 CFR 122.45(f)(2) allows pollutants that are limited in terms of mass to additionally be limited in terms of other units of measurement. This Order includes effluent limitations expressed in terms of mass and concentration. In addition, pursuant to the exceptions to mass limitations provided in 40 CFR 122.45(f)(1), some effluent limitations are not expressed in terms of mass, such as pH and temperature, and when the applicable standards are expressed in terms of concentration (e.g., CTR criteria and MCLs) and mass limitations are not necessary to protect the beneficial uses of the receiving water.

Mass-based effluent limitations were calculated based upon the flow permitted in section IV.B.1.a of this Order.

**2. Averaging Periods for Effluent Limitations**

40 CFR 122.45(d) requires average weekly and average monthly discharge limitations for publicly owned treatment works (POTWs) unless impracticable. However, for toxic pollutants and pollutant parameters in water quality permitting, U.S. EPA recommends the use of a maximum daily effluent limitation in lieu of average weekly effluent limitations for two reasons. "*First, the basis for the 7-day average for POTWs derives from the secondary treatment requirements. This basis is not related to the need for assuring achievement of water quality standards. Second, a 7-day average, which could comprise up to seven or more daily samples, could average out peak toxic concentrations and therefore the discharge's potential for causing acute toxic effects would be missed.*" (TSD, pg. 96) This Order uses maximum daily effluent limitations in lieu of average weekly effluent limitations for copper and cyanide as recommended by the TSD for the achievement of water quality standards and for the protection of the beneficial uses of the receiving stream. Furthermore, for copper and cyanide, weekly average effluent limitations have been replaced or supplemented with effluent limitations utilizing shorter averaging periods. The rationale for

using shorter averaging periods for these constituents is discussed in section IV.C.3 of this Fact Sheet.

For effluent limitations based on Primary and Secondary MCLs, except nitrate and nitrite, this Order includes annual average effluent limitations. The Primary and Secondary MCLs are drinking water standards contained in Title 22 of the California Code of Regulations. Title 22 requires compliance with these standards on an annual average basis (except for nitrate and nitrite), when sampling at least quarterly. Since it is necessary to determine compliance on an annual average basis, it is impracticable to calculate average weekly and average monthly effluent limitations.

**3. Satisfaction of Anti-Backsliding Requirements**

The CWA specifies that a revised permit may not include effluent limitations that are less stringent than the previous permit unless a less stringent limitation is justified based on exceptions to the anti-backsliding provisions contained in CWA sections 402(o) or 303(d)(4), or, where applicable, 40 CFR 122.44(l).

The effluent limitations in this Order are at least as stringent as the effluent limitations in the previous Order, with the exception of effluent limitations for bromoform, total residual chlorine, chlorodibromomethane, dichlorobromomethane, settleable solids, and turbidity. The effluent limitations for these pollutants are less stringent than those in Order R5-2008-0033. This relaxation of effluent limitations is consistent with the anti-backsliding requirements of the CWA and federal regulations.

a. **CWA section 402(o)(1) and 303(d)(4).** CWA section 402(o)(1) prohibits the establishment of less stringent water quality-based effluent limits "*except in compliance with Section 303(d)(4).*" CWA section 303(d)(4) has two parts: paragraph (A) which applies to nonattainment waters and paragraph (B) which applies to attainment waters.

   i. For waters where standards are not attained, CWA section 304(d)(4)(A) specifies that any effluent limitation based on a TMDL or other WLA may be revised only if the cumulative effect of all such revised effluent limitations based on such TMDLs or WLAs will assure the attainment of such water quality standards.

   ii. For attainment waters, CWA section 303(d)(4)(B) specifies that a limitation based on a water quality standard may be relaxed where the action is consistent with the antidegradation policy.

   Central Canal is considered an attainment water for bromoform, total residual chlorine, chlorodibromomethane, dichlorobromomethane, and settleable solids because the receiving water is not listed as impaired on the 303(d) list for these constituents.[13] As discussed in section IV.E.4, below, removal of the effluent limitations complies with federal and state antidegradation requirements. Thus, removal of the effluent limitations for bromoform, total residual chlorine, chlorodibromomethane, dichlorobromomethane, and settleable solids from Order R5-2008-0033 meets the exception in CWA section 303(d)(4)(B).

b. **CWA section 402(o)(2).** CWA section 402(o)(2) provides several exceptions to the anti-backsliding regulations. CWA 402(o)(2)(B)(i) allows a renewed, reissued, or modified permit to contain a less stringent effluent limitation for a pollutant if information is available which was not available at the time of permit issuance (other than revised

[13] "*The exceptions in Section 303(d)(4) address both waters in attainment with water quality standards and those not in attainment, i.e. waters on the section 303(d) impaired waters list.*" State Water Board Order WQ 2008-0006, Berry Petroleum Company, Poso Creek/McVan Facility.

regulations, guidance, or test methods) and which would have justified the application of a less stringent effluent limitation at the time of permit issuance.

As described further in section IV.C.3.a of this Fact Sheet, updated information that was not available at the time Order R5-2008-0033 was issued indicates that bromoform, total residual chlorine, chlorodibromomethane, dichlorobromomethane, and settleable solids do not exhibit reasonable potential to cause or contribute to an exceedance of water quality objectives in the receiving water. Additionally, updated information that was not available at the time Order R5-2008-0033 was issued indicates that less stringent effluent limitations for bromoform, total residual chlorine, chlorodibromomethane, dichlorobromomethane, and settleable solids satisfy requirements in CWA section 402(o)(2). The updated information that supports the relaxation of effluent limitations for these constituents includes the following:

i. **Bromoform.** Bromoform is a chlorine disinfection byproduct and the Discharger no longer uses chlorine for disinfection. Effluent and receiving water monitoring data collected between January 2010 and December 2013 for bromoform indicate that the discharge does not exhibit reasonable potential to cause or contribute to an exceedance of the CTR human health criterion for the consumption of water and organisms.

ii. **Chlorine Residual.** The Discharger converted from chorine disinfection to ultraviolet light disinfection in December 2009. Total residual chlorine was not detected in the effluent between January 2010 and December 2013. Therefore, there is no reasonable potential to cause or contribute to an exceedance of the NAWQC criterion for chlorine.

iii. **Chlorodibromomethane.** Chlorodibromomethane is a chlorine disinfection byproduct and the Discharger no longer uses chlorine for disinfection. Effluent and receiving water monitoring data collected between January 2010 and December 2013 for chlorodibromomethane indicate that the discharge does not exhibit reasonable potential to cause or contribute to an exceedance of the CTR human health criterion for the consumption of water and organisms.

iv. **Dichlorobromomethane.** Dichlorobromomethane is a chlorine disinfection byproduct and the Discharger no longer uses chlorine for disinfection. Effluent and receiving water monitoring data collected between January 2010 and December 2013 for dichlorobromomethane indicate that the discharge does not exhibit reasonable potential to cause or contribute to an exceedance of the CTR human health criterion for the consumption of water and organisms.

v. **Settleable Solids.** Effluent and receiving water monitoring data collected between January 2010 and December 2013 for settleable solids indicate that the discharge does not exhibit reasonable potential to cause or contribute to an exceedance of the Basin Plan narrative objective for settleable solids.

Thus, removal or relaxation of the effluent limitations for bromoform, total residual chlorine, chlorodibromomethane, dichlorobromomethane, and settleable solids from Order R5-2008-0033 is in accordance with CWA section 402(o)(2)(B)(i), which allows for the removal of effluent limitations based on information that was not available at the time of permit issuance.

Effluent and receiving water monitoring data collected between January 2010 and December 2013 indicate that bromoform, total residual chlorine, chlorodibromomethane, dichlorobromomethane, and settleable solids in the discharge do not exhibit reasonable potential to cause or contribute to an exceedance of the applicable water quality

objectives. Therefore, the effluent limitations for bromoform, total residual chlorine, chlorodibromomethane, dichlorobromomethane, and settleable solids have not been continued. Removal of the effluent limitations meets the exceptions to backsliding in CWA section 402(o)(2).

c. **Turbidity.** Order R5-2008-0033 contained effluent limitations for turbidity. The prior limitations were solely an operational check to ensure the treatment system was functioning properly and could meet the limitations for solids and coliform. The prior effluent limitations were not intended to regulate turbidity in the receiving water. Rather, turbidity is an operational parameter to determine proper system functioning and not a WQBEL.

This Order contains operational turbidity specifications to be met in lieu of effluent limitations. However, the performance-based specifications in this Order are equivalent limitations that are not less stringent, and therefore do not constitute backsliding.

The revised operational specifications for turbidity are the same as the effluent limitations in Order R5-2008-0033. These revisions are consistent with State regulations implementing recycled water requirements. The revision in the turbidity limitation is consistent with the antidegradation provisions of 40 CFR 131.12 and State Water Board Resolution 68-16 because this Order imposes equivalent or more stringent requirements than Order R5-2008-0033 and therefore does not allow degradation.

**4. Antidegradation Policies**

a. **Surface Water.** This Order does not authorize an increase in flow or mass of pollutants to Central Canal from that allowed in Order R5-2008-0033. Thus, the permitted surface water discharge is consistent with the antidegradation provisions of 40 CFR 131.12 and State Water Board Resolution 68-16. Compliance with these requirements will result in the use of best practicable treatment or control of the discharge. The impact on existing water quality will be insignificant.

b. **Groundwater.** The Discharger utilizes evaporation/percolation ponds for effluent disposal. Domestic wastewater contains constituents such as total dissolved solids (TDS), electrical conductivity, pathogens, nitrates, organics, metals and oxygen demanding substances (BOD). Percolation from the ponds may result in an increase in the concentration of these constituents in groundwater. The increase in the concentration of these constituents in groundwater must be consistent with Resolution 68-16. Any increase in pollutant concentrations in groundwater must be shown to be necessary to allow wastewater utility service necessary to accommodate housing and economic expansion in the area and must be consistent with maximum benefit to the people of the State of California. Some degradation of groundwater by the Discharger is consistent with Resolution 68-16 provided that:

i. the degradation is limited in extent;

ii. the degradation after effective source control, treatment, and control is limited to waste constituents typically encountered in municipal wastewater as specified in the groundwater limitations in this Order;

iii. the Discharger minimizes the degradation by fully implementing, regularly maintaining, and optimally operating best practicable treatment or control (BPTC) measures; and

iv. the degradation does not result in water quality less than that prescribed in the Basin Plan.

Adequate background groundwater quality data are not available for comparing to downgradient groundwater monitoring data. This Order requires the Discharger to monitor groundwater.

**5. Stringency of Requirements for Individual Pollutants**

This Order contains both technology-based and water quality-based effluent limitations for individual pollutants. The technology-based effluent limitation consists of restrictions on flow. Restrictions on flow are discussed in IV.B and II.B.3 of this Fact Sheet. This Order's technology-based pollutant restrictions implement the minimum, applicable federal technology-based requirements. In addition, this Order contains effluent limitations more stringent than the minimum, federal technology-based requirements that are necessary to meet water quality standards. These limitations are not more stringent than required by the CWA.

Water quality-based effluent limitations have been derived to implement water quality objectives that protect beneficial uses. Both the beneficial uses and the water quality objectives have been approved pursuant to federal law and are the applicable federal water quality standards. To the extent that toxic pollutant water quality-based effluent limitations were derived from the CTR, the CTR is the applicable standard pursuant to 40 CFR 131.38. The procedures for calculating the individual water quality-based effluent limitations for priority pollutants are based on the CTR implemented by the SIP, which was approved by U.S. EPA on 18 May 2000. Most beneficial uses and water quality objectives contained in the Basin Plan were approved under state law and submitted to and approved by U.S. EPA prior to 30 May 2000. Any water quality objectives and beneficial uses submitted to U.S. EPA prior to 30 May 2000, but not approved by U.S. EPA before that date, are nonetheless "*applicable water quality standards for purposes of the CWA*" pursuant to 40 CFR 131.21(c)(1). The remaining water quality objectives and beneficial uses implemented by this Order were approved by U.S. EPA and are applicable water quality standards pursuant to 40 CFR 131.21(c)(2). Collectively, this Order's restrictions on individual pollutants are no more stringent than required to implement the requirements of the CWA.

**Summary of Final Effluent Limitations**
**Discharge Point 001**

**Table F-18. Summary of Final Effluent Limitations**

| Parameter | Units | Effluent Limitations | | | | | Basis |
|---|---|---|---|---|---|---|---|
| | | Average Monthly | Average Weekly | Maximum Daily | Instantaneous Minimum | Instantaneous Maximum | |
| Flow | mgd | 0.45 | -- | -- | -- | -- | PO, DC |
| Biochemical Oxygen Demand 5-day @ 20°C ($BOD_5$) | mg/L | 10 | 15 | 30 | -- | -- | PO, DC, TTC |
| | lbs/day | 38 | 56 | 113 | -- | -- | PO, DC, TTC |
| | % removal | (see below) | -- | -- | -- | -- | PO, DC, TTC |
| Total Suspended Solids (TSS) | mg/L | 10 | 15 | 30 | -- | -- | PO, DC, TTC |
| | lbs/day | 38 | 56 | 113 | -- | -- | PO, DC, TTC |
| | % removal | (see below) | -- | -- | -- | -- | PO, DC, TTC |
| pH | standard units | -- | -- | -- | 6.5 | 8.3 | PO, BP |

| Parameter | Units | Effluent Limitations | | | | | Basis |
|---|---|---|---|---|---|---|---|
| | | Average Monthly | Average Weekly | Maximum Daily | Instantaneous Minimum | Instantaneous Maximum | |
| Copper, Total Recoverable | µg/L | 6.5 | -- | 12 | -- | -- | CTR |
| Cyanide, Total (as CN) | µg/L | 4.2 | -- | 8.7 | -- | -- | CTR |
| Aluminum, Total Recoverable | µg/L | 341 | 761 | -- | -- | -- | SMCL |
| Ammonia, un-ionized (as N) | mg/L | -- | -- | 0.025 | -- | -- | BP |
| Boron | mg/L | -- | -- | 1.0 | -- | -- | PO, BPL |
| Chloride | mg/L | -- | -- | 175 | -- | -- | PO, BPL |
| Electrical Conductivity @ 25°C | µmhos/cm | (see below) | | | | | BPL |
| Nitrate plus Nitrite (as N) | mg/L | 10. | -- | -- | -- | -- | PMCL |
| Total Coliform | MPN/100 mL | (see below) | | | | | PO, T22 |
| Acute Toxicity | % survival | (see below) | | | | | PO, BP |
| Chronic Toxicity | -- | (see below) | | | | | BP |

PO – Carried over from previous Order (R5-2008-0033)
DC – Based on the design capacity of the Facility
TTC – Based on tertiary treatment capability. These effluent limitations reflect the capability of a properly operated tertiary treatment plant.
BP – Based on water quality objectives contained in the Basin Plan
CTR – Based on water quality criteria contained in the California Toxics Rule and applied as specified in the SIP
SMCL – Based on the Secondary Maximum Contaminant Level.
BPL – Based on limitations in the Basin Plan, applicable to all surface waters
PMCL – Based on the Primary Maximum Contaminant Level.
T22 – Based on California Department of Public Health Reclamation Criteria, CCR, Division 4, Chapter 3 (Title 22).

a. **Percent Removal.** The average monthly percent removal of $BOD_5$ and TSS shall not be less than 90 percent.

b. **Acute Whole Effluent Toxicity.** Survival of aquatic organisms in 96-hour bioassays of undiluted waste shall be no less than:

   i. 70%, minimum for any one bioassay;

   ii. 90%, median for any three consecutive bioassays.

c. **Chronic Whole Effluent Toxicity.** There shall be no chronic toxicity in the effluent discharge.

d. **Total Coliform.** Effluent total coliform shall not exceed:

   i. 2.2 most probable number (MPN) per 100 mL, as a 7-sample median;

   ii. 23 MPN/100 mL, more than once in any 30-day period; and

   iii. 240 MPN/100 mL, at any time.

e. **Electrical Conductivity @ 25°C (EC).** The 12-month rolling average effluent EC shall not exceed 1,000 µmhos/cm or the monthly flow-weighted average EC of the source water plus 500 µmhos/cm, whichever is more stringent.

### F. Interim Effluent Limitations – Not Applicable

### G. Land Discharge Specifications

The Land Discharge Specifications for the onsite disposal ponds are necessary to ensure proper operation of the ponds and to protect the beneficial uses of the groundwater.

1. **BOD and TSS.** This Order carries over the BOD and TSS effluent limitations from Order R5-2008-0033 for discharge to the onsite disposal ponds.
2. **pH.** This Order carries over the pH effluent limitations from Order R5-2008-0033 for discharge to the onsite disposal ponds.
3. **Settleable Solids.** This Order carries over the settleable solids effluent limitations from Order R5-2008-0033 for discharge to the onsite disposal ponds.
4. **Basin Plan Effluent Limitations.** This Order carries over the effluent limitations for EC and chloride, which were applicable to both discharge locations in Order R5-2008-0033, and which are based on the Basin Plan limitations. This Order includes a boron effluent limitation based on the Basin Plan limitation.
5. **Flow.** As discussed in section II.B.3 of this Fact Sheet, the Discharger has had ongoing disposal capacity issues with the onsite disposal ponds for a number of years. This Order limits the flow to the onsite disposal ponds to 0.49 mgd, as a monthly average, and gives the Discharger an opportunity to request to increase the flow to the ponds up to 0.85 mgd if it can demonstrate to the satisfaction of the Executive Officer that the ponds have enough capacity to accommodate those flows.

### H. Recycling Specifications – Not Applicable

## V. RATIONALE FOR RECEIVING WATER LIMITATIONS

### A. Surface Water

1. CWA section 303(a-c), requires states to adopt water quality standards, including criteria where they are necessary to protect beneficial uses. The Central Valley Water Board adopted water quality criteria as water quality objectives in the Basin Plan. The Basin Plan states that "*[t]he numerical and narrative water quality objectives define the least stringent standards that the Regional Water Board will apply to regional waters in order to protect the beneficial uses.*" The Basin Plan includes numeric and narrative water quality objectives for various beneficial uses and water bodies. This Order contains receiving surface water limitations based on the Basin Plan numerical and narrative water quality objectives for ammonia, bacteria, biostimulatory substances, color, chemical constituents, dissolved oxygen, floating material, oil and grease, pH, pesticides, radioactivity, suspended sediment, settleable substances, suspended material, tastes and odors, temperature, toxicity, and turbidity.

### B. Groundwater

1. The beneficial uses of the underlying groundwater are municipal and domestic supply, agricultural supply, industrial service supply, industrial process supply, contact recreation, and non-contact recreation.
2. Basin Plan water quality objectives include narrative objectives for bacteria, chemical constituents, pesticides, radioactivity, salinity, tastes and odors, and toxicity of groundwater. The bacteria objective prohibits total coliform at or above 2.2 MPN/100 mL for waters

designated MUN. The chemical constituents objective states groundwater shall not contain chemical constituents in concentrations that adversely affect any beneficial use. The pesticide objective states that no individual pesticide or combination of pesticides shall be present in concentrations that adversely affect beneficial uses. The radioactivity objective prohibits radionuclides to be present in concentrations that are deleterious to human, plant, animal or aquatic life, or that result in the accumulation of radionuclides in the food web to an extent that presents a hazard to human, plant, animal, or aquatic life. The salinity objective includes maximum average annual increases in salinity for specific groundwater basins. The tastes and odors objective prohibits taste- or odor-producing substances in concentrations that cause nuisance or adversely affect beneficial uses. The toxicity objective requires that groundwater be maintained free of toxic substances in concentrations that produce detrimental physiological responses in humans, plants, animals, or aquatic life. The Basin Plan requires the application of the most stringent objective necessary to ensure that waters do not contain chemical constituents, toxic substances, radionuclides, taste- or odor-producing substances, or bacteria in concentrations that adversely affect municipal or domestic supply, agricultural supply, industrial supply or some other beneficial use.

3. Groundwater limitations are required to protect the beneficial uses of the underlying groundwater.

## VI. RATIONALE FOR PROVISIONS

### A. Standard Provisions

Standard Provisions, which apply to all NPDES permits in accordance with 40 CFR 122.41, and additional conditions applicable to specified categories of permits in accordance with 40 CFR 122.42, are provided in Attachment D. The Discharger must comply with all standard provisions and with those additional conditions that are applicable under 40 CFR 122.42.

40 CFR 122.41(a)(1) and (b) through (n) establish conditions that apply to all state-issued NPDES permits. These conditions must be incorporated into the permits either expressly or by reference. If incorporated by reference, a specific citation to the regulations must be included in the Order. 40 CFR 123.25(a)(12) allows the state to omit or modify conditions to impose more stringent requirements. In accordance with 40 CFR 123.25, this Order omits federal conditions that address enforcement authority specified in 40 CFR 122.41(j)(5) and (k)(2) because the enforcement authority under the Water Code is more stringent. In lieu of these conditions, this Order incorporates by reference Water Code section 13387(e).

### B. Special Provisions

#### 1. Reopener Provisions

a. **Whole Effluent Toxicity.** This Order requires the Discharger to investigate the causes of, and identify corrective actions to reduce or eliminate effluent toxicity through a Toxicity Reduction Evaluation (TRE). This Order may be reopened to include a numeric chronic toxicity effluent limitation, new acute toxicity effluent limitations, and/or effluent limitations for specific toxicant(s) identified in the TRE. Additionally, if a numeric chronic toxicity water quality objective is adopted by the State Water Board, this Order may be reopened to include a numeric chronic toxicity effluent limitation based on that objective.

b. **Water Effects Ratio (WER) and Metal Translators.** A default WER of 1.0 has been used in this Order for calculating CTR criteria for applicable priority pollutant inorganic constituents. In addition, default dissolved-to-total metal translators have been used to convert water quality objectives from dissolved to total recoverable when developing effluent limitations for copper. If the Discharger performs studies to determine site-

specific WERs and/or site-specific dissolved-to-total metal translators, this Order may be reopened to modify the effluent limitations for the applicable inorganic constituent(s).

c. **Drinking Water Policy.** The Central Valley Water Board adopted a Drinking Water Policy. This Order may be reopened to incorporate monitoring of constituents to implement the Drinking Water Policy.

d. **Ultraviolet (UV) Disinfection Operating Specifications.** UV disinfection system operating specifications are required to ensure that the UV system is operated to achieve the required pathogen removal. UV disinfection system specifications and monitoring and reporting requirements are required to ensure that adequate UV dosage is applied to the wastewater to inactivate pathogens (e.g., viruses) in the wastewater. UV dosage is dependent on several factors such as UV transmittance, UV power setting, wastewater turbidity, and wastewater flow through the UV disinfection system. The UV specifications in this Order are based on the NWRI guidelines. If the Discharger conducts a site-specific UV engineering study that identifies site-specific UV operating specifications that will achieve the virus inactivation required by Title 22 for disinfected tertiary recycled water, this Order may be reopened to modify the UV specifications.

e. **Beneficial Use Dedesignation.** If the Discharger pursues a dedesignation study by providing all necessary information for a Basin Plan amendment to dedesignate beneficial uses for Central Canal, and those efforts result in a Basin Plan amendment, this Order shall be reopened to implement the necessary changes.

**2. Special Studies and Additional Monitoring Requirements**

a. **Chronic Whole Effluent Toxicity Requirements.** The Basin Plan contains a narrative toxicity objective that states, "*All waters shall be maintained free of toxic substances in concentrations that produce detrimental physiological responses in human, plant, animal, or aquatic life.*" (Basin Plan at page III-6) Based on whole effluent chronic toxicity testing performed by the Discharger from January 2010 through December 2013, the discharge has reasonable potential to cause or contribute to an in-stream excursion above of the Basin Plan's narrative toxicity objective.

This provision requires the Discharger to develop a TRE Work Plan in accordance with U.S. EPA guidance. In addition, the provision provides a numeric toxicity monitoring trigger and requirements for accelerated monitoring, as well as, requirements for TRE initiation if toxicity has been demonstrated.

**Monitoring Trigger.** A numeric toxicity monitoring trigger of >1 TUc (where TUc = 100/NOEC) is applied in the provision, because this Order does not allow any dilution for the chronic condition. Therefore, a TRE is triggered when the effluent exhibits toxicity at 100% effluent.

**Accelerated Monitoring.** The provision requires accelerated WET testing when a regular WET test result exceeds the monitoring trigger. The purpose of accelerated monitoring is to determine, in an expedient manner, whether there is toxicity before requiring the implementation of a TRE. Due to possible seasonality of the toxicity, the accelerated monitoring should be performed in a timely manner, preferably taking no more than 2 to 3 months to complete.

The provision requires accelerated monitoring consisting of four chronic toxicity tests in a six-week period (i.e., one test every two weeks) using the species that exhibited toxicity. Guidance regarding accelerated monitoring and TRE initiation is provided in the *Technical Support Document for Water Quality-based Toxics Control,* EPA/505/2-90-001, March 1991 (TSD). The TSD at page 118 states, "*EPA recommends if toxicity is*

*repeatedly or periodically present at levels above effluent limits more than 20 percent of the time, a TRE should be required.*" Therefore, four accelerated monitoring tests are required in this provision. If no toxicity is demonstrated in the four accelerated tests, then it demonstrates that toxicity is not present at levels above the monitoring trigger more than 20 percent of the time (only 1 of 5 tests are toxic, including the initial test). However, notwithstanding the accelerated monitoring results, if there is adequate evidence of effluent toxicity (i.e., toxicity present exceeding the monitoring trigger more than 20 percent of the time), the Executive Officer may require that the Discharger initiate a TRE.

See the WET Accelerated Monitoring Flow Chart (Figure F-1), below, for further clarification of the accelerated monitoring requirements and for the decision points for determining the need for TRE initiation.

**TRE Guidance.** The Discharger is required to prepare a TRE work plan in accordance with U.S. EPA guidance. Numerous guidance documents are available, as identified below:

i. *Toxicity Reduction Evaluation Guidance for Municipal Wastewater Treatment Plants*, EPA/833-B-99/002, August 1999.

ii. *Generalized Methodology for Conducting Industrial Toxicity Reduction Evaluations (TREs)*, EPA/600/2-88/070, April 1989.

iii. *Methods for Aquatic Toxicity Identification Evaluations: Phase I Toxicity Characterization Procedures*, Second Edition, EPA 600/6-91/003, February 1991.

iv. *Toxicity Identification Evaluation: Characterization of Chronically Toxic Effluents, Phase I*, EPA/600/6-91/005F, May 1992.

v. *Methods for Aquatic Toxicity Identification Evaluations: Phase II Toxicity Identification Procedures for Samples Exhibiting Acute and Chronic Toxicity*, Second Edition, EPA/600/R-92/080, September 1993.

vi. *Methods for Aquatic Toxicity Identification Evaluations: Phase III Toxicity Confirmation Procedures for Samples Exhibiting Acute and Chronic Toxicity*, Second Edition, EPA 600/R-92/081, September 1993.

vii. *Methods for Measuring the Acute Toxicity of Effluents and Receiving Waters to Freshwater and Marine Organisms*, Fifth Edition, EPA-821-R-02-012, October 2002.

viii. *Short-term Methods for Estimating the Chronic Toxicity of Effluents and Receiving Waters to Freshwater Organisms*, Fourth Edition, EPA-821-R-02-013, October 2002.

ix. *Technical Support Document for Water Quality-based Toxics Control*, EPA/505/2-90-001, March 1991.

**Figure F-1**
**WET Accelerated Monitoring Flow Chart**

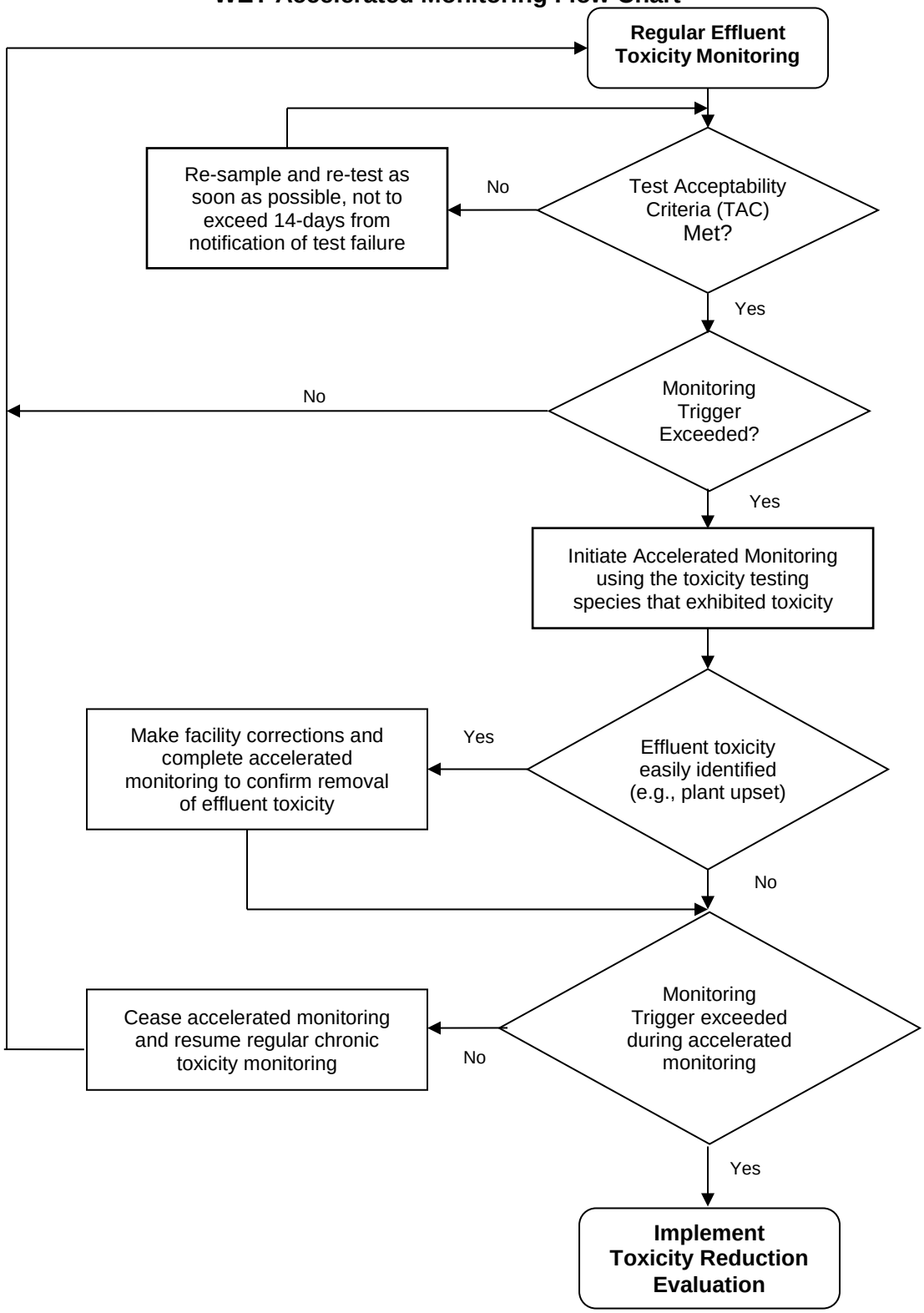

b. **Request for Increase in Flow.** This Order includes an effluent limitation for flow at Discharge Point 002 (disposal ponds) that is lower than the effluent limitation for flow at Discharge Point 002 in previous Order R5-2008-0033. The lower flow limitation is based on information provided by the Discharger, which indicates the ponds have a lower disposal capacity than 0.85 mgd (see Section II.B.3 of this Fact Sheet for further details). This Order allows the Discharger to request an increase in flow to Discharge Point 002, up to 0.85 mgd, if it provides necessary information and conducts necessary and ongoing maintenance work to the ponds to improve disposal capacity.

**3. Best Management Practices and Pollution Prevention**

a. **Salinity Evaluation and Minimization Plan.** An Evaluation and Minimization Plan for salinity is required in this Order to ensure adequate measures are developed and implemented by the Discharger to reduce the discharge of salinity to Central Canal.

**4. Construction, Operation, and Maintenance Specifications**

a. The operation and maintenance specifications for this Facility are necessary to prevent nuisance conditions. Most of the specifications included in this Order are retained from Order R5-2008-0033.

b. **Filtration System Operating Specifications.** Operational specifications for turbidity are included as an indicator of the effectiveness of the treatment process and to ensure compliance with effluent limitations for total coliform. The tertiary treatment process at the Facility is capable of reliably meeting a turbidity lower than 2 NTU. Failure of the treatment system such that virus removal is impaired would normally result in increased particles in the effluent, which can result in higher effluent turbidity. Turbidity has a major advantage for monitoring filter performance, allowing immediate detection of filter failure, and rapid corrective action. The operational specifications for turbidity included in this Order are specified in Title 22, CCR, section 60301.320 and 60304.

c. **Ultraviolet Light (UV) Disinfection System Operating Specifications.** This Order requires that wastewater discharged to Discharge Point 001 shall be oxidized, coagulated, filtered, and adequately disinfected consistent with the CDPH reclamation criteria, CCR, Title 22, division 4, chapter 3, (Title 22), or equivalent. To ensure that the UV disinfection system is operated to achieve the required pathogen removal, this Order includes effluent limitations for total coliform, filtration system operating specifications, and UV Disinfection System operating specifications. Compliance with total coliform effluent limitations alone does not ensure that pathogens in the municipal wastewater have been deactivated by the UV disinfection system. Compliance with the effluent limitations and the filtration system and UV disinfection operating specifications demonstrates compliance with the equivalency to Title 22 disinfection requirement.

**5. Special Provisions for Municipal Facilities (POTWs Only)**

a. **Pretreatment Requirements.**

i. The federal CWA section 307(b), and federal regulations, 40 CFR Part 403, require publicly owned treatment works to develop an acceptable industrial pretreatment program. A pretreatment program is required to prevent the introduction of pollutants, which will interfere with treatment plant operations or sludge disposal, and prevent pass through of pollutants that exceed water quality objectives, standards or permit limitations. Pretreatment requirements are imposed pursuant to 40 CFR Part 403.

ii. The Discharger shall implement and enforce its approved pretreatment program and is an enforceable condition of this Order. If the Discharger fails to perform the

pretreatment functions, the Central Valley Water Board, the State Water Board or U.S. EPA may take enforcement actions against the Discharger as authorized by the CWA.

b. **Biosolids.** The sludge/biosolids provision is required to ensure compliance with State disposal requirements (Title 27, CCR, division 2, subdivision 1, section 20005, et seq.) and U.S. EPA sludge/biosolids use and disposal requirements at 40 CFR Part 503.

c. **Collection System.** The State Water Board issued General Waste Discharge Requirements for Sanitary Sewer Systems, Water Quality Order 2006-0003-DWQ (General Order) on 2 May 2006. The General Order requires public agencies that own or operate sanitary sewer systems with greater than one mile of pipes or sewer lines to enroll for coverage under the General Order. The General Order requires agencies to develop sanitary sewer management plans (SSMPs) and report all sanitary sewer overflows (SSOs), among other requirements and prohibitions.

Furthermore, the General Order contains requirements for operation and maintenance of collection systems and for reporting and mitigating sanitary sewer overflows. The Discharger is enrolled under the General Order.

d. **Anaerobically Digestible Material.** Managers of POTWs increasingly are considering the addition of organic material such as food waste, fats, oils and grease (FOG) into their anaerobic digesters for co-digestion. Benefits of accepting these materials include increasing the volume of methane and other biogases available for energy production and ensuring such materials are disposed of at the POTW instead of discharged into the collection system potentially causing sanitary sewer overflows. The State Water Board has been working with the California Department of Resources Recycling and Recovery (CalRecycle), the California Department of Food and Agriculture (CDFA), and the California Association of Sanitation Agencies (CASA) to delineate jurisdictional authority for the receipt of hauled-in anaerobically digestible material (ADM) at POTWs for co-digestion.

CalRecycle is proposing an exclusion from Process Facility/Transfer Station permits for direct injection of ADM to POTW anaerobic digesters for co-digestion that are regulated under waste discharge requirements or NPDES permits. The proposed CalRecycle exclusion is restricted to ADM that has been prescreened, slurried, and processed/conveyed in a closed system to be co-digested with regular POTW sludge. The CalRecycle exclusion assumes that a POTW has developed Standard Operating Procedures (SOPs) for the proper handling, processing, tracking, and management of the ADM received.

The Discharger currently does not accept hauled-in ADM for direct injection into its anaerobic digesters for co-digestion because it does not have anaerobic digesters. However, if the Discharger proposes to receive hauled-in ADM for injection into its anaerobic digester for co-digestion if it ever switches to anaerobic digestion, this provision requires the Discharger to notify the Central Valley Water Board and develop and implement SOPs for this activity prior to initiation of the hauling. The requirements of the SOPs are discussed in the provision.

**6. Other Special Provisions**

a. Consistent with Order R5-2008-0033, this Order requires wastewater to be oxidized, coagulated, filtered, and adequately disinfected consistent with CDPH reclamation criteria at Title 22, CCR, division 4, chapter 3, or equivalent.

b. Consistent with a letter from Fresno Irrigation District to the Central Valley Water Board, dated 25 June 2014, this Order requires the Discharger to cease discharging to Central Canal during months when there are no irrigation water deliveries, beginning at the expiration date of this Order. The Discharger shall not discharge to Central Canal when dilution is less than 20:1. Between the effective and expiration dates of this Order, the Discharger may discharge to Central Canal, in accordance with Limitation IV.A.1.a. Beginning on **<permit expiration date>**, the Discharger shall work with Fresno Irrigation District personnel each year to determine when the irrigation water delivery period begins and ends, and shall provide that information to the Central Valley Water Board.

c. This Order does not automatically grant the Discharger rights to discharge to Central Canal. The Discharger shall work with Fresno Irrigation District, or any subsequent owner or operator of Central Canal, to ensure the discharge to Central Canal is allowed.

d. This Order requires the Discharger to maintain a copy of its operations and maintenance manual onsite (at the Facility) and update the manual periodically, as necessary.

**7. Compliance Schedules – Not Applicable**

## VII. RATIONALE FOR MONITORING AND REPORTING REQUIREMENTS

CWA section 308 and 40 CFR sections 122.41(h), (j)-(l), 122.4(i), and 122.48 require that all NPDES permits specify requirements for recording and reporting monitoring results. Water Code sections 13267 and 13383 authorize the Central Valley Water Board to establish monitoring, inspection, entry, reporting, and recordkeeping requirements. The Monitoring and Reporting Program (MRP), Attachment E of this Order, establishes monitoring, reporting, and recordkeeping requirements that implement federal and state requirements. The following provides the rationale for the monitoring and reporting requirements contained in the MRP for this Facility.

### A. Influent Monitoring

1. Influent monitoring is required to collect data on the characteristics of the wastewater and to assess compliance with effluent limitations (e.g., $BOD_5$ and TSS reduction requirements). The monitoring frequencies for flow, BOD, and TSS (1/week) have been retained from Order R5-2008-0033.

2. This Order includes new monitoring requirements at the influent location for EC, pH, and oil and grease. The new monitoring is required to determine influent characteristics and assist, partly, in assessing if the Discharger is properly implementing its pretreatment program.

### B. Effluent Monitoring

1. Pursuant to the requirements of 40 CFR 122.44(i)(2), effluent monitoring is required for all constituents with effluent limitations. Effluent monitoring is necessary to assess compliance with effluent limitations, assess the effectiveness of the treatment process, and to assess the impacts of the discharge on the receiving stream and groundwater.

2. Effluent monitoring frequencies and sample types for flow (continuous), BOD (weekly), TSS (weekly), pH (daily), copper (monthly), cyanide (monthly), aluminum (monthly), ammonia as N (monthly), boron (monthly), chloride (monthly), electrical conductivity (monthly), nitrate plus nitrite as N (monthly), total coliform (weekly), and total dissolved solids (monthly) have been retained from Order R5-2008-00033 to determine compliance with effluent limitations for these parameters.

3. Monitoring data collected over the previous permit term for bromoform, chlorodibromomethane, dichlorobromomethane, diazinon, phosphorus, settleable solids, total chlorine residual, and turbidity did not demonstrate reasonable potential to exceed water quality objectives/criteria. Thus, specific monitoring requirements for these

parameters have not been retained from Order R5-2008-0033. This Order includes monitoring for priority pollutants, which include bromoform, chlorodibromomethane, and dichlorobromomethane.

4. The SIP states that if "*…all reported detection limits of the pollutant in the effluent are greater than or equal to the C [water quality criterion or objective] value, the RWQCB [Regional Water Board] shall establish interim requirements…that require additional monitoring for the pollutant…*" This Order requires annual priority pollutant monitoring.

5. Water Code section 13176(a), states: "*The analysis of any material required by [Water Code sections 13000-16104] shall be performed by a laboratory that has accreditation or certification pursuant to Article 3 (commencing with Section 100825) of Chapter 4 of Part 1 of Division 101 of the Health and Safety Code.*" The State Water Board certifies laboratories through its Environmental Laboratory Accreditation Program (ELAP).

   Water Code section 13176 cannot be interpreted in a manner that would violate federal holding time requirements that apply to NPDES permits pursuant to the CWA. (Water Code sections 13370(c), 13372, 13377.) Section 13176 is inapplicable to NPDES permits to the extent it is inconsistent with CWA requirements. (Water Code section 13372(a)) The holding time requirements are 15 minutes for chlorine residual, dissolved oxygen, and pH, and immediate analysis is required for temperature. (40 CFR 136.3(e), Table II) Due to the location of the Facility, it is both legally and factually impossible for the Discharger to comply with Water Code section 13176 for constituents with short holding times.

**C. Whole Effluent Toxicity Testing Requirements**

1. **Acute Toxicity.** Semi-annual 96-hour bioassay testing is required to demonstrate compliance with the effluent limitations for acute toxicity.

2. **Chronic Toxicity.** Quarterly chronic whole effluent toxicity testing is required in order to demonstrate compliance with the Basin Plan's narrative toxicity objective and this Order's narrative effluent limitation for chronic toxicity.

**D. Receiving Water Monitoring**

**1. Surface Water**

a. Receiving water monitoring is necessary to assess compliance with receiving water limitations and to assess the impacts of the discharge on the receiving stream.

**2. Groundwater**

a. Water Code section 13267 states, in part, *"(a) A regional board, in establishing… waste discharge requirements… may investigate the quality of any waters of the state within its region*" and "*(b) (1) In conducting an investigation…, the regional board may require that any person who… discharges… waste… that could affect the quality of waters within its region shall furnish, under penalty of perjury, technical or monitoring program reports which the regional board requires. The burden, including costs, of these reports shall bear a reasonable relationship to the need for the report and the benefits to be obtained from the reports. In requiring those reports, the regional board shall provide the person with a written explanation with regard to the need for the reports, and shall identify the evidence that supports requiring that person to provide the reports.*" The Monitoring and Reporting Program (Attachment E) is issued pursuant to Water Code section 13267. The groundwater monitoring and reporting program required by this Order and the Monitoring and Reporting Program are necessary to ensure compliance with this Order. The Discharger is responsible for the discharges of waste at the Facility subject to this Order.

b. Monitoring of the groundwater must be conducted to determine the extent to which the discharge has caused an increase in constituent concentrations, when compared to background, and to evaluate whether the discharge has caused exceedances of water quality objectives. The monitoring must, at a minimum, require a complete assessment of groundwater impacts including the vertical and lateral extent of degradation, an assessment of all wastewater-related constituents which may have migrated to groundwater, an analysis of whether additional or different methods of treatment or control of the discharge are necessary to provide best practicable treatment or control to comply with Resolution 68-16. Economic analysis is only one of many factors considered in determining best practicable treatment or control. If monitoring indicates that the discharge has incrementally increased constituent concentrations in groundwater above criteria, this Order may be reopened and modified. Additionally, the groundwater monitoring data will enable the Central Valley Water Board staff to determine if the onsite disposal ponds are subject to or exempt from Title 27 requirements.

c. This Order requires the Discharger to continue groundwater monitoring and includes a regular schedule of groundwater monitoring in the attached Monitoring and Reporting Program. The groundwater monitoring reports are necessary to evaluate impacts to waters of the State to assure protection of beneficial uses and compliance with Central Valley Water Board plans and policies, including Resolution 68-16. Evidence in the record includes effluent monitoring data that indicates the presence of constituents that may degrade groundwater and surface water.

## E. Other Monitoring Requirements

### 1. Biosolids Monitoring

Biosolids monitoring is required to ensure compliance with the biosolids disposal requirements contained in the Special Provision VI.C.5.b of this Order. Biosolids disposal requirements are imposed pursuant to 40 CFR Part 503 to protect public health and prevent groundwater degradation.

### 2. Water Supply Monitoring

Water supply monitoring is required to evaluate the source of constituents in the wastewater, and assess compliance with the electrical conductivity effluent limitations.

### 3. UV Disinfection System Monitoring

UV disinfection system monitoring and reporting are required to ensure that the UV system is operated to adequately inactivate pathogens in the wastewater. UV disinfection system monitoring is imposed to achieve equivalency to requirements established by the CDPH, and the National Water Research Institute (NWRI), and American Water Works Association Research Foundation NWRI/AWWARF's "*Ultraviolet Disinfection Guidelines for Drinking Water and Water Reuse.*"

### 4. Pond Monitoring

Disposal pond monitoring is required to ensure proper operation of the ponds and to identify the potential for nuisance conditions. Daily monitoring for freeboard during periods of discharge, and monitoring of dissolved oxygen have been retained from Order R5-2008-0033.

### 5. Discharge Monitoring Report-Quality Assurance (DMR-QA) Study Program

Under the authority of section 308 of the CWA (33 U.S.C. § 1318), U.S. EPA requires major permittees under the NPDES program to participate in the annual DMR-QA Study Program.

The DMR-QA Study evaluates the analytical ability of laboratories that routinely perform or support self-monitoring analyses required by NPDES permits. There are two options to satisfy the requirements of the DMR-QA Study Program: (1) the Discharger can obtain and analyze a DMR-QA sample as part of the DMR-QA Study; or (2) per the waiver issued by U.S. EPA to the State Water Board, the Discharger can submit the results of the most recent Water Pollution Performance Evaluation Study from their own laboratories or their contract laboratories. A Water Pollution Performance Evaluation Study is similar to the DMR-QA Study. Thus, it also evaluates a laboratory's ability to analyze wastewater samples to produce quality data that ensure the integrity of the NPDES program. The Discharger shall submit annually the results of the DMR-QA Study or the results of the most recent Water Pollution Performance Evaluation Study to the State Water Board. The State Water Board's Quality Assurance Program Officer will send the DMR-QA Study results or the results of the most recent Water Pollution Performance Evaluation Study to U.S. EPA's DMR-QA Coordinator and Quality Assurance Manager.

## VIII. PUBLIC PARTICIPATION

The Central Valley Water Board has considered the issuance of WDRs that will serve as an NPDES permit for the Facility. As a step in the WDR adoption process, the Central Valley Water Board staff has developed tentative WDRs and has encouraged public participation in the WDR adoption process.

### A. Notification of Interested Parties

The Central Valley Water Board notified the Discharger and interested agencies and persons of its intent to prescribe WDRs for the discharge and provided an opportunity to submit written comments and recommendations. Notification was provided through the following <**Describe Notification Process (e.g., newspaper name and date)**>

The public had access to the agenda and any changes in dates and locations through the Central Valley Water Board's website at:
http://www.waterboards.ca.gov/centralvalley/board_decisions/tentative_orders/

### B. Written Comments

Interested persons were invited to submit written comments concerning tentative WDRs as provided through the notification process. Comments were due either in person or by mail to the Executive Office at the Central Valley Water Board at 1685 "E" Street, Fresno, California 93706.

To be fully responded to by staff and considered by the Central Valley Water Board, the written comments were due at the Central Valley Water Board office by 5:00 p.m. on ~~<**Date**>~~27 October 2014.

### C. Public Hearing

The Central Valley Water Board held a public hearing on the tentative WDRs during its regular Board meeting on the following date and time and at the following location:

| | |
|---|---|
| Date: | ~~<~~4/5 December 2014~~>~~ |
| Time: | 8:30 a.m. or 9:00 a.m. |
| Location: | Regional Water Quality Control Board, Central Valley Region<br>11020 Sun Center Dr., Suite #200<br>Rancho Cordova, CA 95670 |

Interested persons were invited to attend. At the public hearing, the Central Valley Water Board heard testimony pertinent to the discharge, WDRs, and permit. For accuracy of the record, important testimony was requested in writing.

### D. Reconsideration of Waste Discharge Requirements

Any aggrieved person may petition the State Water Board to review the decision of the Central Valley Water Board regarding the final WDRs. The petition must be received by the State Water Board at the following address within 30 calendar days of the Central Valley Water Board's action:

State Water Resources Control Board
Office of Chief Counsel
P.O. Box 100, 1001 I Street
Sacramento, CA 95812-0100

For instructions on how to file a petition for review, see
http://www.waterboards.ca.gov/public_notices/petitions/water_quality/wqpetition_instr.shtml

### E. Information and Copying

The Report of Waste Discharge, other supporting documents, and comments received are on file and may be inspected at the address on the cover page at any time between 8:00 a.m. and 4:30 p.m., Monday through Friday, except for State holidays. Copying of documents may be arranged through the Central Valley Water Board by calling (559) 445-5116.

### F. Register of Interested Persons

Any person interested in being placed on the mailing list for information regarding the WDRs and NPDES permit should contact the Central Valley Water Board, reference this Facility, and provide a name, address, and phone number.

### G. Additional Information

Requests for additional information or questions regarding this Order should be directed to Aidé Ortiz at (559) 445-6083.

## ATTACHMENT G – SUMMARY OF REASONABLE POTENTIAL ANALYSIS AT DISCHARGE POINT 001

| Constituent | Units | MEC | B | C | CMC | CCC | Water & Org | Org. Only | Basin Plan | MCL | Reasonable Potential |
|---|---|---|---|---|---|---|---|---|---|---|---|
| Aldrin | µg/L | ND | ND | 0.00013 | 3 | -- | 0.00013 | N/A | -- | -- | No[1] |
| alpha-BHC | µg/L | ND | ND | 0.0039 | -- | -- | 0.0039 | N/A | -- | -- | No[1] |
| alpha-Endosulfan (Endosulfan I) | µg/L | ND | ND | 0.056 | 0.22 | 0.056 | 0.00014 | N/A | -- | -- | No[1] |
| Aluminum, Total Recoverable | µg/L | 330/200[2] | 4600[2] | 200[2] | -- | -- | -- | -- | -- | 200[2,3] | Yes |
| Ammonia (as N), Total | mg/L | 2.6 | 1.2 | 0.21 | 0.47[4] | 0.21[4]/0.54[4,5] | -- | -- | -- | -- | Yes[1] |
| Ammonia (as N), un-ionized | mg/L | 0.018 | 0.020 | 0.025 | -- | -- | -- | -- | 0.025 | -- | Yes[1] |
| Bromoform | µg/L | ND | ND | 4.3 | -- | -- | 4.3 | N/A | -- | -- | No |
| Cadmium, Total Recoverable | µg/L | ND | ND | 0.24/2.2[6] | 0.24/3.1[6] | 0.32/2.2[6] | -- | -- | -- | 5 | No[1] |
| Chlorine Residual, Total | mg/L | ND | ND | 0.011 | 0.019[4] | 0.011[4] | -- | -- | -- | -- | No |
| Chlorodibromomethane | µg/L | ND | ND | 0.41 | -- | -- | 0.41 | N/A | -- | -- | No |
| Copper, Total Recoverable | µg/L | 41 | 22 | 1.0 /8.1[6] | 1.2/12[6] | 1.0/8.1[6] | 1300 | -- | -- | 1000 | Yes |
| Cyanide, Total (as CN) | µg/L | 6.6 | ND | 5.2 | 22 | 5.2 | 700 | N/A | -- | 150 | Yes |
| Dichlorobromomethane | µg/L | ND | ND | 0.56 | -- | -- | 0.56 | N/A | -- | -- | No |
| Fluoride | mg/L | 2.7/2.05[2] | 1.2/0.34[2] | 2.0 | -- | -- | -- | -- | -- | 2.0 | No[1] |
| Heptachlor | µg/L | ND | ND | 0.00021 | 0.52 | 0.0038 | 0.00021 | N/A | -- | 0.01 | No[1] |
| Lead, Total Recoverable | µg/L | ND | ND | 0.12/1.7[6] | 3.0/43[6] | 0.12/1.7[6] | -- | -- | -- | 15 | No[1] |
| Mercury, Total Recoverable | µg/L | 0.0035 | ND | 0.050 | -- | -- | 0.050 | N/A | -- | -- | No[1] |
| Nitrate (as $NO_3$) | mg/L | 89 | 54 | 45 | -- | -- | -- | -- | -- | 45 | Yes |
| Nitrite (as N) | mg/L | 2.6 | ND | 1 | -- | -- | -- | -- | -- | 1 | Yes |
| Selenium, Total Recoverable | µg/L | 2.6 | 2.9 | 5.0 | -- | 5.0 | -- | -- | -- | 50 | No[1] |
| Silver, Total Recoverable | µg/L | ND | ND | 0.046/0.88[6] | 0.046/0.88[6] | -- | -- | -- | -- | 100 | No[1] |
| Thallium, Total Recoverable | µg/L | ND | ND | 1.7 | -- | -- | 1.7 | N/A | -- | 2 | No[1] |
| Total Dissolved Solids | mg/L | 570/524[2] | 54/47[2] | 500 | -- | -- | -- | -- | -- | 500[3] | No[1] |

MEC = Maximum Effluent Concentration
B = Maximum Receiving Water Concentration or lowest detection level, if non-detect
C = Criterion used for Reasonable Potential Analysis
CMC = Criterion Maximum Concentration (CTR or NTR)
CCC = Criterion Continuous Concentration (CTR or NTR)
Water & Org = Human Health Criterion for Consumption of Water & Organisms (CTR or NTR)
Org. Only = Human Health Criterion for Consumption of Organisms Only (CTR or NTR)
Basin Plan = Numeric Site-specific Basin Plan Water Quality Objective
MCL = Drinking Water Standards Maximum Contaminant Level
ND = Non-detect

Footnotes:
(1) See Section IV.C.3 of the Fact Sheet (Attachment F) for detailed discussion
(2) Annual average
(3) Secondary MCL
(4) U.S. EPA National Recommended Ambient Water Quality Criteria
(5) 30-day chronic criterion / 4-day chronic criterion
(6) Receiving water criterion / effluent criterion

## ATTACHMENT H – CALCULATION OF WQBELS

| Parameter | Units | Most Stringent Criteria | | | Dilution Factors | | | HH Calculations | | | Aquatic Life Calculations | | | | | | | | | Final Effluent Limitations | |
|---|---|---|---|---|---|---|---|---|---|---|---|---|---|---|---|---|---|---|---|---|---|
| | | HH | CMC | CCC | HH | CMC | CCC | $ECA_{HH}$ = $AMEL_{HH}$ | AMEL/MDEL $Multiplier_{HH}$ | $MDEL_{HH}$ | ECA $Multiplier_{acute}$ | $LTA_{acute}$ | ECA $Multiplier_{chronic}$ | $LTA_{chronic}$ | Lowest LTA | AMEL $Multiplier_{95}$ | $AMEL_{AL}$ | MDEL $Multiplier_{99}$ | $MDEL_{AL}$ | Lowest AMEL | Lowest MDEL |
| Copper, Total Recoverable | µg/L | 1000 | 12 | 8.1 | -- | -- | -- | -- | -- | -- | 0.37 | 4.5 | 0.58 | 4.7 | 4.5 | 1.4 | 6.5 | 2.7 | 12 | 6.5 | 12 |
| Cyanide, Total (as CN) | µg/L | 150 | 22 | 5.2 | -- | -- | -- | -- | -- | -- | 0.30 | 6.7 | 0.51 | 2.6 | 2.6 | 1.6 | 4.2 | 3.3 | 8.7 | 4.2 | 8.7 |
| Aluminum, Total Recoverable | µg/L | 200[1] | -- | -- | -- | -- | -- | -- | -- | -- | -- | -- | -- | -- | 200[2] | 1.70[2] | 341[2] | 3.80[2] | 761[2] | 341 | 761 |

[1] California Secondary MCL (not based on human health)

[2] The criterion used to calculate the aluminum effluent limitations is not an aquatic life criterion; however, the procedures in the State Implementation Policy for calculating effluent limitations based on aquatic life criteria were generally used for calculating the aluminum effluent limitations (see Section IV.C.3.b.i.(c) of Attachment F – Fact Sheet).

## ATTACHMENT I – REQUIRED REPORTING LEVELS FOR PRIORITY POLLUTANTS

**Table I-1. Required Reporting Levels for Priority Pollutants**

| CTR # | Constituent | CAS Number | Associated Analytical Method Type | Reporting Level (µg/L or noted) |
|---|---|---|---|---|
| 1 | Antimony, Total Recoverable | 7440360 | GFAA | 5 |
| | | | ICPMS | 0.5 |
| | | | SPGFAA | 5 |
| | | | HYDRIDE | 0.5 |
| 2 | Arsenic, Total Recoverable | 7440382 | GFAA | 2 |
| | | | ICP | 10 |
| | | | ICPMS | 2 |
| | | | SPGFAA | 2 |
| | | | HYDRIDE | 1 |
| 3 | Beryllium, Total Recoverable | 7440417 | FAA | 20 |
| | | | GFAA | 0.5 |
| | | | ICP | 2 |
| | | | ICPMS | 0.5 |
| | | | SPGFAA | 1 |
| | | | DCP | 1000 |
| 4 | Cadmium, Total Recoverable | 7440439 | GFAA | 0.5 |
| | | | ICPMS | 0.25 |
| | | | SPGFAA | 0.5 |
| 5a | Chromium (III), Total Recoverable | 16065831 | -- | -- |
| 5b | Chromium (VI), Total Recoverable | 18540299 | FAA | 5 |
| | | | COLOR | 10 |
| 6 | Copper, Total Recoverable | 7440508 | ICPMS | 0.5 |
| 7 | Lead, Total Recoverable | 7439921 | ICPMS | 0.5 |
| 8 | Mercury, Total Recoverable | 7439976 | CVAA | 0.2 |
| 9 | Nickel, Total Recoverable | 7440020 | ICPMS | 1 |
| 10 | Selenium, Total Recoverable | 7782492 | GFAA | 5 |
| | | | ICPMS | 2 |
| | | | SPGFAA | 5 |
| | | | HYDRIDE | 1 |
| 11 | Silver, Total Recoverable | 7440224 | ICPMS | 0.25 |
| 12 | Thallium, Total Recoverable | 7440280 | ICPMS | 1 |
| 13 | Zinc, Total Recoverable | 7440666 | ICPMS | 1 |
| | | | SPGFAA | 10 |
| 14 | Cyanide, Total (as CN) | 57125 | COLOR | 5 |
| 15 | Asbestos (MFL units) | 1332214 | | |
| 16 | 2,3,7,8-TCDD (Dioxin) | 1746016 | | |
| 17 | Acrolein | 107028 | GC | 2.0 |
| | | | GCMS | 5 |
| 18 | Acrylonitrile | 107131 | GC | 2.0 |
| | | | GCMS | 2 |
| 19 | Benzene | 71432 | GC | 0.5 |

| CTR # | Constituent | CAS Number | Associated Analytical Method Type | Reporting Level (µg/L or noted) |
|---|---|---|---|---|
| 20 | Bromoform | 75252 | GC | 0.5 |
| | | | GCMS | 2 |
| 21 | Carbon Tetrachloride | 56235 | GC | 0.5 |
| 22 | Chlorobenzene | 108907 | GC | 0.5 |
| | | | GCMS | 2 |
| 23 | Chlorodibromomethane (Dibromochloromethane) | 124481 | GC | 0.5 |
| 24 | Chloroethane | 75003 | GC | 0.5 |
| | | | GCMS | 2 |
| 25 | 2-Chloroethylvinyl Ether | 110758 | GC | 1 |
| | | | GCMS | 1 |
| 26 | Chloroform | 67663 | GC | 0.5 |
| | | | GCMS | 2 |
| 27 | Dichlorobromomethane (Bromodichloromethane) | 75274 | GC | 0.5 |
| 28 | 1,1-Dichloroethane | 75343 | GC | 0.5 |
| | | | GCMS | 1 |
| 29 | 1,2-Dichloroethane | 107062 | GC | 0.5 |
| 30 | 1,1-Dichloroethylene | 75354 | GC | 0.5 |
| 31 | 1,2-Dichloropropane | 78875 | GC | 0.5 |
| 32 | 1,3-Dichloropropylene | 542756 | GC | 0.5 |
| 33 | Ethylbenzene | 100414 | GC | 0.5 |
| | | | GCMS | 2 |
| 34 | Methyl Bromide (Bromomethane) | 74839 | GC | 1.0 |
| | | | GCMS | 2 |
| 35 | Methyl Chloride (Chloromethane) | 74873 | GC | 0.5 |
| | | | GCMS | 2 |
| 36 | Methylene Chloride (Dichloromethane) | 75092 | GC | 0.5 |
| | | | GCMS | 2 |
| 37 | 1,1,2,2-Tetrachloroethane | 79345 | GC | 0.5 |
| 38 | Tetrachloroethylene | 127184 | GC | 0.5 |
| 39 | Toluene | 108883 | GC | 0.5 |
| | | | GCMS | 2 |
| 40 | Trans-1,2-Dichloroethylene | 156605 | GC | 0.5 |
| | | | GCMS | 1 |
| 41 | 1,1,1-Trichloroethane | 71556 | GC | 0.5 |
| | | | GCMS | 2 |
| 42 | 1,1,2-Trichloroethane | 79005 | GC | 0.5 |
| 43 | Trichloroethylene | 79016 | GC | 0.5 |
| | | | GCMS | 2 |
| 44 | Vinyl Chloride | 75014 | GC | 0.5 |
| 45 | 2-Chlorophenol | 95578 | GC | 2 |
| | | | GCMS | 5 |
| 46 | 2,4-Dichlorophenol | 120832 | GC | 1 |
| | | | GCMS | 5 |

| CTR # | Constituent | CAS Number | Associated Analytical Method Type | Reporting Level (µg/L or noted) |
|---|---|---|---|---|
| 47 | 2,4-Dimethylphenol | 105679 | GC | 1 |
| | | | GCMS | 2 |
| 48 | 2-Methyl-4,6-Dinitrophenol | 534521 | GC | 10 |
| | | | GCMS | 5 |
| 49 | 2,4-Dinitrophenol | 51285 | GC | 5 |
| | | | GCMS | 5 |
| 50 | 2-Nitrophenol | 88755 | GCMS | 10 |
| 51 | 4-Nitrophenol | 100027 | GC | 5 |
| | | | GCMS | 10 |
| 52 | 3-Methyl-4-Chlorophenol | 59507 | GC | 5 |
| | | | GCMS | 1 |
| 53 | Pentachlorophenol | 87865 | GC | 1 |
| 54 | Phenol | 108952 | GC | 1 |
| | | | GCMS | 1 |
| | | | COLOR | 50 |
| 55 | 2,4,6-Trichlorophenol | 88062 | GC | 10 |
| | | | GCMS | 10 |
| 56 | Acenaphthene | 83329 | GC | 1 |
| | | | GCMS | 1 |
| | | | LC | 0.5 |
| 57 | Acenaphthylene | 208968 | GCMS | 10 |
| | | | LC | 0.2 |
| 58 | Anthracene | 120127 | GCMS | 10 |
| | | | LC | 2 |
| 59 | Benzidine | 92875 | GCMS | 5 |
| 60 | Benzo(a)Anthracene | 56553 | GCMS | 5 |
| 61 | Benzo(a)Pyrene | 50328 | LC | 2 |
| 62 | Benzo(b)Fluoranthene | 205992 | GCMS | 10 |
| | | | LC | 10 |
| 63 | Benzo(ghi)Perylene | 191242 | GCMS | 5 |
| | | | LC | 0.1 |
| 64 | Benzo(k)Fluoranthene | 207089 | LC | 2 |
| 65 | Bis(2-Chloroethoxy)Methane | 111911 | GCMS | 5 |
| 66 | Bis(2-Chloroethyl)Ether | 111444 | GCMS | 1 |
| 67 | Bis(2-Chloroisopropyl)Ether | 108601 | GC | 10 |
| | | | GCMS | 2 |
| 68 | Bis(2-Ethylhexyl)Phthalate | 117817 | GCMS | 5 |
| 69 | 4-Bromophenyl Phenyl Ether | 101553 | GC | 10 |
| | | | GCMS | 5 |
| 70 | Butylbenzyl Phthalate | 85687 | GC | 10 |
| | | | GCMS | 10 |
| 71 | 2-Chloronaphthalene | 91587 | GCMS | 10 |
| 72 | 4-Chlorophenyl Phenyl Ether | 7005723 | GCMS | 5 |
| 73 | Chrysene | 218019 | LC | 5 |

| CTR # | Constituent | CAS Number | Associated Analytical Method Type | Reporting Level (µg/L or noted) |
|---|---|---|---|---|
| 74 | Dibenzo(a,h)Anthracene | 53703 | LC | 0.1 |
| 75 | 1,2-Dichlorobenzene | 95501 | GC | 2 |
| | | | GCMS | 2 |
| 76 | 1,3-Dichlorobenzene | 541731 | GC | 2 |
| | | | GCMS | 1 |
| 77 | 1,4-Dichlorobenzene | 106467 | GC | 2 |
| | | | GCMS | 1 |
| 78 | 3,3'-Dichlorobenzidine | 91941 | GCMS | 5 |
| 79 | Diethyl Phthalate | 84662 | GC | 10 |
| | | | GCMS | 2 |
| 80 | Dimethyl Phthalate | 131113 | GC | 10 |
| | | | GCMS | 2 |
| 81 | Di-n-Butyl Phthalate | 84742 | GCMS | 10 |
| 82 | 2,4-Dinitrotoluene | 121142 | GCMS | 5 |
| 83 | 2,6-Dinitrotoluene | 606202 | GCMS | 5 |
| 84 | Di-n-Octyl Phthalate | 117840 | GCMS | 10 |
| 85 | 1,2-Diphenylhydrazine | 122667 | GCMS | 1 |
| 86 | Fluoranthene | 206440 | GC | 10 |
| | | | GCMS | 1 |
| | | | LC | 0.05 |
| 87 | Fluorene | 86737 | GCMS | 10 |
| | | | LC | 0.1 |
| 88 | Hexachlorobenzene | 118741 | GCMS | 1 |
| 89 | Hexachlorobutadiene | 87683 | GCMS | 1 |
| 90 | Hexachlorocyclopentadiene | 77474 | GC | 5 |
| | | | GCMS | 5 |
| 91 | Hexachloroethane | 67721 | GCMS | 1 |
| 92 | Indeno(1,2,3-cd) Pyrene | 193395 | LC | 0.05 |
| 93 | Isophorone | 78591 | GCMS | 1 |
| 94 | Naphthalene | 91203 | GC | 10 |
| | | | GCMS | 1 |
| | | | LC | 0.2 |
| 95 | Nitrobenzene | 98953 | GC | 10 |
| | | | GCMS | 1 |
| 96 | N-Nitrosodimethylamine | 62759 | GCMS | 5 |
| 97 | N-Nitrosodi-n-Propylamine | 621647 | GCMS | 5 |
| 98 | N-Nitrosodiphenylamine | 86306 | GCMS | 1 |
| 99 | Phenanthrene | 85018 | GCMS | 5 |
| | | | LC | 0.05 |
| 100 | Pyrene | 129000 | GCMS | 10 |
| | | | LC | 0.05 |
| 101 | 1,2,4-Trichlorobenzene | 120821 | GC | 1 |
| | | | GCMS | 5 |
| 102 | Aldrin | 309002 | GC | 0.005 |

| CTR # | Constituent | CAS Number | Associated Analytical Method Type | Reporting Level (µg/L or noted) |
|---|---|---|---|---|
| 103 | alpha-BHC | 319846 | GC | 0.01 |
| 104 | beta-BHC | 319857 | GC | 0.005 |
| 105 | gamma-BHC (Lindane) | 58899 | GC | 0.02 |
| 106 | delta-BHC | 319868 | GC | 0.005 |
| 107 | Chlordane | 57749 | GC | 0.1 |
| 108 | 4,4'-DDT | 50293 | GC | 0.01 |
| 109 | 4,4'-DDE | 72559 | GC | 0.05 |
| 110 | 4,4'-DDD | 72548 | GC | 0.05 |
| 111 | Dieldrin | 60571 | GC | 0.01 |
| 112 | alpha-Endosulfan | 959988 | GC | 0.02 |
| 113 | beta-Endosulfan | 33213659 | GC | 0.01 |
| 114 | Endosulfan Sulfate | 1031078 | GC | 0.05 |
| 115 | Endrin | 72208 | GC | 0.01 |
| 116 | Endrin Aldehyde | 7421934 | GC | 0.01 |
| 117 | Heptachlor | 76448 | GC | 0.01 |
| 118 | Heptachlor Epoxide | 1024573 | GC | 0.01 |
| 119 | PCB 1242 | 53469219 | GC | 0.5 |
| 120 | PCB 1254 | 11097691 | GC | 0.5 |
| 121 | PCB 1221 | 11104282 | GC | 0.5 |
| 122 | PCB 1232 | 11141165 | GC | 0.5 |
| 123 | PCB 1248 | 12672296 | GC | 0.5 |
| 124 | PCB 1260 | 11096825 | GC | 0.5 |
| 125 | PCB 1016 | 12674112 | GC | 0.5 |
| 126 | Toxaphene | 8001352 | GC | 0.5 |

GC – Gas Chromatography
GCMS – Gas Chromatography/Mass Spectrometry
HRGCMS – High Resolution Gas Chromatography/Mass Spectrometry (i.e., U.S. EPA 1613, 1624 or 1625)
LC – High Pressure Liquid Chromatography
FAA – Flame Atomic Absorption
GFAA – Graphite Furnace Atomic Absorption
HYDRIDE – Gaseous Hydride Atomic Absoprtion
CVAA – Cold Vapor Atomic Absorption
ICP – Inductively Coupled Plasma
ICPMS – Inductively Coupled Plasma/Mass Spectrometry
SPGFAA – Stabilized Platform Graphite Furnace Atomic Absorption (i.e., U.S. EPA 200.9)
DCP – Direct Current Plasma
COLOR – Colorimetric