CALIFORNIA REGIONAL WATER QUALITY CONTROL BOARD

CENTRAL VALLEY REGION

11020 Sun Center Drive #200, Rancho Cordova, California 95670-6114
Phone (916) 464-3291 • FAX (916) 464-4645
http://www.waterboards.ca.gov/centralvalley

ORDER NO. R5-2009-XXXX
NPDES NO. CA0077950

WASTE DISCHARGE REQUIREMENTS FOR THE
CITY OF WOODLAND
CITY OF WOODLAND WATER POLLUTION CONTROL FACILITY
YOLO COUNTY

The following Discharger is subject to waste discharge requirements as set forth in this Order:

Table 1. Discharger Information

Discharger	City of Woodland
Name of Facility	City of Woodland Water Pollution Control Facility
Facility Address	42929 County Road 24, Woodland, CA, 95776
	Yolo County

The discharge by the City of Woodland from the discharge points identified below is subject to waste discharge requirements as set forth in this Order:

Table 2. Discharge Location

Discharge Point	Effluent Description	Discharge Point Latitude	Discharge Point Longitude	Receiving Water
001	Treated WWTP Effluent	38º, 40', 54" N	-121 º,38',42" W	Tule Canal

Table 3. Administrative Information

This Order was adopted by the Regional Water Quality Control Board on:	~~24 October 2008~~**5 February 2009**
This Order shall become effective on:	~~24 October 2008~~**5 February 2009**
This Order shall expire on:	~~24 October 2013~~**5 February 2014**
The Discharger shall file a Report of Waste Discharge in accordance with title 23, California Code of Regulations, as application for issuance of new waste discharge requirements no later than:	**180 days prior to the Order expiration date**

IT IS HEREBY ORDERED, that Order No. R5-2003-0031-R01 is rescinded upon the effective date of this Order except for enforcement purposes, and, in order to meet the provisions contained in division 7 of the Water Code (commencing with section 13000) and regulations adopted thereunder, and the provisions of the federal Clean Water Act (CWA) and regulations and guidelines adopted thereunder, the Discharger shall comply with the requirements in this Order.

I, PAMELA C. CREEDON, Executive Officer, do hereby certify that this Order with all attachments is a full, true, and correct copy of an Order adopted by the California Regional Water Quality Control Board, Central Valley Region, on ~~XX~~ **5** ~~October~~ **February 200~~8~~9.**

PAMELA C. CREEDON, Executive Officer

Table of Contents

I. Facility Information 3
II. Findings 3
III. Discharge Prohibitions 9
IV. Effluent Limitations and Discharge Specifications 9
A. Effluent Limitations – Discharge Point 001 9
1. Final Effluent Limitations – Discharge Point 001 9
2. Interim Effluent Limitations 10
B. Land Discharge Specifications – Not Applicable 11
C. Reclamation Specifications – Not Applicable 11
V. Receiving Water Limitations 11
A. Surface Water Limitations 11
B. Groundwater Limitations 13
VI. Provisions 13
A. Standard Provisions 13
B. Monitoring and Reporting Program (MRP) Requirements 17
C. Special Provisions 18
1. Reopener Provisions 18
2. Special Studies, Technical Reports and Additional Monitoring Requirements 19
3. Best Management Practices and Pollution Prevention 22
4. Construction, Operation and Maintenance Specifications 23
5. Special Provisions for Municipal Facilities (POTWs Only) 24
6. Other Special Provisions 27
7. Compliance Schedules 28
VII. Compliance Determination 29

List of Tables

Table 1. Discharger Information ..... Cover
Table 2. Discharge Location ..... Cover
Table 3. Administrative Information ..... Cover
Table 4. Facility Information 3
Table 5. Basin Plan Beneficial Uses 5
Table 6. Effluent Limitations 9
Table 7. Interim Effluent Limitations 10

List of Attachments

Attachment A – Definitions A-1
Attachment B – Map B-1
Attachment C – Flow Schematic C-1
Attachment D – Standard Provisions D-1
Attachment E – Monitoring and Reporting Program (MRP) E-1
Attachment F – Fact Sheet F-1

I. FACILITY INFORMATION

The following Discharger is subject to waste discharge requirements as set forth in this Order:

Table 4. Facility Information

Discharger	City of Woodland
Name of Facility	City of Woodland Water Pollution Control Facility
Facility Address	42929 County Road 24
	Woodland, CA, 95776
	Yolo County
Facility Contact, Title, and Phone	Mark Hierholzer, Water Pollution Control Facility (WPCF) Superintendent, (530)-406-5112
Mailing Address	300 First Street, Woodland, CA, 95695
Type of Facility	Publicly Owned Treatment Works
Facility Design Flow	10.4 million gallons per day

II. FINDINGS

The California Regional Water Quality Control Board, Central Valley Region (hereinafter Regional Water Board), finds:

A. Background. The City of Woodland (hereinafter Discharger) is currently discharging pursuant to Order No. CA0077950 and National Pollutant Discharge Elimination System (NPDES) Permit No. R5-2003-0031-R01. The Discharger submitted a Report of Waste Discharge, dated 28 September 2007 and applied for a NPDES permit renewal to discharge up to 10.4 mgd of treated wastewater from City of Woodland Water Pollution Control Facility**,** hereinafter Facility.

For the purposes of this Order, references to the "Discharger" or "permittee" in applicable federal and state laws, regulations, plans, or policy are held to be equivalent to references to the Discharger herein.

B. Facility Description. The Discharger owns and operates a wastewater collection, treatment, and disposal system and provides sewerage service to domestic, commercial, and industrial users of City of Woodland. The treatment system consists of headworks, secondary treatment, tertiary filtration, ultraviolet disinfection, and sludge handling. Wastewater is discharged from Discharge Point 001(see table on cover page) to the Tule Canal, a water of the United States, and a part of the Yolo Bypass within Sacramento Delta Hydrologic Unit. A portion of the wastewater may be diverted and treated in the Facility's pond system. Attachment B provides a map of the area around the Facility. Attachment C provides a flow schematic of the Facility.

C. Legal Authorities. This Order is issued pursuant to section 402 of the federal Clean Water Act (CWA) and implementing regulations adopted by the U.S. Environmental

Protection Agency (USEPA) and chapter 5.5, division 7 of the California Water Code (commencing with section 13370). It shall serve as a NPDES permit for point source discharges from this facility to surface waters. This Order also serves as Waste Discharge Requirements (WDRs) pursuant to article 4, chapter 4, division 7 of the Water Code (commencing with section 13260).

D. **Background and Rationale for Requirements**. The Regional Water Board developed the requirements in this Order based on information submitted as part of the application, through monitoring and reporting programs, and other available information. The Fact Sheet (Attachment F), which contains background information and rationale for Order requirements, is hereby incorporated into this Order and constitutes part of the Findings for this Order. Attachments A through E are also incorporated into this Order.

E. **California Environmental Quality Act (CEQA).** Under Water Code section 13389, this action to adopt an NPDES permit is exempt from the provisions of CEQA, Public Resources Code sections 21100-21177.

F. **Technology-based Effluent Limitations***.* Section 301(b) of the CWA and implementing USEPA permit regulations at section 122.44, title 40 of the Code of Federal Regulations (CFR)[1] require that permits include conditions meeting applicable technology-based requirements at a minimum, and any more stringent effluent limitations necessary to meet applicable water quality standards. This Order includes technology-based effluent limitations based on tertiary treatment or equivalent requirements that meet both the technology-based secondary treatment standards for POTWs and protect the beneficial uses of the receiving waters. A detailed discussion of the technology-based effluent limitations development is included in the Fact Sheet (Attachment F).

G. **Water Quality-based Effluent Limitations.** Section 301(b) of the CWA and section 122.44(d) require that permits include limitations more stringent than applicable federal technology-based requirements where necessary to achieve applicable water quality standards. This Order contains requirements, expressed as a technology equivalence requirement, more stringent than secondary treatment requirements that are necessary to meet applicable water quality standards. The Regional Water Board has considered the factors listed in CWC Section 13241 in establishing these requirements. The rationale for these requirements, which consist of tertiary treatment or equivalent requirements, is discussed in the Fact Sheet.

Section 122.44(d)(1)(i) mandates that permits include effluent limitations for all pollutants that are or may be discharged at levels that have the reasonable potential to cause or contribute to an exceedance of a water quality standard, including numeric and narrative objectives within a standard. Where reasonable potential has been established for a pollutant, but there is no numeric criterion or objective for the pollutant, water quality-based effluent limitations (WQBELs) must be established using: (1) EPA criteria guidance under CWA section 304(a), supplemented where necessary by other

[1] All further statutory references are to title 40 of the Code of Federal Regulations unless otherwise indicated.

relevant information; (2) an indicator parameter for the pollutant of concern; or (3) a calculated numeric water quality criterion, such as a proposed State criterion or policy interpreting the State's narrative criterion, supplemented with other relevant information, as provided in 40 CFR section 122.44(d)(1)(vi).

H. Water Quality Control Plans. The Regional Water Board adopted a *Water Quality Control Plan, Fourth Edition (Revised August 2006), for the Sacramento and San Joaquin River Basins* (hereinafter Basin Plan) that designates beneficial uses, establishes water quality objectives, and contains implementation programs and policies to achieve those objectives for all waters addressed through the plan. Tule Canal is physically part of the Yolo Bypass. Beneficial uses applicable to Tule Canal are as follows:

Table 5. Basin Plan Beneficial Uses

Discharge Point	Receiving Water Name	Beneficial Use(s)
001	Tule Canal	Existing: Agricultural supply (AGR); Contact (REC-1) and non-contact (REC-2) water recreation; Warm freshwater habitat (WARM); Spawning, Reproduction, and /or Early Development (SPWN); Wildlife habitat (WILD); Ground water recharge (GWR); Freshwater replenishment (FRESH). Potential: Cold freshwater habitat (COLD)

Requirements of this Order implement the Basin Plan.

I. National Toxics Rule (NTR) and California Toxics Rule (CTR). USEPA adopted the NTR on December 22, 1992, and later amended it on May 4, 1995 and November 9, 1999. About forty criteria in the NTR applied in California. On May 18, 2000, USEPA adopted the CTR. The CTR promulgated new toxics criteria for California and, in addition, incorporated the previously adopted NTR criteria that were applicable in the state. The CTR was amended on February 13, 2001. These rules contain water quality criteria for priority pollutants.

J. State Implementation Policy. On March 2, 2000, the State Water Board adopted the *Policy for Implementation of Toxics Standards for Inland Surface Waters, Enclosed Bays, and Estuaries of California* (State Implementation Policy or SIP). The SIP became effective on April 28, 2000 with respect to the priority pollutant criteria promulgated for California by the USEPA through the NTR and to the priority pollutant objectives established by the Regional Water Board in the Basin Plan. The SIP became effective on May 18, 2000 with respect to the priority pollutant criteria promulgated by the USEPA through the CTR. The State Water Board adopted amendments to the SIP

on February 24, 2005 that became effective on July 13, 2005. The SIP establishes implementation provisions for priority pollutant criteria and objectives and provisions for chronic toxicity control. Requirements of this Order implement the SIP.

K. Compliance Schedules and Interim Requirements. In general, an NPDES permit must include final effluent limitations that are consistent with Clean Water Act section 301 and with 40 CFR 122.44(d). There are exceptions to this general rule. The State Water Board has concluded that where the Regional Water Board's Basin Plan allows for schedules of compliance and the Regional Water Board is newly interpreting a narrative standard, it may include schedules of compliance in the permit to meet effluent limits that implement a narrative standard. See In the Matter of Waste Discharge Requirements for Avon Refinery (State Board Order WQ 2001-06 at pp. 53-55). See also Communities for a Better Environment et al. v. State Water Resources Control Board, 34 Cal.Rptr.3d 396, 410 (2005). The Basin Plan for the Sacramento and San Joaquin Rivers includes a provision that authorizes the use of compliance schedules in NPDES permits for water quality objectives that are adopted after the date of adoption of the Basin Plan, which was September 25, 1995 (See Basin Plan at page IV-16). Consistent with the State Water Board's Order in the CBE matter, the Regional Water Board has the discretion to include compliance schedules in NPDES permits when it is including an effluent limitation that is a "new interpretation" of a narrative water quality objective. This conclusion is also consistent with the United States Environmental Protection Agency policies and administrative decisions. See, e.g., Whole Effluent Toxicity (WET) Control Policy. The Regional Water Board, however, is not required to include a schedule of compliance, but may issue a Time Schedule Order pursuant to Water Code section 13300 or a Cease and Desist Order pursuant to Water Code section 13301 where it finds that the discharger is violating or threatening to violate the permit. The Regional Water Board will consider the merits of each case in determining whether it is appropriate to include a compliance schedule in a permit, and, consistent with the Basin Plan, should consider feasibility of achieving compliance, and must impose a schedule that is as short as practicable to achieve compliance with the objectives, criteria, or effluent limit based on the objective or criteria.

For CTR constituents, Section 2.1 of the SIP provides that, based on a Discharger's request and demonstration that it is infeasible for an existing Discharger to achieve immediate compliance with an effluent limitation derived from a CTR criterion, compliance schedules may be allowed in an NPDES permit. Unless an exception has been granted under section 5.3 of the SIP, a compliance schedule may not exceed 5 years from the date that the permit is issued or reissued, nor may it extend beyond 10 years from the effective date of the SIP (or May 18, 2010) to establish and comply with CTR criterion-based effluent limitations. Where a compliance schedule for a final effluent limitation that exceeds 1 year, the Order must include interim numeric limitations for that constituent or parameter. Where allowed by the Basin Plan, compliance schedules and interim effluent limitations or discharge specifications may also be granted to allow time to implement a new or revised water quality objective. This Order includes compliance schedules and interim effluent limitations. A detailed discussion of the basis for the compliance schedule(s) and interim effluent limitation(s) and/or discharge specifications is included in the Fact Sheet.

L. Alaska Rule. On March 30, 2000, USEPA revised its regulation that specifies when new and revised state and tribal water quality standards (WQS) become effective for CWA purposes. (40 C.F.R. § 131.21; 65 Fed. Reg. 24641 (April 27, 2000).) Under the revised regulation (also known as the Alaska rule), new and revised standards submitted to USEPA after May 30, 2000, must be approved by USEPA before being used for CWA purposes. The final rule also provides that standards already in effect and submitted to USEPA by May 30, 2000 may be used for CWA purposes, whether or not approved by USEPA.

M. Stringency of Requirements for Individual Pollutants. This Order contains both technology-based and water quality-based effluent limitations for individual pollutants. The technology-based effluent limitations consist of restrictions on BOD_5 and TSS. The water quality-based effluent limitations consist of restrictions on ammonia and selenium. This Order's technology-based pollutant restrictions implement the minimum, applicable federal technology-based requirements. In addition, this Order contains effluent limitations more stringent than the minimum, federal technology-based requirements that are necessary to meet water quality standards. These limitations are more stringent than required by the CWA. Specifically, this Order includes effluent limitations for BOD, TSS, turbidity and pathogens that are more stringent than applicable federal standards, but that are nonetheless necessary to meet numeric objectives or protect beneficial uses. The rationale for including these limitations is explained in the Fact Sheet. In addition, the Regional Water Board has considered the factors in Water Code section 13241 in establishing these requirements.

Water quality-based effluent limitations have been scientifically derived to implement water quality objectives that protect beneficial uses. Both the beneficial uses and the water quality objectives have been approved pursuant to federal law and are the applicable federal water quality standards. To the extent that toxic pollutant water quality-based effluent limitations were derived from the CTR, the CTR is the applicable standard pursuant to 40 CFR section 131.38. The scientific procedures for calculating the individual water quality-based effluent limitations are based on the CTR-SIP, which was approved by USEPA on May 1, 2001. All beneficial uses and water quality objectives contained in the Basin Plan were approved under state law and submitted to and approved by USEPA prior to May 30, 2000. Any water quality objectives and beneficial uses submitted to USEPA prior to May 30, 2000, but not approved by USEPA before that date, are nonetheless "*applicable water quality standards for purposes of the [Clean Water] Act*" pursuant to 40 CFR section 131.21(c)(1). Collectively, this Order's restrictions on individual pollutants are no more stringent than required to implement the technology-based requirements of the CWA and the applicable water quality standards for purposes of the CWA.

N. Antidegradation Policy. Section 131.12 requires that the state water quality standards include an antidegradation policy consistent with the federal policy. The State Water Board established California's antidegradation policy in State Water Board Resolution No. 68-16. Resolution No. 68-16 is consistent with the federal antidegradation policy where the federal policy applies under federal law. Resolution No. 68-16 requires that

existing quality of waters be maintained unless degradation is justified based on specific findings. The Regional Water Board's Basin Plan implements, and incorporates by reference, both the state and federal antidegradation policies. As discussed in detail in the Fact Sheet, the permitted discharge is consistent with the antidegradation provision of section 131.12 and State Water Board Resolution No. 68-16.

O. Anti-Backsliding Requirements. Sections 402(o)(2) and 303(d)(4) of the CWA and federal regulations at title 40, Code of Federal Regulations section 122.44(l) prohibit backsliding in NPDES permits. These anti-backsliding provisions require effluent limitations in a reissued permit to be as stringent as those in the previous permit, with some exceptions where limitations may be relaxed. Some effluent limitations in this Order are less stringent that those in the previous Order. As discussed in detail in the Fact Sheet, this relaxation of effluent limitations is consistent with the anti-backsliding requirements of the CWA and federal regulations.

P. Monitoring and Reporting. Section 122.48 requires that all NPDES permits specify requirements for recording and reporting monitoring results. Water Code sections 13267 and 13383 authorizes the Regional Water Board to require technical and monitoring reports. The Monitoring and Reporting Program establishes monitoring and reporting requirements to implement federal and State requirements. This Monitoring and Reporting Program is provided in Attachment E.

Q. Standard and Special Provisions. Standard Provisions, which apply to all NPDES permits in accordance with section 122.41, and additional conditions applicable to specified categories of permits in accordance with section 122.42, are provided in Attachment D. The discharger must comply with all standard provisions and with those additional conditions that are applicable under section 122.42. The Regional Water Board has also included in this Order special provisions applicable to the Discharger. A rationale for the special provisions contained in this Order is provided in the attached Fact Sheet.

R. Provisions and Requirements Implementing State Law. The provisions/requirements in subsections IV.B, IV.C, V.B, and VI.C. of this Order are included to implement state law only. These provisions/requirements are not required or authorized under the federal CWA; consequently, violations of these provisions/requirements are not subject to the enforcement remedies that are available for NPDES violations.

S. Notification of Interested Parties. The Regional Water Board has notified the Discharger and interested agencies and persons of its intent to prescribe Waste Discharge Requirements for the discharge and has provided them with an opportunity to submit their written comments and recommendations. Details of notification are provided in the Fact Sheet of this Order.

T. Consideration of Public Comment. The Regional Water Board, in a public meeting, heard and considered all comments pertaining to the discharge. Details of the Public Hearing are provided in the Fact Sheet of this Order.

III. DISCHARGE PROHIBITIONS

A. Discharge of wastewater at a location or in a manner different from that described in the Findings is prohibited.

B. The by-pass or overflow of wastes to surface waters is prohibited, except as allowed by Federal Standard Provisions I.G. and I.H. (Attachment D).

C. Neither the discharge nor its treatment shall create a nuisance as defined in Section 13050 of the California Water Code.

D. The Discharger shall not allow pollutant-free wastewater to be discharged into the collection, treatment, and disposal system in amounts that significantly diminish the system's capability to comply with this Order. Pollutant-free wastewater means rainfall, groundwater, cooling waters, and condensates that are essentially free of pollutants.

IV. EFFLUENT LIMITATIONS AND DISCHARGE SPECIFICATIONS

A. Effluent Limitations – Discharge Point 001

1. Final Effluent Limitations – Discharge Point 001

The Discharger shall maintain compliance with the following effluent limitations at Discharge Point 001, with compliance measured at Monitoring Location Eff-001 as described in the attached MRP (Attachment E):

a. The Discharger shall maintain compliance with the effluent limitations specified in Table 6:

Table 6. Effluent Limitations

Parameter	Units	Effluent Limitations				
		Average Monthly	Average Weekly	Maximum Daily	Instantaneous Minimum	Instantaneous Maximum
BOD 5-day @ 20 ° C	mg/L	10	15	20	--	--
	lbs/day[1]	867	1301	1735	--	--
Total Suspended Solids (TSS)	mg/L	10	15	20	--	--
	lbs/day[1]	867	1301	1735	--	--
pH	standard units	--	--	--	6.5	8.5
Ammonia Nitrogen, Total (as N)	mg/L	0.~~6~~8	--	2.~~0~~2	--	--
~~Oil and Grease~~	~~mg/L~~	~~10~~	~~--~~	~~15~~	~~--~~	~~--~~
	~~lbs/day[1]~~	~~867~~	~~--~~	~~1301~~	~~--~~	~~--~~
Selenium	ug/L	3.2	--	9.2	--	--
	lbs/day[1]	0.28	--	0.80	--	--
~~Settable Solids~~	~~mlL/L~~	~~0.1~~	~~--~~	~~0.2~~	~~--~~	~~--~~

1. Based upon a design treatment capacity of 10.4 mgd.

b. **Percent Removal:** The average monthly percent removal of BOD 5-day 20°C and total suspended solids shall not be less than 85 percent.

c. **Mercury.** The total monthly mass discharge of total mercury shall not exceed 0.088 lbs/month.

d. **Acute Whole Effluent Toxicity.** Survival of aquatic organisms in 96-hour bioassays of undiluted waste shall be no less than:

i. 70%, minimum for any one bioassay; and
ii. 90%, median for any three consecutive bioassays.

e. **Chronic Whole Effluent Toxicity**. There shall be no chronic toxicity in the effluent discharge.

f. **Total Coliform Organisms.** Effluent total coliform organisms shall not exceed:

i. 2.2 most probable number (MPN) per 100 mL, as a 7-day median; and
ii. 23 MPN/100 mL, more than once in any 30-day period; and
iii. 240 MPN/100 mL, at any time.

g. **Average Daily Discharge Flow.** The Average Daily Discharge Flow shall not exceed 10.4 mgd.

2. Interim Effluent Limitations

a. During the period beginning on the **Permit Effective Date** and ending **17 May 2010**, the Discharger shall maintain compliance with the following limitations at Discharge Point 001, with compliance measured at Monitoring Location EFF-001 as described in the attached MRP. These interim effluent limitations shall apply in lieu of the corresponding final effluent limitations specified for the same parameters during the time period indicated in this provision.

Table 7. Interim Effluent Limitations

Parameter	Units	Effluent Limitations				
		Average Monthly	Average Weekly	Maximum Daily	Instantaneous Minimum	Instantaneous Maximum
Ammonia[1]	mg/L	--	--	3.7	--	--
Selenium	µg/L	--	--	31	--	--

1 Reported as Total.

b. **Electrical Conductivity.** Beginning the effective date of this Order, the effluent electrical conductivity shall not exceed 1835 umhos/cm as an annual average.

c. **Boron.** Beginning the effective date of this Order, the effluent boron concentration shall not exceed 3.1 mg/L as an annual average.

B. Land Discharge Specifications – Not Applicable

C. Reclamation Specifications – Not Applicable

V. RECEIVING WATER LIMITATIONS

A. Surface Water Limitations

Receiving water limitations are based on water quality objectives contained in the Basin Plan and are a required part of this Order. The discharge shall not cause the following in Tule Canal:

1. **Bacteria**. The fecal coliform concentration, based on a minimum of not less than one sample for any 30-day period, to exceed a geometric mean of 200 MPN/100 mL, nor more than ten percent of the total number of fecal coliform samples taken during any 30-day period to exceed 400 MPN/100 mL.

2. **Biostimulatory Substances**. Water to contain biostimulatory substances which promote aquatic growths in concentrations that cause nuisance or adversely affect beneficial uses.

3. **Chemical Constituents**. Chemical constituents to be present in concentrations that adversely affect beneficial uses.

4. **Color**. Discoloration that causes nuisance or adversely affects beneficial uses.

5. **Dissolved Oxygen**:

   a. The monthly median of the mean daily dissolved oxygen concentration to fall below 85 percent of saturation in the main water mass;
   b. The 95 percentile dissolved oxygen concentration to fall below 75 percent of saturation; nor
   c. The dissolved oxygen concentration to be reduced below 7.0 mg/L at any time.

6. **Floating Material**. Floating material to be present in amounts that cause nuisance or adversely affect beneficial uses.

7. **Oil and Grease**. Oils, greases, waxes, or other materials to be present in concentrations that cause nuisance, result in a visible film or coating on the surface of the water or on objects in the water, or otherwise adversely affect beneficial uses.

8. **pH**. The pH to be depressed below 6.5, raised above 8.5, nor changed by more than 0.5 units. A 1-month averaging period may be applied when calculating the pH change of <0.5 units.

9. **Pesticides**:

   a. Pesticides to be present, individually or in combination, in concentrations that adversely affect beneficial uses;
   b. Pesticides to be present in bottom sediments or aquatic life in concentrations that adversely affect beneficial uses;
   c. Total identifiable persistent chlorinated hydrocarbon pesticides to be present in the water column at concentrations detectable within the accuracy of analytical methods approved by USEPA or the Executive Officer.
   d. Pesticide concentrations to exceed those allowable by applicable antidegradation policies (see State Water Board Resolution No. 68-16 and 40 CFR §131.12.).
   e. Pesticide concentrations to exceed the lowest levels technically and economically achievable.
   f. Pesticides to be present in concentration in excess of the maximum contaminant levels set forth in California Code of Regulations, Title 22, Division 4, Chapter 15.
   g. Thiobencarb to be present in excess of 1.0 µg/L.

10. **Radioactivity**:

   a. Radionuclides to be present in concentrations that are harmful to human, plant, animal, or aquatic life nor that result in the accumulation of radionuclides in the food web to an extent that presents a hazard to human, plant, animal, or aquatic life.

~~b.Radionuclides to be present in excess of the maximum contaminant levels specified in Table 4 (MCL Radioactivity) of Section 64443 of Title 22 of the California Code of Regulations.~~

11. **Suspended Sediments**. The suspended sediment load and suspended sediment discharge rate of surface waters to be altered in such a manner as to cause nuisance or adversely affect beneficial uses.

12. **Settleable Substances**. Substances to be present in concentrations that result in the deposition of material that causes nuisance or adversely affects beneficial uses.

13. **Suspended Material**. Suspended material to be present in concentrations that cause nuisance or adversely affect beneficial uses.

14. **Taste and Odors**. Taste- or odor-producing substances to be present in concentrations that impart undesirable tastes or odors to fish flesh or other edible products of aquatic origin, or that cause nuisance, or otherwise adversely affect beneficial uses**.**

15. **Temperature**. The natural temperature to be increased by more than 5°F.

16. **Toxicity**. Toxic substances to be present, individually or in combination, in concentrations that produce detrimental physiological responses in human, plant, animal, or aquatic life.

17. **Turbidity**. The turbidity to increase as follows:

    a. More than 1 Nephelometric Turbidity Unit (NTU) where natural turbidity is between 0 and 5 NTUs.
    b. More than 20 percent where natural turbidity is between 5 and 50 NTUs.
    c. More than 10 NTU where natural turbidity is between 50 and 100 NTUs.
    d. More than 10 percent where natural turbidity is greater than 100 NTUs.

B. Groundwater Limitations

Release of waste constituents from any storage, treatment, or disposal component associated with the WWTP, in combination with other sources, shall not cause the underlying groundwater to contain waste constituents in concentrations greater than background water quality.

VI. PROVISIONS

A. Standard Provisions

1. The Discharger shall comply with all Standard Provisions included in Attachment D of this Order.

2. The Discharger shall comply with the following provisions:

    a. If the Discharger's wastewater treatment plant is publicly owned or subject to regulation by California Public Utilities Commission, it shall be supervised and operated by persons possessing certificates of appropriate grade according to Title 23, CCR, Division 3, Chapter 26.

    b. After notice and opportunity for a hearing, this Order may be terminated or modified for cause, including, but not limited to:

        i. violation of any term or condition contained in this Order;

        ii. obtaining this Order by misrepresentation or by failing to disclose fully all relevant facts;

        iii. a change in any condition that requires either a temporary or permanent reduction or elimination of the authorized discharge; and

        iv. a material change in the character, location, or volume of discharge.

The causes for modification include:

- *New regulations.* New regulations have been promulgated under Section 405(d) of the Clean Water Act, or the standards or regulations on which the permit was based have been changed by promulgation of amended standards or regulations or by judicial decision after the permit was issued.

- *Land application plans.* When required by a permit condition to incorporate a land application plan for beneficial reuse of sewage sludge, to revise an existing land application plan, or to add a land application plan.

- *Change in sludge use or disposal practice.* Under 40 Code of Federal Regulations (CFR) 122.62(a)(1), a change in the Discharger's sludge use or disposal practice is a cause for modification of the permit. It is cause for revocation and reissuance if the Discharger requests or agrees.

The Regional Water Board may review and revise this Order at any time upon application of any affected person or the Regional Water Board's own motion.

c. If a toxic effluent standard or prohibition (including any scheduled compliance specified in such effluent standard or prohibition) is established under Section 307(a) of the CWA, or amendments thereto, for a toxic pollutant that is present in the discharge authorized herein, and such standard or prohibition is more stringent than any limitation upon such pollutant in this Order, the Regional Water Board will revise or modify this Order in accordance with such toxic effluent standard or prohibition.

   The Discharger shall comply with effluent standards and prohibitions within the time provided in the regulations that establish those standards or prohibitions, even if this Order has not yet been modified.

d. This Order shall be modified, or alternately revoked and reissued, to comply with any applicable effluent standard or limitation issued or approved under Sections 301(b)(2)(C) and (D), 304(b)(2), and 307(a)(2) of the CWA, if the effluent standard or limitation so issued or approved:

   i. contains different conditions or is otherwise more stringent than any effluent limitation in the Order; or

   ii. controls any pollutant limited in the Order.

   The Order, as modified or reissued under this paragraph, shall also contain any other requirements of the CWA then applicable.

e. The provisions of this Order are severable. If any provision of this Order is found invalid, the remainder of this Order shall not be affected.

f. The Discharger shall take all reasonable steps to minimize any adverse effects to waters of the State or users of those waters resulting from any discharge or sludge use or disposal in violation of this Order. Reasonable steps shall include such accelerated or additional monitoring as necessary to determine the nature and impact of the non-complying discharge or sludge use or disposal.

g. The Discharger shall ensure compliance with any existing or future pretreatment standard promulgated by USEPA under Section 307 of the CWA, or amendment thereto, for any discharge to the municipal system.

h. The discharge of any radiological, chemical or biological warfare agent or high-level, radiological waste is prohibited.

i. A copy of this Order shall be maintained at the discharge facility and be available at all times to operating personnel. Key operating personnel shall be familiar with its content.

j. Safeguard to electric power failure:

    i. The Discharger shall provide safeguards to assure that, should there be reduction, loss, or failure of electric power, the discharge shall comply with the terms and conditions of this Order.

    ii. Upon written request by the Regional Water Board the Discharger shall submit a written description of safeguards. Such safeguards may include alternate power sources, standby generators, retention capacity, operating procedures, or other means. A description of the safeguards provided shall include an analysis of the frequency, duration, and impact of power failures experienced over the past five years on effluent quality and on the capability of the Discharger to comply with the terms and conditions of the Order. The adequacy of the safeguards is subject to the approval of the Regional Water Board.

    iii. Should the treatment works not include safeguards against reduction, loss, or failure of electric power, or should the Regional Water Board not approve the existing safeguards, the Discharger shall, within ninety days of having been advised in writing by the Regional Water Board that the existing safeguards are inadequate, provide to the Regional Water Board and USEPA a schedule of compliance for providing safeguards such that in the event of reduction, loss, or failure of electric power, the Discharger shall comply with the terms and conditions of this Order. The schedule of compliance shall, upon approval of the Regional Water Board, become a condition of this Order.

k. The Discharger, upon written request of the Regional Water Board, shall file with the Board a technical report on its preventive (failsafe) and contingency (cleanup) plans for controlling accidental discharges, and for minimizing the effect of such events. This report may be combined with that required under Regional Water Board Standard Provision VI.A.2.m.

The technical report shall:

i. Identify the possible sources of spills, leaks, untreated waste by-pass, and contaminated drainage. Loading and storage areas, power outage, waste treatment unit outage, and failure of process equipment, tanks and pipes should be considered.

ii. Evaluate the effectiveness of present facilities and procedures and state when they became operational.

iii. Predict the effectiveness of the proposed facilities and procedures and provide an implementation schedule containing interim and final dates when they will be constructed, implemented, or operational.

The Regional Water Board, after review of the technical report, may establish conditions which it deems necessary to control accidental discharges and to minimize the effects of such events. Such conditions shall be incorporated as part of this Order, upon notice to the Discharger.

l. A publicly owned treatment works (POTW) whose waste flow has been increasing, or is projected to increase, shall estimate when flows will reach hydraulic and treatment capacities of its treatment and disposal facilities. The projections shall be made in January, based on the last three years' average dry weather flows, peak wet weather flows and total annual flows, as appropriate. When any projection shows that capacity of any part of the facilities may be exceeded in four years, the Discharger shall notify the Regional Water Board by 31 January. A copy of the notification shall be sent to appropriate local elected officials, local permitting agencies and the press. Within 120 days of the notification, the Discharger shall submit a technical report showing how it will prevent flow volumes from exceeding capacity or how it will increase capacity to handle the larger flows. The Regional Water Board may extend the time for submitting the report.

m. The Discharger shall submit technical reports as directed by the Executive Officer. All technical reports required herein that involve planning, investigation, evaluation, or design, or other work requiring interpretation and proper application of engineering or geologic sciences, shall be prepared by or under the direction of persons registered to practice in California pursuant to California Business and Professions Code, sections 6735, 7835, and 7835.1. To demonstrate compliance with Title 16, CCR, sections 415 and 3065, all technical reports must contain a statement of the qualifications of the responsible registered professional(s). As required by these laws, completed technical reports must bear the signature(s) and seal(s) of the registered professional(s) in a manner such that all work can be clearly attributed to the professional responsible for the work.

n. Laboratories that perform sample analyses must be identified in all monitoring reports submitted to the Regional Water Board and USEPA.

o. The Discharger shall conduct analysis on any sample provided by USEPA as part of the Discharge Monitoring Quality Assurance (DMQA) program. The results of any such analysis shall be submitted to USEPA's DMQA manager.

p. Effluent samples shall be taken downstream of the last addition of wastes to the treatment or discharge works where a representative sample may be obtained prior to mixing with the receiving waters. Samples shall be collected at such a point and in such a manner to ensure a representative sample of the discharge.

q. All monitoring and analysis instruments and devices used by the Discharger to fulfill the prescribed monitoring program shall be properly maintained and calibrated as necessary, at least yearly, to ensure their continued accuracy.

r. The Discharger shall file with the Regional Water Board technical reports on self-monitoring performed according to the detailed specifications contained in the Monitoring and Reporting Program attached to this Order.

s. The results of all monitoring required by this Order shall be reported to the Regional Water Board, and shall be submitted in such a format as to allow direct comparison with the limitations and requirements of this Order. Unless otherwise specified, discharge flows shall be reported in terms of the monthly average and the daily maximum discharge flows.

t. The Regional Water Board is authorized to enforce the terms of this permit under several provisions of the CWC, including, but not limited to, sections 13385, 13386, and 13387.

u. For POTWs, prior to making any change in the point of discharge, place of use, or purpose of use of treated wastewater that results in a decrease of flow in any portion of a watercourse, the Discharger must file a petition with the State Water Board, Division of Water Rights, and receive approval for such a change. (CWC section 1211).

v. In the event the Discharger does not comply or will be unable to comply for any reason, with any prohibition, maximum daily effluent limitation, 1-hour average effluent limitation, or receiving water limitation contained in this Order, the Discharger shall notify the Regional Water Board by telephone (916) 464-3291 within 24 hours of having knowledge of such noncompliance, and shall confirm this notification in writing within five days, unless the Regional Water Board waives confirmation. The written notification shall include the information required by Attachment D, Section V.E.1 [40 CFR section 122.41(l)(6)(i)].

B. Monitoring and Reporting Program (MRP) Requirements

1. The Discharger shall comply with the MRP, and future revisions thereto, in Attachment E of this Order.

C. Special Provisions

1. Reopener Provisions

a. This Order may be reopened for modification, or revocation and reissuance, as a result of the detection of a reportable priority pollutant generated by special conditions included in this Order. These special conditions may be, but are not limited to, fish tissue sampling, whole effluent toxicity, monitoring requirements on internal waste stream(s), and monitoring for surrogate parameters. Additional requirements may be included in this Order as a result of the special condition monitoring data.

b. Conditions that necessitate a major modification of a permit are described in 40 CFR section 122.62, including:

   i. If new or amended applicable water quality standards are promulgated or approved pursuant to Section 303 of the CWA, or amendments thereto, this permit may be reopened and modified in accordance with the new or amended standards.

   ii. When new information, that was not available at the time of permit issuance, would have justified different permit conditions at the time of issuance.

c. **Mercury.** If mercury is found to be causing toxicity based on acute or chronic toxicity test results, or if a TMDL program is adopted, this Order shall be reopened and the ~~interim~~ mass effluent limitation modified (higher or lower) or an effluent concentration limitation imposed. If the Regional Water Board determines that a mercury offset program is feasible for Dischargers subject to a NPDES permit, then this Order may be reopened to reevaluate the interim mercury mass loading limitation(s) and the need for a mercury offset program for the Discharger.

d. **Pollution Prevention.** This Order requires the Discharger prepare pollution prevention plans following CWC section 13263.3(d)(3) for ammonia and selenium. Based on a review of the pollution prevention plans, this Order may be reopened for addition and/or modification of effluent limitations and requirements for these constituents.

e. **Salinity Evaluation and Minimization Plan.** The Discharger completed a Salinity Control Plan in May 2005 which evaluated the salinity sources in the wastewater. The Discharger shall complete an update to this report to address sources of salinity and recommended minimization strategies.~~.~~ The plan shall be completed and submitted to the Regional Water Board **within 1 year of the adoption date of this Order** for the approval by the Executive Officer.

f. **Whole Effluent Toxicity.** As a result of a Toxicity Reduction Evaluation (TRE), this Order may be reopened to include a chronic toxicity limitation, a new acute toxicity limitation, and/or a limitation for a specific toxicant identified in the TRE. Additionally, if the State Water Board revises the SIP's toxicity control provisions that would require the establishment of numeric chronic toxicity effluent limitations, this Order may be reopened to include a numeric chronic toxicity effluent limitation based on the new provisions.

2. Special Studies, Technical Reports and Additional Monitoring Requirements

a. **Chronic Whole Effluent Toxicity.** For compliance with the Basin Plan's narrative toxicity objective, this Order requires the Discharger to conduct chronic whole effluent toxicity testing, as specified in the Monitoring and Reporting Program (Attachment E, Section V.). Furthermore, this Provision requires the Discharger to investigate the causes of, and identify corrective actions to reduce or eliminate effluent toxicity. If the discharge exceeds the toxicity numeric monitoring trigger established in this Provision, the Discharger is required to initiate a Toxicity Reduction Evaluation (TRE), in accordance with an approved TRE Work Plan, and take actions to mitigate the impact of the discharge and prevent reoccurrence of toxicity. A TRE is a site-specific study conducted in a stepwise process to identify the source(s) of toxicity and the effective control measures for effluent toxicity. TREs are designed to identify the causative agents and sources of whole effluent toxicity, evaluate the effectiveness of the toxicity control options, and confirm the reduction in effluent toxicity. This Provision includes requirements for the Discharger to develop and submit a TRE Work Plan and includes procedures for accelerated chronic toxicity monitoring and TRE initiation.

i. **Initial Investigative Toxicity Reduction Evaluation (TRE) Work Plan. Within 90 days of the effective date of this Order,** the Discharger shall submit to the Regional Water Board an Initial Investigative TRE Work Plan for approval by the Executive Officer. This should be a one to two page document including, at minimum:

a) A description of the investigation and evaluation techniques that will be used to identify potential causes and sources of effluent toxicity, effluent variability, and treatment system efficiency;

b) A description of the facility's methods of maximizing in-house treatment efficiency and good housekeeping practices, and a list of all chemicals used in operation of the facility; and

c) A discussion of who will conduct the Toxicity Identification Evaluation, if necessary (i.e. an in-house expert or outside contractor).

ii. **Accelerated Monitoring and TRE Initiation.** When the numeric toxicity monitoring trigger is exceeded during regular chronic toxicity monitoring, and the testing meets all test acceptability criteria, the Discharger shall initiate

accelerated monitoring as required in the Accelerated Monitoring Specifications. WET testing results exceeding the monitoring trigger during accelerated monitoring demonstrates a pattern of toxicity and requires the Discharger to initiate a TRE to address the effluent toxicity.

iii. **Numeric Monitoring Trigger.** The numeric toxicity monitoring trigger is > **1 TUc** (where TUc = 100/NOEC). The monitoring trigger is not an effluent limitation; it is the toxicity threshold at which the Discharger is required to begin accelerated monitoring and initiate a TRE.

iv. **Accelerated Monitoring Specifications.** If the monitoring trigger is exceeded during regular chronic toxicity testing, within 14-days of notification by the laboratory of the test results, the Discharger shall initiate accelerated monitoring. Accelerated monitoring shall consist of four (4) chronic toxicity tests in a six-week period (i.e. one test every two weeks) using the species that exhibited toxicity. The following protocol shall be used for accelerated monitoring and TRE initiation:

a) If the results of four (4) consecutive accelerated monitoring tests do not exceed the monitoring trigger, the Discharger may cease accelerated monitoring and resume regular chronic toxicity monitoring. However, notwithstanding the accelerated monitoring results, if there is adequate evidence of a pattern of effluent toxicity, the Executive Officer may require that the Discharger initiate a TRE.

b) If the source(s) of the toxicity is easily identified (i.e. temporary plant upset), the Discharger shall make necessary corrections to the facility and shall continue accelerated monitoring until four (4) consecutive accelerated tests do not exceed the monitoring trigger. Upon confirmation that the effluent toxicity has been removed, the Discharger may cease accelerated monitoring and resume regular chronic toxicity monitoring.

c) If the result of any accelerated toxicity test exceeds the monitoring trigger, the Discharger shall cease accelerated monitoring and initiate a TRE to investigate the cause(s) of, and identify corrective actions to reduce or eliminate effluent toxicity. Within thirty (30) days of notification by the laboratory of the test results exceeding the monitoring trigger during accelerated monitoring, the Discharger shall submit a TRE Action Plan to the Regional Water Board including, at minimum:

1) Specific actions the Discharger will take to investigate and identify the cause(s) of toxicity, including TRE WET monitoring schedule;

2) Specific actions the Discharger will take to mitigate the impact of the discharge and prevent the recurrence of toxicity; and

3) A schedule for these actions.

Within sixty (60) days of notification by the laboratory of the test results, the Discharger shall submit to the Regional Water Board a TRE Work Plan for approval by the Executive Officer. The TRE Work Plan shall outline the procedures for identifying the source(s) of, and reducing or eliminating effluent toxicity. The TRE Work Plan must be developed in accordance with EPA guidance[2].

b. **Improvements to Potable Water Supply.** The Discharger shall provide updates to the Regional Water Board as to the progress of improving the City of Woodland's potable water supply. In previous studies, the City determined that improving the potable water supply was the most appropriate and cost-effective means to reduce the effluent levels of electrical conductivity, boron, selenium, and mercury. The Discharger shall comply with the Annual Operations Reporting schedule (shown below) in providing the Regional Water Board with the status of the potable water supply improvement project.

If no discernable progress is being made by the City of Woodland, the Regional Water Board may reopen the permit, as necessary, to include appropriate effluent limitations for these constituents.

Potable Water Supply Improvement Project

Task	Compliance Dates
Submit Progress Report within the Annual Operations Report	30 January each year for the duration of this Order

c. **Groundwater Monitoring.** The Discharger has expanded the existing groundwater monitoring network. All monitoring wells comply with the appropriate standards as described in California Well Standards Bulletin 74-90 (June 1991) and Water Well Standards: State of California Bulletin 74-81 (December 1981), and any more stringent standards adopted by the Discharger or County pursuant to CWC section 13801.

The Discharger has completed five quarters of monitoring to characterize natural background quality of local groundwater in the vicinity of the WPCF pond system. This report, City of Woodland Hydrogeologic Evaluation Report, July 2008 ECO:LOGIC Engineering, was a requirement of the previous permit and was submitted to the Regional Water Board in August 2008.

For each groundwater monitoring parameter/constituent identified in the Monitoring and Reporting Program (Attachment E, Section VIII.B.), the report presents a summary of monitoring data, calculation of the concentration in background monitoring wells, and a comparison of background groundwater quality to that in wells used to monitor the facility. Determination of background quality was made using the methods described in Title 27 California Code of

[2] See Attachment F (Fact Sheet) Section VII.B.2.a. for a list of EPA guidance documents that must be considered in development of the TRE Workplan.

Regulations Section 20415(e)(10), and was based on quarterly data from January 2007 until March 2008. For each monitoring parameter/constituent, the report compares measured concentrations for compliance monitoring wells with the calculated background concentration.

The study assessed groundwater quality at both background and compliance locations. Water quality goals were exceeded for conductivity, total dissolved solids, boron, and sodium, at all monitored locations, iron at Monitoring Well 12 (MW-12), manganese at MW-5, MW-6, MW-9, MW-11, MW-14, and MW-15; chloride at MW-1, MW-2, MW-3, MW-4, MW-5, MW-6, MW-7, MW-10, MW-11, and MW-15; sulfate at MW-15; and, nitrate-N at MW-4.

The statistical analysis was conducted to determine if the presences of evaporated effluent at these locations was resulting in higher solute concentrations, compared to background values and/or water quality objectives. Based on this analysis it was found that all of the downgradient wells (MW-2, MW-3, MW-5, MW-6, MW-7, MW-11) contained salts at higher concentrations than background, and at statistically significant levels. In addition to general mineral chemistry, pathogen mobility was also assessed via analysis of virus. It was found that none of the groundwater monitoring wells contained virus at detectable limits, indicating that pathogen mobility in groundwater is low, in contrast to assessed surface water samples.

The Discharger shall submit a technical report which assesses the WPCF and potable water system components with respect to BPTC and minimizes the WPCF's impact on groundwater quality.

3. Best Management Practices and Pollution Prevention

a. **Pollution Prevention Plan for Ammonia and Selenium**. The Discharger shall prepare and implement a pollution prevention plan for selenium and ammonia in accordance with CWC section 13263.3(d)(3). The minimum requirements for the pollution prevention plan are outlined in the Fact Sheet, Attachment F, section VII.B.3.c. A work plan and time schedule for preparation of the pollution prevention plan shall be completed and submitted **within 6 months of the effective date of this Order** for approval by the Executive Officer. The Pollution Prevention Plan shall be completed and submitted to the Regional Water Board **within** one~~two~~ **(~~2~~1) year~~s~~ following work plan approval by the Executive Officer**, and progress reports shall be submitted in accordance with the Monitoring and Reporting Program (Attachment E, Section X.D.1.).

b. **Salinity Evaluation and Minimization Plan.** The Discharger completed a Salinity Control Plan in May 2005 which evaluated the salinity sources in the wastewater. The Discharger shall complete an update to this report to address sources of salinity and recommended minimization strategies. The plan shall be completed and submitted to the Regional Water Board within **1 year of the adoption date of this Order** for the approval by the Executive Officer.~~.~~

4. Construction, Operation and Maintenance Specifications

a. Ultraviolet Disinfection (UV) System

The Discharger shall operate the UV disinfection system to provide a minimum UV dose per bank of 100 millijoules per square centimeter (mJ/cm^2) at peak daily flow, unless otherwise approved by the California Department of Public Health, and shall maintain an adequate dose for disinfection while discharging to Tule Canal, unless otherwise approved by the California Department of Public Health.

- The Discharger shall provide continuous, reliable monitoring of flow, UV transmittance, UV power, and turbidity.

- The Discharger shall operate the treatment system to insure that turbidity prior to disinfection shall not exceed 2~~.2~~ NTU as a daily average, and 5 NTU more than 5% of the time within a 24-hour period, and 10 NTU, at any time.

- The UV transmittance (at 254 nanometers) in the wastewater exiting the UV disinfection system shall not fall below 55 percent of maximum at any time.

- The quartz sleeves and cleaning system components must be visually inspected per the manufacturer's operations manual for physical wear (scoring, solarization, seal leaks, cleaning fluid levels, etc.) and to check the efficacy of the cleaning system.

- The lamp sleeves must be cleaned periodically as necessary to meet the requirements.

- Lamps must be replaced per the manufacturer's operations manual, or sooner, if there are indications the lamps are failing to provide adequate disinfection. Lamp age and lamp replacement records must be maintained.

- The facility must be operated in accordance with an operations and maintenance program that assures adequate disinfection.

b. Treatment Pond Operating Requirements.

i. The treatment facilities shall be designed, constructed, operated, and maintained to prevent inundation or washout due to floods with a 100-year return frequency.

ii. Public contact with wastewater shall be precluded through such means as fences, signs, and other acceptable alternatives.

iii. Ponds shall be managed to prevent breeding of mosquitoes. In particular,

a) An erosion control program should assure that small coves and irregularities are not created around the perimeter of the water surface.
b) Weeds shall be minimized.
c) Dead algae, vegetation, and debris shall not accumulate on the water surface.

iv. Freeboard in the ~~emergency storage~~ ponds shall not be less than two feet (measured vertically to the lowest point of overflow), except if lesser freeboard does not threaten the integrity of the pond, no overflow of the pond occurs, and lesser freeboard is due to direct precipitation or storm water runoff occurring as a result of annual precipitation with greater than a 100-year recurrence interval, or a storm event with an intensity greater than a 25-year, 24-hour storm event.

v. Ponds shall have sufficient capacity to accommodate allowable wastewater flow and design seasonal precipitation and ancillary inflow and infiltration during the non-irrigation season. Design seasonal precipitation shall be based on total annual precipitation using a return period of 100 years, distributed monthly in accordance with historical rainfall patterns. Freeboard shall never be less than two feet (measured vertically to the lowest point of overflow).

vi. Prior to the onset of the rainy season of each year, available pond storage capacity shall at least equal the volume necessary to comply with Land Discharge Specification v.

5. Special Provisions for Municipal Facilities (POTWs Only)

a. **Pretreatment Requirements.**

i. The Discharger shall implement its approved pretreatment program and the program shall be an enforceable condition of this Order. If the Discharger fails to perform the pretreatment functions, the Regional Water Board, the State Water Board or the U.S. Environmental Protection Agency (U.S. EPA) may take enforcement actions against the Discharger as authorized by the CWA.

ii. The Discharger shall enforce the Pretreatment Standards promulgated under sections 307(b), 307(c), and 307(d) of the Clean Water Act. The Discharger shall perform the pretreatment functions required by 40 CFR Part 403 including, but not limited to:

a) Adopting the legal authority required by 40 CFR 403.8(f)(1);

b) Enforcing the Pretreatment Standards of 40 CFR 403.5 and 403.6;

c) Implementing procedures to ensure compliance as required by 40 CFR 403.8(f)(2); and

d) Providing funding and personnel for implementation and enforcement of the pretreatment program as required by 40 CFR 403.8(f)(3).

iii. The Discharger shall implement, as more completely set forth in 40 CFR 403.5, the necessary legal authorities, programs, and controls to ensure that the following incompatible wastes are not introduced to the treatment system, where incompatible wastes are:

a) Wastes which create a fire or explosion hazard in the treatment works;

b) Wastes which will cause corrosive structural damage to treatment works, but in no case wastes with a pH lower than 5.0, unless the works is specially designed to accommodate such wastes;

c) Solid or viscous wastes in amounts which cause obstruction to flow in sewers, or which cause other interference with proper operation or treatment works;

d) Any waste, including oxygen demanding pollutants (BOD, *etc*.), released in such volume or strength as to cause inhibition or disruption in the treatment works, and subsequent treatment process upset and loss of treatment efficiency;

e) Heat in amounts that inhibit or disrupt biological activity in the treatment works, or that raise influent temperatures above 40°C (104°F), unless the Regional Water Board approves alternate temperature limits;

f) Petroleum oil, non-biodegradable cutting oil, or products of mineral oil origin in amounts that will cause interference or pass through;

g) Pollutants which result in the presence of toxic gases, vapors, or fumes within the treatment works in a quantity that may cause acute worker health and safety problems; and:

h) Any trucked or hauled pollutants, except at points predesignated by the Discharger.

iv. The Discharger shall implement, as more completely set forth in 40 CFR 403.5, the legal authorities, programs, and controls necessary to ensure that indirect discharges do not introduce pollutants into the sewerage system that, either alone or in conjunction with a discharge or discharges from other sources:

a) Flow through the system to the receiving water in quantities or concentrations that cause a violation of this Order, or:

b) Inhibit or disrupt treatment processes, treatment system operations, or sludge processes, use, or disposal and either cause a violation of this Order or prevent sludge use or disposal in accordance with this Order.

b. **Sludge/Biosolids Discharge Specifications**

i. Collected screenings, residual sludge, biosolids, and other solids removed from liquid wastes shall be disposed of in a manner approved by the Executive Officer, and consistent with *Consolidated Regulations for Treatment, Storage, Processing, or Disposal of Solid Waste,* as set forth in Title 27, CCR, Division 2, Subdivision 1, section 20005, et seq. Removal for further treatment, disposal, or reuse at sites (i.e., landfill, composting sites, soil amendment sites) that are operated in accordance with valid waste discharge requirements issued by a regional water quality control board will satisfy these specifications.

ii. Sludge and solid waste shall be removed from screens, sumps, ponds, clarifiers, etc. as needed to ensure optimal plant performance.

iii. The treatment of sludge generated at the Facility shall be confined to the Facility property and conducted in a manner that precludes infiltration of waste constituents into soils in a mass or concentration that will violate Groundwater Limitations V.B. In addition, the storage of residual sludge, solid waste, and biosolids on Facility property shall be temporary and controlled, and contained in a manner that minimizes leachate formation and precludes infiltration of waste constituents into soils in a mass or concentration that will violate Groundwater Limitations V.B.

iv. The use and disposal of biosolids shall comply with existing Federal and State laws and regulations, including permitting requirements and technical standards included in 40 CFR 503. If the State Water Board and the Regional Water Board are given the authority to implement regulations contained in 40 CFR 503, this Order may be reopened to incorporate appropriate time schedules and technical standards. The Discharger must comply with the standards and time schedules contained in 40 CFR 503 whether or not they have been incorporated into this Order.

c. **Biosolids Disposal Requirements**

i. The Discharger shall comply with the Monitoring and Reporting Program for biosolids disposal contained in Attachment E.

ii. Any proposed change in biosolids use or disposal practice from a previously approved practice shall be reported to the Executive Officer and U.S. EPA Regional Administrator at least **90 days** in advance of the change.

iii. The Discharger is encouraged to comply with the "Manual of Good Practice for Agricultural Land Application of Biosolids" developed by the California Water Environment Association.

d. **Biosolids Storage Requirements**

i. Facilities for the storage of Class B biosolids shall be located, designed and maintained to restrict public access to biosolids.

ii. Biosolids storage facilities shall be designed and maintained to prevent washout or inundation from a storm or flood with a return frequency of 100 years.

iii. Biosolids storage facilities, which contain biosolids, shall be designed and maintained to contain all storm water falling on the biosolids storage area during a rainfall year with a return frequency of 100 years.

iv. Biosolids storage facilities shall be designed, maintained and operated to minimize the generation of leachate.

e. **Collection System.** On May 2, 2006, the State Water Board adopted State Water Board Order 2006-0003, a Statewide General WDR for Sanitary Sewer Systems. The Discharger shall be subject to the requirements of Order 2006-0003 and any future revisions thereto. Order 2006-0003 requires that all public agencies that currently own or operate sanitary sewer systems apply for coverage under the General WDR. By November 2, 2006**,** the Discharger is required by that Order, not incorporated by reference herein, to apply for coverage under State Water Board Order 2006-0003 for operation of its wastewater collection system.

Regardless of the coverage obtained under Order 2006-0003, the Discharger's collection system is part of the treatment system that is subject to this Order. As such, pursuant to federal regulations, the Discharger must properly operate and maintain its collection system [40 CFR section 122.41(e)], report any non-compliance [40 CFR section 122.41(l)(6) and (7)], and mitigate any discharge from the collection system in violation of this Order [40 CFR. section 122.41(d)].

f. **Electronic Notification System.** This permit, and the Monitoring and Reporting Program which is a part of this permit, requires that certain parameters be monitored on a continuous basis. The wastewater treatment plant is not staffed on a full time basis. Permit violations or system upsets can go undetected during this period. The Discharger has an electronic system for operator notification for continuous recording device alarms.

6. Other Special Provisions

a. In the event of any change in control or ownership of land or waste discharge facilities presently owned or controlled by the Discharger, the Discharger shall

notify the succeeding owner or operator of the existence of this Order by letter, a copy of which shall be immediately forwarded to the Regional Water Board.

To assume operation under this Order, the succeeding owner or operator must apply in writing to the Executive Officer requesting transfer of the Order. The request must contain the requesting entity's full legal name, the State of incorporation if a corporation, address and telephone number of the persons responsible for contact with the Regional Water Board and a statement. The statement shall comply with the signatory and certification requirements in the Federal Standard Provisions (Attachment D, Section V.B.) and state that the new owner or operator assumes full responsibility for compliance with this Order. Failure to submit the request shall be considered a discharge without requirements, a violation of the California Water Code. Transfer shall be approved or disapproved in writing by the Executive Officer.

7. Compliance Schedules

a. **Compliance Schedules for Final Effluent Limitations for Ammonia and Selenium**

i. **By 18 May 2010,** the Discharger shall comply with the final effluent limitations for ammonia and selenium. On 13 August 2008, the Discharger submitted a compliance schedule justification for ammonia and selenium. The compliance schedule justification included all items specified in Paragraph 3, items (a) through (d), of section 2.1 of the SIP. As this compliance schedule is greater than one year, the Discharger shall submit semi-annual progress reports in accordance with the Monitoring and Reporting Program (Attachment E, Section X.D.1.)

ii. **Corrective Action Plan/Implementation Schedule.** The Discharger shall submit to the Regional Water Board a corrective action plan and implementation schedule to assure compliance with the final effluent limitations for ammonia and selenium **within six months from the effective date of this Order**.

iii. **Pollution Prevention Plan.** The Discharger shall prepare and implement a pollution prevention plan for ammonia and selenium, in accordance with CWC section 13263.3(d)(3). The minimum requirements for the pollution prevention plan are outlined in the Fact Sheet, Attachment F. A work plan and time schedule for preparation of the pollution prevention plan shall be completed and submitted to the Regional Water Board **within 6 months of the effective date of this Order** for approval by the Executive Officer. The Pollution Prevention Plan shall be completed and submitted to the Regional Water Board **within one (1) ~~yearfollowing~~year following work plan approval by the Executive Officer**, and progress reports shall be submitted in accordance with the Monitoring and Reporting Program (Attachment E, Section X.D.1.).

i. **Treatment Feasibility Study (Ammonia).** The Discharger is required to perform an engineering treatment feasibility study examining the feasibility, costs and benefits of different treatment options that may be required to remove ammonia from the discharge. A work plan and time schedule for preparation of the treatment feasibility study shall be completed and submitted to the Regional Water Board **within 6 months of the effective date of this Order** for approval by the Executive Officer. The treatment feasibility study shall be completed and submitted to the Regional Water Board **within one (1) year following work plan approval by the Executive Officer**, and progress reports shall be submitted in accordance with the Monitoring and Reporting Program (Attachment E, Section X.D.1.).

ii. **Treatment Feasibility Study (Selenium).** The Discharger has stated that elevated selenium within the City's potable water (groundwater) result in elevated selenium levels within the effluent. The Discharger is pursuing a new water surface supply which contains significantly lower levels of selenium in conjunction with Pollution Prevention Plans for reducing other potential sources of selenium within the wastewater. If the water supply project were to be delayed, the Discharger shall perform an engineering treatment feasibility study examining the feasibility, costs and benefits of different treatment options that may be required to remove selenium from the discharge. If the water supply project is delayed this permit may be reopened and a time schedule for treatment feasibility study shall be established.

VII. COMPLIANCE DETERMINATION

Compliance with the effluent limitations contained in section IV of this Order will be determined as specified below:

A. **BOD and TSS Effluent Limitations**. Compliance with the final effluent limitations for BOD and TSS required in sections IV.A.1 shall be ascertained by 24-hour composite samples. Compliance with effluent limitations sections IV.A.1 for percent removal shall be calculated using the arithmetic mean of 20°C BOD (5-day) and total suspended solids in effluent samples collected over a monthly period as a percentage of the arithmetic mean of the values for influent samples collected at approximately the same times during the same period.

B. **Total Mercury Mass Loading Effluent Limitations.** The procedures for calculating mass loadings are as follows:

1. The total pollutant mass load for each individual calendar month shall be determined using an average of all concentration data collected that month and the corresponding total monthly flow. All monitoring data collected under the monitoring and reporting program, pretreatment program and any special studies shall be used for these calculations.

2. In calculating compliance, the Discharger shall count all non-detect measures at one-half of the detection level. If compliance with the effluent limitation is not attained due to the non-detect contribution, the Discharger shall improve and implement available analytical capabilities and compliance shall be evaluated with consideration of the detection limits.

C. **Average Daily Discharge Flow Effluent Limitations**. The Average Daily Discharge Flow represents the daily average flow when groundwater is at or near normal and runoff is not occurring. Compliance with the Average Daily Discharge Flow effluent limitations will be measured at times when groundwater is at or near normal and runoff is not occurring.

D. **Total Coliform Organisms Effluent Limitations (Section IV.A.1.)**. For each day that an effluent sample is collected and analyzed for total coliform organisms, the 7-day median shall be determined by calculating the median concentration of total coliform bacteria in the effluent utilizing the bacteriological results of the last seven days for which analyses have been completed. If the 7-day median of total coliform organisms exceeds a most probable number (MPN) of 2.2 per 100 milliliters, the Discharger will be considered out of compliance for that parameter for that 1 day only within the reporting period.

E. **Chronic Whole Effluent Toxicity Effluent Limitation.** Compliance with the accelerated monitoring and TRE/TIE provisions contained at section VI.C.2.a shall constitute compliance with effluent limitation IV.A.1.e for chronic whole effluent toxicity.

ATTACHMENT A – DEFINITIONS

Arithmetic Mean (μ), also called the average, is the sum of measured values divided by the number of samples. For ambient water concentrations, the arithmetic mean is calculated as follows:

Arithmetic mean = $\mu = \Sigma x / n$ where: Σx is the sum of the measured ambient water concentrations, and n is the number of samples.

Average Monthly Effluent Limitation (AMEL): the highest allowable average of daily discharges over a calendar month, calculated as the sum of all daily discharges measured during a calendar month divided by the number of daily discharges measured during that month.

Average Weekly Effluent Limitation (AWEL): the highest allowable average of daily discharges over a calendar week (Sunday through Saturday), calculated as the sum of all daily discharges measured during a calendar week divided by the number of daily discharges measured during that week.

Best Practicable Treatment or Control (BPTC): BPTC is a requirement of State Water Resources Control Board Resolution 68-16 – "Statement of Policy with Respect to Maintaining High Quality of Waters in California" (referred to as the "Antidegradation Policy"). BPTC is the treatment or control of a discharge necessary to assure that, *"(a) a pollution or nuisance will not occur and (b) the highest water quality consistent with maximum benefit to the people of the State will be maintained."* Pollution is defined in CWC Section 13050(l). In general, an exceedance of a water quality objective in the Basin Plan constitutes "pollution".

Bioaccumulative pollutants are those substances taken up by an organism from its surrounding medium through gill membranes, epithelial tissue, or from food and subsequently concentrated and retained in the body of the organism.

Carcinogenic pollutants are substances that are known to cause cancer in living organisms.

Coefficient of Variation (*CV*) is a measure of the data variability and is calculated as the estimated standard deviation divided by the arithmetic mean of the observed values.

Daily Discharge: Daily Discharge is defined as either: (1) the total mass of the constituent discharged over the calendar day (12:00 am through 11:59 pm) or any 24-hour period that reasonably represents a calendar day for purposes of sampling (as specified in the permit), for a constituent with limitations expressed in units of mass or; (2) the unweighted arithmetic mean measurement of the constituent over the day for a constituent with limitations expressed in other units of measurement (e.g., concentration).

The daily discharge may be determined by the analytical results of a composite sample taken over the course of one day (a calendar day or other 24-hour period defined as a day) or by the

arithmetic mean of analytical results from one or more grab samples taken over the course of the day.

For composite sampling, if 1 day is defined as a 24-hour period other than a calendar day, the analytical result for the 24-hour period will be considered as the result for the calendar day in which the 24-hour period ends.

Detected, but Not Quantified (DNQ) are those sample results less than the RL, but greater than or equal to the laboratory's MDL.

Dilution Credit is the amount of dilution granted to a discharge in the calculation of a water quality-based effluent limitation, based on the allowance of a specified mixing zone. It is calculated from the dilution ratio or determined through conducting a mixing zone study or modeling of the discharge and receiving water.

Effluent Concentration Allowance (ECA) is a value derived from the water quality criterion/objective, dilution credit, and ambient background concentration that is used, in conjunction with the coefficient of variation for the effluent monitoring data, to calculate a long-term average (LTA) discharge concentration. The ECA has the same meaning as waste load allocation (WLA) as used in U.S. EPA guidance (Technical Support Document For Water Quality-based Toxics Control, March 1991, second printing, EPA/505/2-90-001).

Enclosed Bays means indentations along the coast that enclose an area of oceanic water within distinct headlands or harbor works. Enclosed bays include all bays where the narrowest distance between the headlands or outermost harbor works is less than 75 percent of the greatest dimension of the enclosed portion of the bay. Enclosed bays include, but are not limited to, Humboldt Bay, Bodega Harbor, Tomales Bay, Drake's Estero, San Francisco Bay, Morro Bay, Los Angeles-Long Beach Harbor, Upper and Lower Newport Bay, Mission Bay, and San Diego Bay. Enclosed bays do not include inland surface waters or ocean waters.

Estimated Chemical Concentration is the estimated chemical concentration that results from the confirmed detection of the substance by the analytical method below the ML value.

Estuaries means waters, including coastal lagoons, located at the mouths of streams that serve as areas of mixing for fresh and ocean waters. Coastal lagoons and mouths of streams that are temporarily separated from the ocean by sandbars shall be considered estuaries. Estuarine waters shall be considered to extend from a bay or the open ocean to a point upstream where there is no significant mixing of fresh water and seawater. Estuarine waters include~~d~~, but are not limited to, the Sacramento-San Joaquin Delta, as defined in Water Code section 12220, Suisun Bay, Carquinez Strait downstream to the Carquinez Bridge, and appropriate areas of the Smith, Mad, Eel, Noyo, Russian, Klamath, San Diego, and Otay rivers. Estuaries do not include inland surface waters or ocean waters.

Inland Surface Waters are all surface waters of the State that do not include the ocean, enclosed bays, or estuaries.

Instantaneous Maximum Effluent Limitation: the highest allowable value for any single grab sample or aliquot (i.e., each grab sample or aliquot is independently compared to the instantaneous maximum limitation).

Instantaneous Minimum Effluent Limitation: the lowest allowable value for any single grab sample or aliquot (i.e., each grab sample or aliquot is independently compared to the instantaneous minimum limitation).

Maximum Daily Effluent Limitation (MDEL) means the highest allowable daily discharge of a pollutant, over a calendar day (or 24-hour period). For pollutants with limitations expressed in units of mass, the daily discharge is calculated as the total mass of the pollutant discharged over the day. For pollutants with limitations expressed in other units of measurement, the daily discharge is calculated as the arithmetic mean measurement of the pollutant over the day.

Median is the middle measurement in a set of data. The median of a set of data is found by first arranging the measurements in order of magnitude (either increasing or decreasing order). If the number of measurements (n) is odd, then the median = $X_{(n+1)/2}$. If n is even, then the median = $(X_{n/2} + X_{(n/2)+1})/2$ (i.e., the midpoint between the $n/2$ and $n/2+1$).

Method Detection Limit (MDL) is the minimum concentration of a substance that can be measured and reported with 99 percent confidence that the analyte concentration is greater than zero, as defined in title 40 of the Code of Federal Regulations, Part 136, Attachment B, revised as of July 3, 1999.

Minimum Level (ML) is the concentration at which the entire analytical system must give a recognizable signal and acceptable calibration point. The ML is the concentration in a sample that is equivalent to the concentration of the lowest calibration standard analyzed by a specific analytical procedure, assuming that all the method specified sample weights, volumes, and processing steps have been followed.

Mixing Zone is a limited volume of receiving water that is allocated for mixing with a wastewater discharge where water quality criteria can be exceeded without causing adverse effects to the overall water body.

Not Detected (ND) are those sample results less than the laboratory's MDL.

Ocean Waters are the territorial marine waters of the State as defined by California law to the extent these waters are outside of enclosed bays, estuaries, and coastal lagoons. Discharges to ocean waters are regulated in accordance with the State Water Board's California Ocean Plan.

Persistent pollutants are substances for which degradation or decomposition in the environment is nonexistent or very slow.

Pollutant Minimization Program (PMP) means waste minimization and pollution prevention actions that include, but are not limited to, product substitution, waste stream recycling, alternative waste management methods, and education of the public and businesses. The

goal of the PMP shall be to reduce all potential sources of a priority pollutant(s) through pollutant minimization (control) strategies, including pollution prevention measures as appropriate, to maintain the effluent concentration at or below the water quality-based effluent limitation. Pollution prevention measures may be particularly appropriate for persistent bioaccumulative priority pollutants where there is evidence that beneficial uses are being impacted. The Regional Water Board may consider cost effectiveness when establishing the requirements of a PMP. The completion and implementation of a Pollution Prevention Plan, if required pursuant to Water Code section 13263.3(d), shall be considered to fulfill the PMP requirements.

Pollution Prevention means any action that causes a net reduction in the use or generation of a hazardous substance or other pollutant that is discharged into water and includes, but is not limited to, input change, operational improvement, production process change, and product reformulation (as defined in Water Code section 13263.3). Pollution prevention does not include actions that merely shift a pollutant in wastewater from one environmental medium to another environmental medium, unless clear environmental benefits of such an approach are identified to the satisfaction of the State or Regional Water Board.

Reporting Level (RL) is the ML (and its associated analytical method) chosen by the Discharger for reporting and compliance determination from the MLs included in this Order. The MLs included in this Order correspond to approved analytical methods for reporting a sample result that are selected by the Regional Water Board either from Appendix 4 of the SIP in accordance with section 2.4.2 of the SIP or established in accordance with section 2.4.3 of the SIP. The ML is based on the proper application of method-based analytical procedures for sample preparation and the absence of any matrix interferences. Other factors may be applied to the ML depending on the specific sample preparation steps employed. For example, the treatment typically applied in cases where there are matrix-effects is to dilute the sample or sample aliquot by a factor of ten. In such cases, this additional factor must be applied to the ML in the computation of the RL.

Satellite Collection System is the portion, if any, of a sanitary sewer system owned or operated by a different public agency than the agency that owns and operates the wastewater treatment facility that a sanitary sewer system is tributary to.

Source of Drinking Water is any water designated as municipal or domestic supply (MUN) in a Regional Water Board Basin Plan.

Standard Deviation (σ) is a measure of variability that is calculated as follows:

$$\sigma = (\sum[(x - \mu)^2]/(n - 1))^{0.5}$$

where:

x is the observed value;
μ is the arithmetic mean of the observed values; and
n is the number of samples.

Toxicity Reduction Evaluation (TRE) is a study conducted in a step-wise process designed to identify the causative agents of effluent or ambient toxicity, isolate the sources of toxicity,

evaluate the effectiveness of toxicity control options, and then confirm the reduction in toxicity. The first steps of the TRE consist of the collection of data relevant to the toxicity, including additional toxicity testing, and an evaluation of facility operations and maintenance practices, and best management practices. A Toxicity Identification Evaluation (TIE) may be required as part of the TRE, if appropriate. (A TIE is a set of procedures to identify the specific chemical(s) responsible for toxicity. These procedures are performed in three phases (characterization, identification, and confirmation) using aquatic organism toxicity tests.)

ATTACHMENT B – MAP

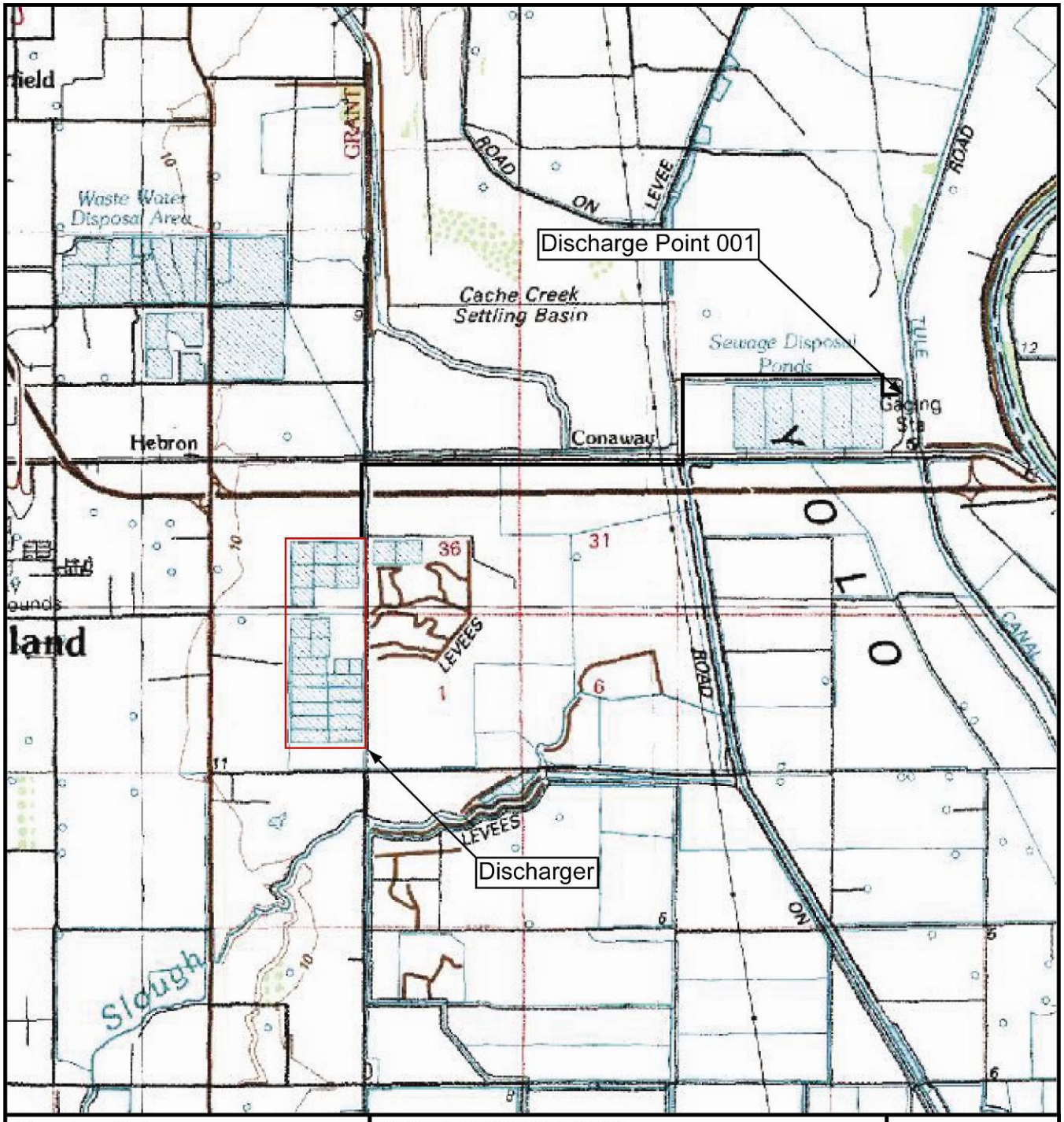

Drawing Reference: WOODLAND U.S.G.S TOPOGRAPHIC MAP 7.5 MINUTE QUADRANGLE *Topographic Map* *Dated 7/1/1994*	**SITE LOCATION MAP** CITY OF WOODLAND CITY OF WOODLAND WATER POLLUTION CONTROL FACILITY YOLO COUNTY	N W E S

ATTACHMENT C – FLOW SCHEMATIC

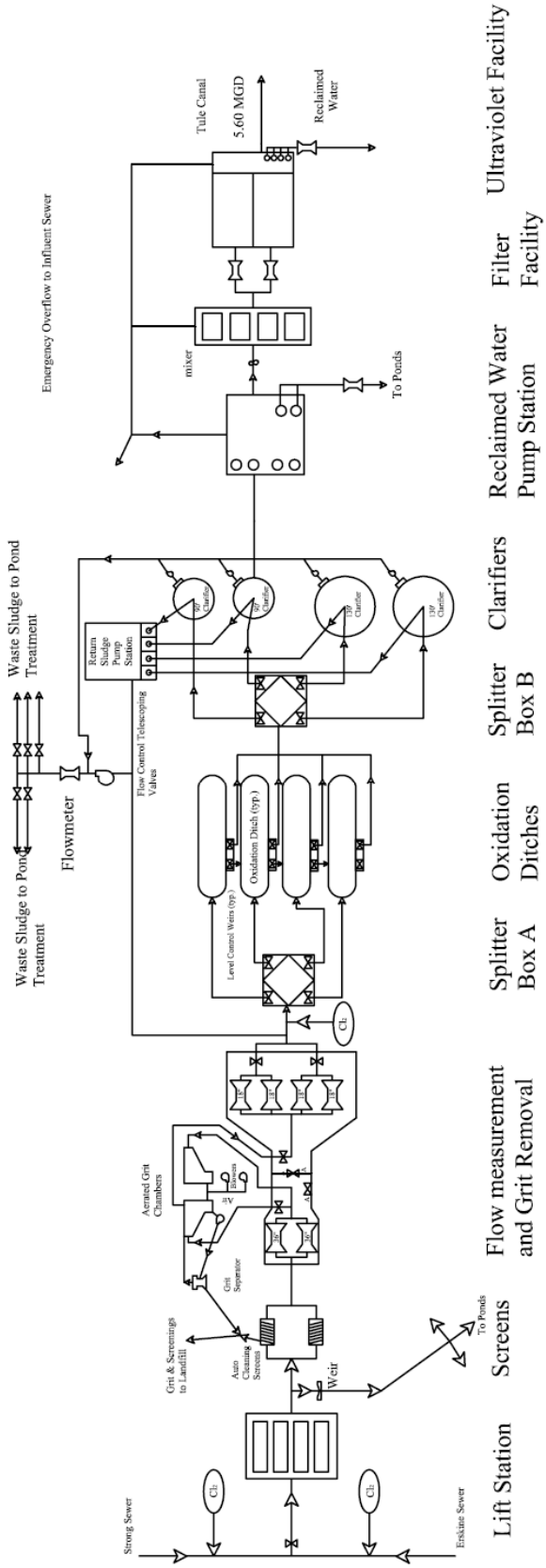

Figure B3-1
City of Woodland Waste Water Treatment Plant
Process Flow Diagram

ATTACHMENT D –STANDARD PROVISIONS

I. STANDARD PROVISIONS – PERMIT COMPLIANCE

A. Duty to Comply

1. The Discharger must comply with all of the conditions of this Order. Any noncompliance constitutes a violation of the Clean Water Act (CWA) and the California Water Code and is grounds for enforcement action, for permit termination, revocation and reissuance, or modification; or denial of a permit renewal application. (40 C.F.R. § 122.41(a).)

2. The Discharger shall comply with effluent standards or prohibitions established under Section 307(a) of the CWA for toxic pollutants and with standards for sewage sludge use or disposal established under Section 405(d) of the CWA within the time provided in the regulations that establish these standards or prohibitions, even if this Order has not yet been modified to incorporate the requirement. (40 C.F.R. § 122.41(a)(1).)

B. Need to Halt or Reduce Activity Not a Defense

It shall not be a defense for a Discharger in an enforcement action that it would have been necessary to halt or reduce the permitted activity in order to maintain compliance with the conditions of this Order. (40 C.F.R. § 122.41(c).)

C. Duty to Mitigate

The Discharger shall take all reasonable steps to minimize or prevent any discharge or sludge use or disposal in violation of this Order that has a reasonable likelihood of adversely affecting human health or the environment. (40 C.F.R. § 122.41(d).)

D. Proper Operation and Maintenance

The Discharger shall at all times properly operate and maintain all facilities and systems of treatment and control (and related appurtenances) which are installed or used by the Discharger to achieve compliance with the conditions of this Order. Proper operation and maintenance also includes adequate laboratory controls and appropriate quality assurance procedures. This provision requires the operation of backup or auxiliary facilities or similar systems that are installed by a Discharger only when necessary to achieve compliance with the conditions of this Order. (40 C.F.R. § 122.41(e).)

E. Property Rights

1. This Order does not convey any property rights of any sort or any exclusive privileges. (40 C.F.R. § 122.41(g).)

2. The issuance of this Order does not authorize any injury to persons or property or invasion of other private rights, or any infringement of state or local law or regulations. (40 C.F.R. § 122.5(c))

F. Inspection and Entry

The Discharger shall allow the Regional Water Board, State Water Board, United States Environmental Protection Agency (USEPA), and/or their authorized representatives (including an authorized contractor acting as their representative), upon the presentation of credentials and other documents, as may be required by law, to (40 C.F.R. § 122.41(i); Wat. Code, § 13383):

1. Enter upon the Discharger's premises where a regulated facility or activity is located or conducted, or where records are kept under the conditions of this Order (40 C.F.R. § 122.41(i)(1));

2. Have access to and copy, at reasonable times, any records that must be kept under the conditions of this Order (40 C.F.R. § 122.41(i)(2));

3. Inspect and photograph, at reasonable times, any facilities, equipment (including monitoring and control equipment), practices, or operations regulated or required under this Order (40 C.F.R. § 122.41(i)(3)); and

4. Sample or monitor, at reasonable times, for the purposes of assuring Order compliance or as otherwise authorized by the CWA or the Water Code, any substances or parameters at any location. (40 C.F.R. § 122.41(i)(4).)

G. Bypass

1. Definitions

   a. “Bypass” means the intentional diversion of waste streams from any portion of a treatment facility. (40 C.F.R. § 122.41(m)(1)(i))

   b. “Severe property damage” means substantial physical damage to property, damage to the treatment facilities, which causes them to become inoperable, or substantial and permanent loss of natural resources that can reasonably be expected to occur in the absence of a bypass. Severe property damage does not mean economic loss caused by delays in production. (40 C.F.R. § 122.41(m)(1)(ii).)

2. Bypass not exceeding limitations. The Discharger may allow any bypass to occur which does not cause exceedances of effluent limitations, but only if it is for essential maintenance to assure efficient operation. These bypasses are not subject to the provisions listed in Standard Provisions – Permit Compliance I.G.3, I.G.4, and I.G.5 below. (40 C.F.R. § 122.41(m)(2).)

3. Prohibition of bypass. Bypass is prohibited, and the Regional Water Board may take enforcement action against a Discharger for bypass, unless (40 C.F.R. § 122.41(m)(4)(i)):

    a. Bypass was unavoidable to prevent loss of life, personal injury, or severe property damage (40 C.F.R. § 122.41(m)(4)(i)(A));

    b. There were no feasible alternatives to the bypass, such as the use of auxiliary treatment facilities, retention of untreated wastes, or maintenance during normal periods of equipment downtime. This condition is not satisfied if adequate back-up equipment should have been installed in the exercise of reasonable engineering judgment to prevent a bypass that occurred during normal periods of equipment downtime or preventive maintenance (40 C.F.R. § 122.41(m)(4)(i)(B)); and

    c. The Discharger submitted notice to the Regional Water Board as required under Standard Provisions – Permit Compliance I.G.5 below. (40 C.F.R. § 122.41(m)(4)(i)(C).)

4. The Regional Water Board may approve an anticipated bypass, after considering its adverse effects, if the Regional Water Board determines that it will meet the three conditions listed in Standard Provisions – Permit Compliance I.G.3 above. (40 C.F.R. § 122.41(m)(4)(ii).)

5. Notice

    a. Anticipated bypass. If the Discharger knows in advance of the need for a bypass, it shall submit a notice, if possible at least 10 days before the date of the bypass. (40 C.F.R. § 122.41(m)(3)(i).)

    b. Unanticipated bypass. The Discharger shall submit notice of an unanticipated bypass as required in Standard Provisions - Reporting V.E below (24-hour notice). (40 C.F.R. § 122.41(m)(3)(ii).)

H. Upset

Upset means an exceptional incident in which there is unintentional and temporary noncompliance with technology based permit effluent limitations because of factors beyond the reasonable control of the Discharger. An upset does not include noncompliance to the extent caused by operational error, improperly designed treatment facilities, inadequate treatment facilities, lack of preventive maintenance, or careless or improper operation. (40 C.F.R. § 122.41(n)(1).)

1. Effect of an upset. An upset constitutes an affirmative defense to an action brought for noncompliance with such technology based permit effluent limitations if the requirements of Standard Provisions – Permit Compliance I.H.2 below are met. No determination made during administrative review of claims that noncompliance was

caused by upset, and before an action for noncompliance, is final administrative action subject to judicial review. (40 C.F.R. § 122.41(n)(2).).

2. Conditions necessary for a demonstration of upset. A Discharger who wishes to establish the affirmative defense of upset shall demonstrate, through properly signed, contemporaneous operating logs or other relevant evidence that (40 C.F.R. § 122.41(n)(3)):

   a. An upset occurred and that the Discharger can identify the cause(s) of the upset (40 C.F.R. § 122.41(n)(3)(i));

   b. The permitted facility was, at the time, being properly operated (40 C.F.R. § 122.41(n)(3)(ii));

   c. The Discharger submitted notice of the upset as required in Standard Provisions – Reporting V.E.2.b below (24-hour notice) (40 C.F.R. § 122.41(n)(3)(iii)); and

   d. The Discharger complied with any remedial measures required under Standard Provisions – Permit Compliance I.C above. (40 C.F.R. § 122.41(n)(3)(iv).)

3. Burden of proof. In any enforcement proceeding, the Discharger seeking to establish the occurrence of an upset has the burden of proof. (40 C.F.R. § 122.41(n)(4).)

II. STANDARD PROVISIONS – PERMIT ACTION

A. General

This Order may be modified, revoked and reissued, or terminated for cause. The filing of a request by the Discharger for modification, revocation and reissuance, or termination, or a notification of planned changes or anticipated noncompliance does not stay any Order condition. (40 C.F.R. § 122.41(f).)

B. Duty to Reapply

If the Discharger wishes to continue an activity regulated by this Order after the expiration date of this Order, the Discharger must apply for and obtain a new permit. (40 C.F.R. § 122.41(b).)

C. Transfers

This Order is not transferable to any person except after notice to the Regional Water Board. The Regional Water Board may require modification or revocation and reissuance of the Order to change the name of the Discharger and incorporate such other requirements as may be necessary under the CWA and the Water Code. (40 C.F.R. § 122.41(l)(3); § 122.61.)

III. STANDARD PROVISIONS – MONITORING

A. Samples and measurements taken for the purpose of monitoring shall be representative of the monitored activity. (40 C.F.R. § 122.41(j)(1).)

B. Monitoring results must be conducted according to test procedures under Part 136 or, in the case of sludge use or disposal, approved under Part 136 unless otherwise specified in Part 503 unless other test procedures have been specified in this Order. (40 C.F.R. § 122.41(j)(4); § 122.44(i)(1)(iv).)

IV. STANDARD PROVISIONS – RECORDS

A. Except for records of monitoring information required by this Order related to the Discharger's sewage sludge use and disposal activities, which shall be retained for a period of at least five years (or longer as required by Part 503), the Discharger shall retain records of all monitoring information, including all calibration and maintenance records and all original strip chart recordings for continuous monitoring instrumentation, copies of all reports required by this Order, and records of all data used to complete the application for this Order, for a period of at least three (3) years from the date of the sample, measurement, report or application. This period may be extended by request of the Regional Water Board Executive Officer at any time. (40 C.F.R. § 122.41(j)(2).)

B. Records of monitoring information shall include:

1. The date, exact place, and time of sampling or measurements (40 C.F.R. § 122.41(j)(3)(i));

2. The individual(s) who performed the sampling or measurements (40 C.F.R. § 122.41(j)(3)(ii));

3. The date(s) analyses were performed (40 C.F.R. § 122.41(j)(3)(iii));

4. The individual(s) who performed the analyses (40 C.F.R. § 122.41(j)(3)(iv));

5. The analytical techniques or methods used (40 C.F.R. § 122.41(j)(3)(v)); and

6. The results of such analyses. (40 C.F.R. § 122.41(j)(3)(vi).)

C. Claims of confidentiality for the following information will be denied (40 C.F.R. § 122.7(b)):

1. The name and address of any permit applicant or Discharger (40 C.F.R. § 122.7(b)(1)); and

2. Permit applications and attachments, permits and effluent data. (40 C.F.R. § 122.7(b)(2).)

V. STANDARD PROVISIONS – REPORTING

A. Duty to Provide Information

The Discharger shall furnish to the Regional Water Board, State Water Board, or USEPA within a reasonable time, any information which the Regional Water Board, State Water Board, or USEPA may request to determine whether cause exists for modifying, revoking and reissuing, or terminating this Order or to determine compliance with this Order. Upon request, the Discharger shall also furnish to the Regional Water Board, State Water Board, or USEPA copies of records required to be kept by this Order. (40 C.F.R. § 122.41(h); Wat. Code, § 13267.)

B. Signatory and Certification Requirements

1. All applications, reports, or information submitted to the Regional Water Board, State Water Board, and/or USEPA shall be signed and certified in accordance with Standard Provisions – Reporting V.B.2, V.B.3, V.B.4, and V.B.5 below. (40 C.F.R. § 122.41(k).)

2. All permit applications shall be signed by either a principal executive officer or ranking elected official. For purposes of this provision, a principal executive officer of a federal agency includes: (i) the chief executive officer of the agency, or (ii) a senior executive officer having responsibility for the overall operations of a principal geographic unit of the agency (e.g., Regional Administrators of USEPA). (40 C.F.R. § 122.22(a)(3).).

3. All reports required by this Order and other information requested by the Regional Water Board, State Water Board, or USEPA shall be signed by a person described in Standard Provisions – Reporting V.B.2 above, or by a duly authorized representative of that person. A person is a duly authorized representative only if:

    a. The authorization is made in writing by a person described in Standard Provisions – Reporting V.B.2 above (40 C.F.R. § 122.22(b)(1));

    b. The authorization specifies either an individual or a position having responsibility for the overall operation of the regulated facility or activity such as the position of plant manager, operator of a well or a well field, superintendent, position of equivalent responsibility, or an individual or position having overall responsibility for environmental matters for the company. (A duly authorized representative may thus be either a named individual or any individual occupying a named position.) (40 C.F.R. § 122.22(b)(2)); and

    c. The written authorization is submitted to the Regional Water Board and State Water Board. (40 C.F.R. § 122.22(b)(3).)

4. If an authorization under Standard Provisions – Reporting V.B.3 above is no longer accurate because a different individual or position has responsibility for the overall operation of the facility, a new authorization satisfying the requirements of Standard Provisions – Reporting V.B.3 above must be submitted to the Regional Water Board and State Water Board prior to or together with any reports, information, or applications, to be signed by an authorized representative. (40 C.F.R. § 122.22(c).)

5. Any person signing a document under Standard Provisions – Reporting V.B.2 or V.B.3 above shall make the following certification:

   "I certify under penalty of law that this document and all attachments were prepared under my direction or supervision in accordance with a system designed to assure that qualified personnel properly gather and evaluate the information submitted. Based on my inquiry of the person or persons who manage the system or those persons directly responsible for gathering the information, the information submitted is, to the best of my knowledge and belief, true, accurate, and complete. I am aware that there are significant penalties for submitting false information, including the possibility of fine and imprisonment for knowing violations." (40 C.F.R. § 122.22(d).)

C. Monitoring Reports

1. Monitoring results shall be reported at the intervals specified in the Monitoring and Reporting Program (Attachment E) in this Order. (40 C.F.R. § 122.22(l)(4).)

2. Monitoring results must be reported on a Discharge Monitoring Report (DMR) form or forms provided or specified by the Regional Water Board or State Water Board for reporting results of monitoring of sludge use or disposal practices. (40 C.F.R. § 122.41(l)(4)(i).)

3. If the Discharger monitors any pollutant more frequently than required by this Order using test procedures approved under Part 136 or, in the case of sludge use or disposal, approved under Part 136 unless otherwise specified in Part 503, or as specified in this Order, the results of this monitoring shall be included in the calculation and reporting of the data submitted in the DMR or sludge reporting form specified by the Regional Water Board. (40 C.F.R. § 122.41(l)(4)(ii).)

4. Calculations for all limitations, which require averaging of measurements, shall utilize an arithmetic mean unless otherwise specified in this Order. (40 C.F.R. § 122.41(l)(4)(iii).)

D. Compliance Schedules

Reports of compliance or noncompliance with, or any progress reports on, interim and final requirements contained in any compliance schedule of this Order, shall be submitted no later than 14 days following each schedule date. (40 C.F.R. § 122.41(l)(5).)

E. Twenty-Four Hour Reporting

1. The Discharger shall report any noncompliance that may endanger health or the environment. Any information shall be provided orally within 24 hours from the time the Discharger becomes aware of the circumstances. A written submission shall also be provided within five (5) days of the time the Discharger becomes aware of the circumstances. The written submission shall contain a description of the noncompliance and its cause; the period of noncompliance, including exact dates and times, and if the noncompliance has not been corrected, the anticipated time it is expected to continue; and steps taken or planned to reduce, eliminate, and prevent reoccurrence of the noncompliance. (40 C.F.R. § 122.41(l)(6)(i).)

2. The following shall be included as information that must be reported within 24 hours under this paragraph (40 C.F.R. § 122.41(l)(6)(ii)):

   a. Any unanticipated bypass that exceeds any effluent limitation in this Order. (40 C.F.R. § 122.41(l)(6)(ii)(A).)

   b. Any upset that exceeds any effluent limitation in this Order. (40 C.F.R. § 122.41(l)(6)(ii)(B).)

3. The Regional Water Board may waive the above-required written report under this provision on a case-by-case basis if an oral report has been received within 24 hours. (40 C.F.R. § 122.41(l)(6)(iii).)

F. Planned Changes

The Discharger shall give notice to the Regional Water Board as soon as possible of any planned physical alterations or additions to the permitted facility. Notice is required under this provision only when (40 C.F.R. § 122.41(l)(1)):

1. The alteration or addition to a permitted facility may meet one of the criteria for determining whether a facility is a new source in section 122.29(b) (40 C.F.R. § 122.41(l)(1)(i)); or

2. The alteration or addition could significantly change the nature or increase the quantity of pollutants discharged. This notification applies to pollutants that are not subject to effluent limitations in this Order. (40 C.F.R. § 122.41(l)(1)(ii).)

3. The alteration or addition results in a significant change in the Discharger's sludge use or disposal practices, and such alteration, addition, or change may justify the application of permit conditions that are different from or absent in the existing permit, including notification of additional use or disposal sites not reported during the permit application process or not reported pursuant to an approved land application plan. (40 C.F.R.§ 122.41(l)(1)(iii).)

G. Anticipated Noncompliance

The Discharger shall give advance notice to the Regional Water Board or State Water Board of any planned changes in the permitted facility or activity that may result in noncompliance with General Order requirements. (40 C.F.R. § 122.41(l)(2).)

H. Other Noncompliance

The Discharger shall report all instances of noncompliance not reported under Standard Provisions – Reporting V.C, V.D, and V.E above at the time monitoring reports are submitted. The reports shall contain the information listed in Standard Provision – Reporting V.E above. (40 C.F.R. § 122.41(l)(7).)

I. Other Information

When the Discharger becomes aware that it failed to submit any relevant facts in a permit application, or submitted incorrect information in a permit application or in any report to the Regional Water Board, State Water Board, or USEPA, the Discharger shall promptly submit such facts or information. (40 C.F.R. § 122.41(l)(8).)

VI. STANDARD PROVISIONS – ENFORCEMENT

A. The Regional Water Board is authorized to enforce the terms of this permit under several provisions of the Water Code, including, but not limited to, sections 13385, 13386, and 13387.

VII. ADDITIONAL PROVISIONS – NOTIFICATION LEVELS

A. Publicly-Owned Treatment Works (POTWs)

All POTWs shall provide adequate notice to the Regional Water Board of the following (40 C.F.R. § 122.42(b)):

1. Any new introduction of pollutants into the POTW from an indirect discharger that would be subject to sections 301 or 306 of the CWA if it were directly discharging those pollutants (40 C.F.R. § 122.42(b)(1)); and

2. Any substantial change in the volume or character of pollutants being introduced into that POTW by a source introducing pollutants into the POTW at the time of adoption of the Order. (40 C.F.R. § 122.42(b)(2).)

3. Adequate notice shall include information on the quality and quantity of effluent introduced into the POTW as well as any anticipated impact of the change on the quantity or quality of effluent to be discharged from the POTW. (40 C.F.R. § 122.42(b)(3).)

ATTACHMENT E – MONITORING AND REPORTING PROGRAM

Table of Contents

Attachment E – Monitoring and Reporting Program (MRP) E-1
I. General Monitoring Provisions E-1
II. Monitoring Locations E-1
III. Influent Monitoring Requirements E-2
A. Monitoring Location INF-001 ..... E-2
IV. Effluent Monitoring Requirements E-2
A. Monitoring Location EFF-001 ..... E-2
V. Whole Effluent Toxicity Testing Requirements E-4
VI. Land Discharge Monitoring Requirements – NOT APPLICABLE E-7
VII. Reclamation Monitoring Requirements – NOT APPLICABLE E-7
VIII. Receiving Water Monitoring Requirements – Surface Water and Groundwater E-7
A. Monitoring Location RSW-001 and RSW-002 ..... E-7
B. Groundwater Monitoring E-7
IX. Other Monitoring Requirements E-8
A. Ultraviolet Disinfection System E-8
B. Biosolids E-9
C. Municipal Water Supply E-9
D. Storage Ponds Monitoring E-10
X. Reporting Requirements E-10
A. General Monitoring and Reporting Requirements E-10
B. Self Monitoring Reports (SMRs) E-12
C. Discharge Monitoring Reports (DMRs) E-14
D. Other Reports E-14

List of Tables

Table E-1. Monitoring Station Locations E-2
Table E-2. Influent Monitoring E-2
Table E-3. Effluent Monitoring E-3
Table E-4. Chronic Toxicity Testing Dilution Series E-6
Table E-5. Receiving Water Monitoring Requirements [1] E-7
Table E-6. Groundwater Monitoring Requirements[1] E-8
Table E-7. Ultraviolet Disinfection System Monitoring Requirements E-8
Table E-8. Municipal Water Supply Monitoring Requirements E-10
Table E-9. Storage Ponds Monitoring Requirements E-10
Table E-10. Monitoring Periods and Reporting Schedule E-13
Table E-11. Reporting Requirements for Special Provisions Progress Reports E-14

ATTACHMENT E – MONITORING AND REPORTING PROGRAM (MRP)

The Code of Federal Regulations section 122.48 requires that all NPDES permits specify monitoring and reporting requirements. Water Code Sections 13267 and 13383 also authorize the Regional Water Quality Control Board (Regional Water Board) to require technical and monitoring reports. This MRP establishes monitoring and reporting requirements, which implement the federal and state regulations.

I. GENERAL MONITORING PROVISIONS

A. Samples and measurements taken as required herein shall be representative of the volume and nature of the monitored discharge. All samples shall be taken at the monitoring locations specified below and, unless otherwise specified, before the monitored flow joins or is diluted by any other waste stream, body of water, or substance. Monitoring locations shall not be changed without notification to and the approval of this Regional Water Board.

B. Chemical, bacteriological, and bioassay analyses shall be conducted at a laboratory certified for such analyses by the State Department of Public Health ~~Services~~. In the event a certified laboratory is not available to the Discharger, analyses performed by a noncertified laboratory will be accepted provided a Quality Assurance-Quality Control Program is instituted by the laboratory. A manual containing the steps followed in this program must be kept in the laboratory and shall be available for inspection by Regional Water Board staff. The Quality Assurance-Quality Control Program must conform to USEPA guidelines or to procedures approved by the Regional Water Board.

C. All analyses shall be performed in a laboratory certified to perform such analyses by the California Department of Health Services. Laboratories that perform sample analyses shall be identified in all monitoring reports.

D. Appropriate flow measurement devices and methods consistent with accepted scientific practices shall be selected and used to ensure the accuracy and reliability of measurements of the volume of monitored discharges. All monitoring instruments and devices used by the Discharger to fulfill the prescribed monitoring program shall be properly maintained and calibrated as necessary to ensure their continued accuracy. All flow measurement devices shall be calibrated at least once per year to ensure continued accuracy of the devices.

E. Monitoring results, including noncompliance, shall be reported at intervals and in a manner specified in this Monitoring and Reporting Program.

II. MONITORING LOCATIONS

The Discharger shall establish the following monitoring locations to demonstrate compliance with the effluent limitations, discharge specifications, and other requirements in this Order:

Table E-1. Monitoring Station Locations

Discharge Point Name	Monitoring Location Name	Monitoring Location Description (include Latitude and Longitude when available)
--	INF-001	Influent enters the headwork
001	EFF-001	Treated Effluent discharge into Tule Canal 38º, ~~39~~40', 5~~43~~" N, -121 º, ~~42~~38', 42" W
--	RSW-001	Tule Canal, 800 feet upstream from the point of discharges
--	RSW-002	Tule Canal, 1800 feet downstream from the point of discharge
--	UVS-001	A location where a representative sample of the effluent from the ultraviolet disinfection system can be obtained.
--	BIO-001	Biosolids storage basins
--	SPL-001	Water supply
--	GW-00(n)	Groundwater monitoring network

III. INFLUENT MONITORING REQUIREMENTS

A. Monitoring Location INF-001

1. The Discharger shall monitor influent wastewater that is collected and pumped to the facility and discharged into the plant's influent metering devices (parshall flumes), continuing into the headworks structure at INF-001 as follows:

Table E-2. Influent Monitoring

Parameter	Units	Sample Type	Minimum Sampling Frequency	Required Analytical Test Method
BOD 5-day 20°C	mg/L, lbs/day	24-hr Composite	1/week	[1]
Total Suspended Solids	mg/L, lbs/day	24-hr Composite	1/week	[1]
Flow	mgd	Meter	Continuous	[1]

[1] Pollutants shall be analyzed using the analytical methods described in 40 CFR sections 136; for priority pollutants the methods must meet the lowest minimum levels (MLs) specified in Attachment 4 of the SIP, where no methods are specified for a given pollutant, by methods approved by this Regional Water Board or the State Board.

IV. EFFLUENT MONITORING REQUIREMENTS

A. Monitoring Location EFF-001

1. The Discharger shall monitor treatment plant effluent at EFF-001 as follows. If more than one analytical test method is listed for a given parameter, the Discharger must select from the listed methods and corresponding Minimum Level:

Table E-3. Effluent Monitoring

Parameter	Units	Sample Type	Minimum Sampling Frequency	Required Analytical Test Method and (Minimum Level, units), respectively
Flow	mgd	Meter	Continuous	[1]
Temperature[2]	°F	Meter	3/week	[1]
BOD 5-day 20°C	mg/L	24-hr Composite[3]	3/week	[1]
Total Suspended Solids	mg/L	24-hr Composite[3]	3/week	[1]
pH	standard units	Meter	3/week	[1]
Hardness (as $CaCO_3$)	mg/L	Grab	1/month	[1]
Total Coliform Organisms	MPN/100 mL	Grab	3/week	[1]
~~Settleable Solids~~	~~mL/L~~	~~Grab~~	~~3/week~~	~~[1]~~
Turbidity	NTU	Meter	Continuous	[1]
Chlorine, Total Residual[8]	mg/L	Grab	1/Day/event	[1]
Electrical Conductivity @ 25°C	µmhos/cm	Grab	3/week	[1]
Total Dissolved Solids	mg/L	Grab	1/month	[1]
Ammonia (as N)[4,5]	mg/L	Grab	3/week	[1]
Boron	µg/L	Grab	2/year	[1]
Mercury	µg/L	Grab	1/month	[1]
Nitrate (as N)	mg/L	Grab	1/month	[1]
Selenium	µg/L	Grab	1/month	[1]
Priority Pollutants[6,7]	µg/L	Grab	1/year	[1]

[1] Pollutants shall be analyzed using the analytical methods described in 40 CFR Part 136; for priority pollutants the methods must meet the lowest minimum levels (MLs) specified in Appendix 4 of the SIP, where no methods are specified for a given pollutant, by methods approved by this Regional Water Board or the State Water Board.

[2] A hand-held field meter may be used, provided the meter utilizes a USEPA-approved algorithm/method and is calibrated and maintained in accordance with the manufacturer's instructions. A calibration and maintenance log for each meter used for monitoring required by this Monitoring and Reporting Program shall be maintained at the Facility.

[3] 24-hour flow proportioned composite.

[4] Concurrent with biotoxicity monitoring

[5] Temperature and pH shall be recorded at the time of ammonia sample collection

[6] For priority pollutant constituents with effluent limitations, detection limits shall be below the effluent limitations. If the lowest minimum level (ML) published in Appendix 4 of the Policy for Implementation of Toxics Standards for Inland Surface Waters, Enclosed Bays, and Estuaries of California (State Implementation Plan or SIP) is not below the effluent limitation, the detection limit shall be the lowest ML. For priority pollutant constituents without effluent limitations, the detection limits shall be equal to or less than the lowest ML published in Appendix 4 of the SIP.

[7] Concurrent with receiving surface water sampling.

[8] Hypochlorite will be used on rare occasions for filamentous control on the oxidation ditches. During periods of time that hypochlorite is used, effluent monitoring will be done, by collecting a grab sample when hypochlorite is started and then when application is stopped.

2. If the discharge is intermittent rather than continuous, then on the first day of each such intermittent discharge, the Discharger shall monitor and record data for the constituents listed above having sampling frequencies of weekly or more frequent, after which the frequencies of analysis given in the schedule shall apply for the duration of each such intermittent discharge. In no event shall the Discharger be required to monitor and record data more often than twice the frequencies listed in the schedule.

V. WHOLE EFFLUENT TOXICITY TESTING REQUIREMENTS

A. **Acute Toxicity Testing.** The Discharger shall conduct acute toxicity testing to determine whether the effluent is contributing acute toxicity to the receiving water. The Discharger shall meet the following acute toxicity testing requirements:

1. *Monitoring Frequency* – the Discharger shall perform quarterly acute toxicity testing, concurrent with effluent ammonia sampling.

2. *Sample Types* – For static non-renewal and static renewal testing, the samples shall be grab samples and shall be representative of the volume and quality of the discharge. The effluent samples shall be taken at the effluent monitoring location EFF-001.

3. *Test Species* – Test species shall be fathead minnows (*Pimephales promelas*).

4. *Methods* – The acute toxicity testing samples shall be analyzed using EPA-821-R-02-012, Fifth Edition. Temperature, total residual chlorine, and pH shall be recorded at the time of sample collection. No pH adjustment may be made unless approved by the Executive Officer.

5. *Test Failure* – If an acute toxicity test does not meet all test acceptability criteria, as specified in the test method, the Discharger must re-sample and re-test as soon as possible, not to exceed 7 days following notification of test failure.

6. *Ammonia Toxicity* – The acute toxicity testing may be modified to eliminate ammonia-related toxicity until 17 May 2010~~<DATE>~~, at which time the Discharger shall be required to implement the test without modifications to eliminate ammonia toxicity.

B. **Chronic Toxicity Testing**. The Discharger shall conduct three species chronic toxicity testing to determine whether the effluent is contributing chronic toxicity to the receiving water. The Discharger shall meet the following chronic toxicity testing requirements:

1. *Monitoring Frequency* – the Discharger shall perform quarterly three species chronic toxicity testing.

2. *Sample Types* – Effluent samples shall be flow proportional 24-hour composites and shall be representative of the volume and quality of the discharge. The effluent

samples shall be taken at the effluent monitoring location specified in the Monitoring and Reporting Program. The receiving water control shall be a grab sample obtained from the RSW-001 sampling location, as identified in the Monitoring and Reporting Program.

3. *Sample Volumes* – Adequate sample volumes shall be collected to provide renewal water to complete the test in the event that the discharge is intermittent.

4. *Test Species* – Chronic toxicity testing measures sublethal (e.g. reduced growth, reproduction) and/or lethal effects to test organisms exposed to an effluent compared to that of the control organisms. The Discharger shall conduct chronic toxicity tests with:

   - The cladoceran, water flea, *Ceriodaphnia dubia* (survival and reproduction test);
   - The fathead minnow, *Pimephales promelas* (larval survival and growth test); and
   - The green alga, *Selenastrum capricornutum* (growth test).

5. *Methods* – The presence of chronic toxicity shall be estimated as specified in *Short-term Methods for Estimating the Chronic Toxicity of Effluents and Receiving Waters to Freshwater Organisms, Fourth Edition,* EPA/821-R-02-013, October 2002.

6. *Reference Toxicant* – As required by the SIP, all chronic toxicity tests shall be conducted with concurrent testing with a reference toxicant and shall be reported with the chronic toxicity test results.

7. *Dilutions* – The chronic toxicity testing shall be performed using the dilution series identified in Table E-5, below. The receiving water control shall be used as the diluent (unless the receiving water is toxic).

8. *Test Failure* –The Discharger must re-sample and re-test as soon as possible, but no later than fourteen (14) days after receiving notification of a test failure. A test failure is defined as follows:

   a. The reference toxicant test or the effluent test does not meet all test acceptability criteria as specified in the *Short-term Methods for Estimating the Chronic Toxicity of Effluents and Receiving Waters to Freshwater Organisms, Fourth Edition*, EPA/821-R-02-013, October 2002 (Method Manual), and its subsequent amendments or revisions; or

   b. The percent minimum significant difference (PMSD) measured for the test exceeds the upper PMSD bound variability criterion in Table 6 on page 52 of the Method Manual. (A retest is only required in this case if the test results do not exceed the monitoring trigger specified in Special Provisions VI. 2.a.iii.)

Table E-4. Chronic Toxicity Testing Dilution Series

Sample	Dilutions (%)					Controls	
	100	75	50	25	12.5	Receiving Water	Laboratory Water
% Effluent	100	75	50	25	12.5	0	0
% Receiving Water	0	25	50	75	87.5	100	0
% Laboratory Water	0	0	0	0	0	0	100

C. **WET Testing Notification Requirements**. The Discharger shall notify the Regional Water Board within 24-hrs after the receipt of test results exceeding the monitoring trigger during regular or accelerated monitoring, or an exceedance of the acute toxicity effluent limitation.

D. **WET Testing Reporting Requirements**. All toxicity test reports shall include the contracting laboratory's complete report provided to the Discharger and shall be in accordance with the appropriate "Report Preparation and Test Review" sections of the method manuals. At a minimum, whole effluent toxicity monitoring shall be reported as follows:

1. **Chronic WET Reporting.** Regular chronic toxicity monitoring results shall be reported to the Regional Water Board within 30 days following completion of the test, and shall contain, at minimum:

   a. The results expressed in TUc, measured as 100/NOEC, and also measured as $100/LC_{50}$, $100/EC_{25}$, $100/IC_{25}$, and $100/IC_{50}$, as appropriate.

   b. The statistical methods used to calculate endpoints;

   c. The statistical output page, which includes the calculation of the percent minimum significant difference (PMSD);

   d. The dates of sample collection and initiation of each toxicity test; and

   e. The results compared to the numeric toxicity monitoring trigger.

   Additionally, the monthly discharger self-monitoring reports shall contain an updated chronology of chronic toxicity test results expressed in TUc, and organized by test species, type of test (survival, growth or reproduction), and monitoring frequency, i.e., either quarterly, monthly, accelerated, or TRE.

2. **Acute WET Reporting.** Acute toxicity test results shall be submitted with the monthly discharger self-monitoring reports and reported as percent survival.

3. **TRE Reporting.** Reports for Toxicity Reduction Evaluations shall be submitted in accordance with the schedule contained in the Discharger's approved TRE Work Plan.

4. **Quality Assurance (QA).** The Discharger must provide the following information for QA purposes (If applicable):
   a. Results of the applicable reference toxicant data with the statistical output page giving the species, NOEC, LOEC, type of toxicant, dilution water used, concentrations used, PMSD, and dates tested.
   b. The reference toxicant control charts for each endpoint, which include summaries of reference toxicant tests performed by the contracting laboratory.
   c. Any information on deviations or problems encountered and how they were dealt with.

VI. LAND DISCHARGE MONITORING REQUIREMENTS – NOT APPLICABLE

VII. RECLAMATION MONITORING REQUIREMENTS – NOT APPLICABLE

VIII. RECEIVING WATER MONITORING REQUIREMENTS – SURFACE WATER AND GROUNDWATER

A. Monitoring Location RSW-001 and RSW-002

1. The Discharger shall monitor Tule Canal at RSW-001 and RSW-002 as follows:

Table E-5~~a~~. Receiving Water Monitoring Requirements [1]

Parameter	Units	Sample Type	Minimum Sampling Frequency	Required Analytical Test Method
Dissolved Oxygen	mg/L	Grab	1/week	
pH	Standard Units	Grab	1/week	
Temperature	°F (°C)	Grab	1/week	
Electrical Conductivity @ 25°C	µmhos/cm	Grab	1/week	
Turbidity	NTU	Grab	1/month	
Total Coliform Organisms	MPN/100mL	Grab	1/month	
Hardness	mg/L	Grab	1/month	
Radionuclides	PCi/L	Grab	1/year	

[1]. Due to flooded conditions in the Yolo Bypass during wet weather periods, it can be unsafe to obtain samples at RSW-001 and RSW-002. ~~—~~When the Discharger is unable to sample RSW-001 or RSW-002, it should be so noted on the discharge monitoring report.

B. Groundwater Monitoring

1. The Discharger shall monitor groundwater at monitoring groundwater as follows:

Table E-6. Groundwater Monitoring Requirements[1]

Parameter	Units	Sample Type	Sampling Frequency	Required Analytical Test Method
Depth to Groundwater	Feet	Measurement	1/Quarter	
Groundwater Elevation[2]	feet/100	Measurement	1/Quarter	
pH	pH units		1/Quarter 1/Year[4]	
Temperature	°C		1/Quarter 1/Year[4]	
Nitrate and Nitrite as N	mg/L	Grab	1/Quarter 1/Year[4]	
Total Kjeldahl Nitrogen	mg/L		1/Quarter 1/Year[4]	
Chloride, Sulfate, Bromide	mg/L		1/Quarter 1/Year[4]	
Total Dissolved Solids	mg/L		1/Quarter 1/Year[4]	
Fixed Dissolved Solids	mg/L		1/Quarter 1/Year[4]	
Electrical Conductivity @ 25°C	umhos/cm	Grab	1/Quarter 1/Year[4]	
$\delta^{18}O$ and $\delta^{2}H$	Permit		1/Quarter 1/Year[4]	
Dissolved B, Fe, Mn, Na	mg/L		1/Quarter 1/Year[4]	
Standard Minerals[3]	mg/L		1/Year	
Total Coliform Organisms	MPN/100 ml	Grab	1/Quarter 1/Year[4]	

[1]Groundwater Monitoring Requirements recommended in the City of Woodland Hydrogeologic Evaluation Report, July 2008.
[2]Groundwater elevation shall be determined based on depth-to-water measurements from surveyed measuring point elevation on the well (north quadrant of the PVC well casing).
[3]Standard minerals include at least the following compounds: boron, calcium, iron, magnesium, manganese, potassium, sodium, chloride, sulfate, total alkalinity (including alkalinity series), and hardness.
[4]Quarterly analysis at monitoring wells MW-2, MW-5, MW-6, and MW-11. Annual analysis at background monitoring wells.

IX. OTHER MONITORING REQUIREMENTS

A. Ultraviolet Disinfection System

1. Monitoring Location UVS-001

1. The Discharger shall monitor UVS-001 as follows:

Table E-7. Ultraviolet Disinfection System Monitoring Requirements

Parameter	Units	Sample Type	Minimum Sampling Frequency
Flow rate	mgd	Meter	Continuous
Turbidity[1]	NTU	Meter	Continuous
Number of UV banks in operation	Number	Meter	Continuous
UV Transmittance	Percent (%)	Meter	Continuous

Parameter	Units	Sample Type	Minimum Sampling Frequency
UV Power Setting	Percent (%)	Meter	Continuous
UV Dose[2]	MW-sec/cm^2	Calculated	Continuous

[1] Report daily average turbidity and maximum. If the influent exceeds 10 NTU, collect a sample for total coliform and report the duration of the turbidity exceedance.

[2] Report daily minimum UV dose, daily average UV dose, and weekly average UV dose. For the daily minimum UV dose, also report associated number of banks, gallons per minute per lamp, power settings, and UV transmittance used in the calculation. If effluent discharge has received less than the minimum UV dose and is not diverted from discharging to Tule Canal, report the duration and dose calculation variables associated with each incident.

B. Biosolids

1. Monitoring Location BIO-001

1. A composite sample of sludge shall be collected annually at Monitoring Location BIO-001 in accordance with EPA's POTW Sludge Sampling and Analysis Guidance Document, August 1989, and tested for priority pollutants listed in 40 CFR section 122 Appendix D, Tables II and III (excluding total phenols).

2. A composite sample of sludge shall be collected when sludge is removed from the ponds for disposal in accordance with USEPA's POTW Sludge Sampling and Analysis Guidance Document, August 1989, and tested for the metals listed in Title 22.

3. Sampling records shall be retained for a minimum of **five years**. A log shall be kept of sludge quantities generated and of handling and disposal activities. The frequency of entries is discretionary; however, the log should be complete enough to serve as a basis for part of the annual report.

4. Upon removal of sludge, the Discharger shall submit characterization of sludge quality, including sludge percent solids and quantitative results of chemical analysis for the priority pollutants listed in 40 CFR 122 Appendix D, Tables II and III (excluding total phenols). Suggested methods for analysis of sludge are provided in USEPA publications titled "Test Methods for Evaluating Solid Waste: Physical/Chemical Methods" and "Test Methods for Organic Chemical Analysis of Municipal and Industrial Wastewater". Recommended analytical holding times for sludge samples should reflect those specified in 40 CFR 136.6.3(e). Other guidance is available in USEPA's POTW Sludge Sampling and Analysis Guidance Document, August 1989.

C. Municipal Water Supply

1. Monitoring Location SPL-001

The Discharger shall monitor the Municipal Water Supply at SPL-001 as follows. A sampling station shall be established where a representative sample of the municipal water supply can be obtained. Municipal water supply samples shall be collected at approximately the same time as effluent samples.

Table E-8. Municipal Water Supply Monitoring Requirements

Parameter	Units	Sample Type	Minimum Sampling Frequency	Required Analytical Test Method
Total Dissolved Solids	mg/L	Grab	1/year	
Electrical Conductivity @ 25°C[1]	µmhos/cm	Grab	1/year	
Selenium	µg/L	Grab	1/year	
Boron	µg/L	Grab	1/year	
Mercury	µg/L	Grab	1/year	

[1] If the water supply is from more than one source, the EC shall be reported as a weighted average and include copies of supporting calculations.

D. Storage Ponds Monitoring

1. **Monitoring Location – Each storage pond.**

Table E-9. Storage Ponds Monitoring Requirements

Parameter	Units	Sample Type	Minimum Sampling Frequency	Required Analytical Test Method
Freeboard	Feet, inches	--	1/month	
Electrical Conductivity @ 25°C	umhos/cm	Grab	1/month	
Color		--	1/month	
Odor		--	1/month	
Levee Condition		--	1/month	

X. REPORTING REQUIREMENTS

A. General Monitoring and Reporting Requirements

1. The Discharger shall comply with all Standard Provisions (Attachment D) related to monitoring, reporting, and recordkeeping.

2. Upon written request of the Regional Water Board, the Discharger shall submit a summary monitoring report. The report shall contain both tabular and graphical summaries of the monitoring data obtained during the previous year(s).

3. **Compliance Time Schedules.** For compliance time schedules included in the Order, the Discharger shall submit to the Regional Water Board, on or before each compliance due date, the specified document or a written report detailing compliance or noncompliance with the specific date and task. If noncompliance is reported, the Discharger shall state the reasons for noncompliance and include an estimate of the date when the Discharger will be in compliance. The Discharger shall notify the Regional Water Board by letter when it returns to compliance with the compliance time schedule.

4. The Discharger shall report to the Regional Water Board any toxic chemical release data it reports to the State Emergency Response Commission within 15 days of

reporting the data to the Commission pursuant to section 313 of the "Emergency Planning and Community Right to Know Act of 1986.

5. **Reporting Protocols.** The Discharger shall report with each sample result the applicable Reporting Level (RL) and the current Method Detection Limit (MDL), as determined by the procedure in Part 136.

   The Discharger shall report the results of analytical determinations for the presence of chemical constituents in a sample using the following reporting protocols:

   a. Sample results greater than or equal to the RL shall be reported as measured by the laboratory (i.e., the measured chemical concentration in the sample).

   b. Sample results less than the RL, but greater than or equal to the laboratory's MDL, shall be reported as "Detected, but Not Quantified," or DNQ. The estimated chemical concentration of the sample shall also be reported.

      For the purposes of data collection, the laboratory shall write the estimated chemical concentration next to DNQ as well as the words "Estimated Concentration" (may be shortened to "Est. Conc."). The laboratory may, if such information is available, include numerical estimates of the data quality for the reported result. Numerical estimates of data quality may be percent accuracy (± a percentage of the reported value), numerical ranges (low to high), or any other means considered appropriate by the laboratory.

   c. Sample results less than the laboratory's MDL shall be reported as "Not Detected," or ND.

   d. Dischargers are to instruct laboratories to establish calibration standards so that the ML value (or its equivalent if there is differential treatment of samples relative to calibration standards) is the lowest calibration standard. At no time is the Discharger to use analytical data derived from *extrapolation* beyond the lowest point of the calibration curve.

6. **Multiple Sample Data.** When determining compliance with an AMEL , AWEL, or MDEL for priority pollutants and more than one sample result is available, the Discharger shall compute the arithmetic mean unless the data set contains one or more reported determinations of "Detected, but Not Quantified" (DNQ) or "Not Detected" (ND). In those cases, the Discharger shall compute the median in place of the arithmetic mean in accordance with the following procedure:

   a. The data set shall be ranked from low to high, ranking the reported ND determinations lowest, DNQ determinations next, followed by quantified values (if any). The order of the individual ND or DNQ determinations is unimportant.

   b. The median value of the data set shall be determined. If the data set has an odd number of data points, then the median is the middle value. If the data set has an even number of data points, then the median is the average of the two values around the middle unless one or both of the points are ND or DNQ, in which case

the median value shall be the lower of the two data points where DNQ is lower than a value and ND is lower than DNQ.

B. Self Monitoring Reports (SMRs)

1. At any time during the term of this permit, the State or Regional Water Board may notify the Discharger to electronically submit Self-Monitoring Reports (SMRs) using the State Water Board's California Integrated Water Quality System (CIWQS) Program Web site (http://www.waterboards.ca.gov/ciwqs/index.html). Until such notification is given, the Discharger shall submit hard copy SMRs. The CIWQS Web site will provide additional directions for SMR submittal in the event there will be service interruption for electronic submittal.

2. Monitoring results shall be submitted to the Regional Water Board by the **first day** of the second month following sample collection. Quarterly and annual monitoring results shall be submitted by the **first day of the second month following each calendar quarter, semi-annual period, and year**, respectively.

3. In reporting the monitoring data, the Discharger shall arrange the data in tabular form so that the date, the constituents, and the concentrations are readily discernible. The data shall be summarized in such a manner to illustrate clearly whether the discharge complies with waste discharge requirements. The highest daily maximum for the month, monthly and weekly averages, and medians, and removal efficiencies (%) for BOD and Total Suspended Solids, shall be determined and recorded as needed to demonstrate compliance.

4. With the exception of flow, all constituents monitored on a continuous basis (metered), shall be reported as daily maximums, daily minimums, and daily averages; flow shall be reported as the total volume discharged per day for each day of discharge.

5. If the Discharger monitors any pollutant at the locations designated herein more frequently than is required by this Order, the results of such monitoring shall be included in the calculation and reporting of the values required in the discharge monitoring report form. Such increased frequency shall be indicated on the discharge monitoring report form.

6. A letter transmitting the self-monitoring reports shall accompany each report. Such a letter shall include a discussion of requirement violations found during the reporting period, and actions taken or planned for correcting noted violations, such as operation or facility modifications. If the Discharger has previously submitted a report describing corrective actions and/or a time schedule for implementing the corrective actions, reference to the previous correspondence will be satisfactory. The transmittal letter shall contain the penalty of perjury statement by the Discharger, or the Discharger's authorized agent, as described in the Standard Provisions.

7. SMRs must be submitted to the Regional Water Board, signed and certified as required by the Standard Provisions (Attachment D), to the address listed below:

   Regional Water Quality Control Board
   Central Valley Region
   11020 Sun Center Dr., Suite #200
   Rancho Cordova, CA 95670-6114

8. Monitoring periods and reporting for all required monitoring shall be completed according to the following schedule:

Table E-10. Monitoring Periods and Reporting Schedule

Sampling Frequency	Monitoring Period Begins On…	Monitoring Period	SMR Due Date
Continuous	**Permit effective date**	**All**	**First day of second calendar month following month of sampling**
Daily	**Permit effective date**	**(Midnight through 11:59 PM) or any 24-hour period that reasonably represents a calendar day for purposes of sampling.**	**First day of second calendar month following month of sampling**
Weekly	**Sunday following permit effective date or on permit effective date if on a Sunday**	**Sunday through Saturday**	**First day of second calendar month following month of sampling**
Monthly	**First day of calendar month following permit effective date or on permit effective date if that date is first day of the month**	**1st day of calendar month through last day of calendar month**	**First day of second calendar month following month of sampling**
Quarterly	**Closest of January 1, April 1, July 1, or October 1 following (or on) permit effective date**	**January 1 through March 31 April 1 through June 30 July 1 through September 30 October 1 through December 31**	**May 1 August 1 November 1 February 1**
Annually	**January 1 following (or on) permit effective date**	**January 1 through December 31**	**February 1**

C. Discharge Monitoring Reports (DMRs)

1. As described in Section X.B.1 above, at any time during the term of this permit, the State or Regional Water Board may notify the Discharger to electronically submit SMRs that will satisfy federal requirements for submittal of Discharge Monitoring Reports (DMRs). Until such notification is given, the Discharger shall submit DMRs in accordance with the requirements described below.

2. DMRs must be signed and certified as required by the standard provisions (Attachment D). The Discharger shall submit the original DMR and one copy of the DMR to the address listed below:

Standard Mail	FedEx/UPS/ Other Private Carriers
State Water Resources Control Board Division of Water Quality c/o DMR Processing Center PO Box 100 Sacramento, CA 95812-1000	State Water Resources Control Board Division of Water Quality c/o DMR Processing Center 1001 I Street, 15th Floor Sacramento, CA 95814

3. All discharge monitoring results must be reported on the official USEPA pre-printed DMR forms (EPA Form 3320-1). Forms that are self-generated cannot be accepted unless they follow the exact same format as EPA form 3320-1.

D. Other Reports

1. **Progress Reports.** As specified in the compliance time schedules required in Special Provisions VI, progress reports shall be submitted in accordance with the following reporting requirements. At minimum, the progress reports shall include a discussion of the status of final compliance, whether the Discharger is on schedule to meet the final compliance date, and the remaining tasks to meet the final compliance date.

Table E-11. Reporting Requirements for Special Provisions Progress Reports

Special Provision	Reporting Requirements
Pollution Prevention Plan for ammonia and selenium (Special Provisions VI.C.7.a.)	**1 December**, annually, after approval of work plan
Compliance Schedules for Final Effluent Limitations for ammonia and selenium, compliance with final effluent limitations. (Special Provisions VI.C.7.a.)	**1 June**, annually, until final compliance
Salinity Minimization Plan	**1 December**

2. Within **60 days** of permit adoption, the Discharger shall submit a report outlining minimum levels, method detection limits, and analytical methods for approval, with a goal to achieve detection levels below applicable water quality criteria. At a

minimum, the Discharger shall comply with the monitoring requirements for CTR constituents as outlined in Section 2.3 and 2.4 of the *Policy for Implementation of Toxics Standards for Inland Surface Waters, Enclosed Bays, and Estuaries of California*, adopted 2 March 2000 by the State Water Resources Control Board. All peaks identified by analytical methods shall be reported.

3. The Discharger's sanitary sewer system collects wastewater using sewers, pipes, pumps, and/or other conveyance systems and directs the raw sewage to the wastewater treatment plant. A "sanitary sewer overflow" is defined as a discharge to ground or surface water from the sanitary sewer system at any point upstream of the wastewater treatment plant. Sanitary sewer overflows are prohibited by this Order. All violations must be reported as required in Standard Provisions. Facilities (such as wet wells, regulated impoundments, tanks, highlines, *etc*.) may be part of a sanitary sewer system and discharges to these facilities are not considered sanitary sewer overflows, provided that the waste is fully contained within these temporary storage facilities.

4. **Annual Operations Report**. By **30 January** of each year, the Discharger shall submit a written report to the Executive Officer containing the following:

   a. The names, certificate grades, and general responsibilities of all persons employed at the Facility.

   b. The names and telephone numbers of persons to contact regarding the plant for emergency and routine situations.

   c. A statement certifying when the flow meter(s) and other monitoring instruments and devices were last calibrated, including identification of who performed the calibration.

   d. A statement certifying whether the current operation and maintenance manual, and contingency plan, reflect the wastewater treatment plant as currently constructed and operated, and the dates when these documents were last revised and last reviewed for adequacy.

   e. The Discharger may also be requested to submit an annual report to the Regional Water Board with both tabular and graphical summaries of the monitoring data obtained during the previous year. Any such request shall be made in writing. The report shall discuss the compliance record. If violations have occurred, the report shall also discuss the corrective actions taken and planned to bring the discharge into full compliance with the waste discharge requirements.

   f. The annual operations report shall also include a progress report for the Discharger's potable water supply project. The progress report should include a summary of activities completed over the last year and anticipated schedule for completion.

5. **Annual Pretreatment Reporting Requirements.** The Discharger shall submit annually a report to the Regional Water Board, with copies to US EPA Region 9 and the State Water Board, describing the Discharger's pretreatment activities over the previous 12 months. In the event that the Discharger is not in compliance with any conditions or requirements of this Order, including noncompliance with pretreatment audit/compliance inspection requirements, then the Discharger shall also include the reasons for noncompliance and state how and when the Discharger shall comply with such conditions and requirements.

   An annual report shall be submitted by **28 February** and include at least the following items:

   a. A summary of analytical results from representative, flow proportioned, 24-hour composite sampling of the POTW's influent and effluent for those pollutants EPA has identified under Section 307(a) of the CWA which are known or suspected to be discharged by industrial users.

      Sludge shall be sampled during the same 24-hour period and analyzed for the same pollutants as the influent and effluent sampling and analysis. The sludge analyzed shall be a composite sample of a minimum of 12 discrete samples taken at equal time intervals over the 24-hour period. Wastewater and sludge sampling and analysis shall be performed at least annually. The discharger shall also provide any influent, effluent or sludge monitoring data for nonpriority pollutants which may be causing or contributing to Interference, Pass-Through or adversely impacting sludge quality. Sampling and analysis shall be performed in accordance with the techniques prescribed in 40 CFR 136 and amendments thereto.

   b. A discussion of Upset, Interference, or Pass-Through incidents, if any, at the treatment plant, which the Discharger knows or suspects were caused by industrial users of the POTW. The discussion shall include the reasons why the incidents occurred, the corrective actions taken and, if known, the name and address of, the industrial user(s) responsible. The discussion shall also include a review of the applicable pollutant limitations to determine whether any additional limitations, or changes to existing requirements, may be necessary to prevent Pass-Through, Interference, or noncompliance with sludge disposal requirements.

   c. The cumulative number of industrial users that the Discharger has notified regarding Baseline Monitoring Reports and the cumulative number of industrial user responses.

   d. An updated list of the Discharger's industrial users including their names and addresses, or a list of deletions and additions keyed to a previously submitted list. The Discharger shall provide a brief explanation for each deletion. The list shall identify the industrial users subject to federal categorical standards by specifying which set(s) of standards are applicable. The list shall indicate which

categorical industries, or specific pollutants from each industry, are subject to local limitations that are more stringent than the federal categorical standards. The Discharger shall also list the noncategorical industrial users that are subject only to local discharge limitations. The Discharger shall characterize the compliance status through the year of record of each industrial user by employing the following descriptions:

i. complied with baseline monitoring report requirements (where applicable);
ii. consistently achieved compliance;
iii. inconsistently achieved compliance;
iv. significantly violated applicable pretreatment requirements as defined by 40 CFR 403.8(f)(2)(vii);
v. complied with schedule to achieve compliance (include the date final compliance is required);
vi. did not achieve compliance and not on a compliance schedule; and
vii. compliance status unknown.

A report describing the compliance status of each industrial user characterized by the descriptions in items iii. through vii. above shall be submitted for each calendar quarter **within 21 days of the end of the quarter**. The report shall identify the specific compliance status of each such industrial user and shall also identify the compliance status of the POTW with regards to audit/pretreatment compliance inspection requirements. If none of the aforementioned conditions exist, at a minimum, a letter indicating that all industries are in compliance and no violations or changes to the pretreatment program have occurred during the quarter must be submitted. The information required in the fourth quarter report shall be included as part of the annual report. This quarterly reporting requirement shall commence upon issuance of this Order.

e. A summary of the inspection and sampling activities conducted by the Discharger during the past year to gather information and data regarding the industrial users. The summary shall include:

i. the names and addresses of the industrial users subjected to surveillance and an explanation of whether they were inspected, sampled, or both and the frequency of these activities at each user; and
ii. the conclusions or results from the inspection or sampling of each industrial user.

f. A summary of the compliance and enforcement activities during the past year. The summary shall include the names and addresses of the industrial users affected by the following actions:

i. Warning letters or notices of violation regarding the industrial users' apparent noncompliance with federal categorical standards or local discharge limitations. For each industrial user, identify whether the apparent violation concerned the federal categorical standards or local discharge limitations.

ii. Administrative orders regarding the industrial users noncompliance with federal categorical standards or local discharge limitations. For each industrial user, identify whether the violation concerned the federal categorical standards or local discharge limitations.
iii. Civil actions regarding the industrial users' noncompliance with federal categorical standards or local discharge limitations. For each industrial user, identify whether the violation concerned the federal categorical standards or local discharge limitations.
iv. Criminal actions regarding the industrial users noncompliance with federal categorical standards or local discharge limitations. For each industrial user, identify whether the violation concerned the federal categorical standards or local discharge limitations.
v. Assessment of monetary penalties. For each industrial user identify the amount of the penalties.
vi. Restriction of flow to the POTW.
vii. Disconnection from discharge to the POTW.

g. A description of any significant changes in operating the pretreatment program which differ from the information in the Discharger's approved Pretreatment Program including, but not limited to, changes concerning: the program's administrative structure, local industrial discharge limitations, monitoring program or monitoring frequencies, legal authority or enforcement policy, funding mechanisms, resource requirements, or staffing levels.

h. A summary of the annual pretreatment budget, including the cost of pretreatment program functions and equipment purchases.

Duplicate signed copies of these Pretreatment Program reports shall be submitted to the Regional Water Board and the:

State Water Resources Control Board
Division of Water Quality
P.O. Box 944213
Sacramento, CA 94244-2130

and the

Regional Administrator
U.S. Environmental Protection Agency W-5
75 Hawthorne Street
San Francisco, CA 94105

ATTACHMENT F – FACT SHEET

Table of Contents

Attachment F – Fact Sheet F-3
I. Permit Information F-3
II. Facility Description F-4
A. Description of Wastewater and Biosolids Treatment or Controls F-4
B. Discharge Points and Receiving Waters F-5
C. Summary of Existing Requirements and Self-Monitoring Report (SMR) Data F-6
D. Compliance Summary F-7
E. Planned Changes F-7
III. Applicable Plans, Policies, and Regulations F-7
A. Legal Authority F-7
B. California Environmental Quality Act (CEQA) F-7
C. State and Federal Regulations, Policies, and Plans F-7
D. Impaired Water Bodies on CWA 303(d) List – Not Applicable F-10
E. Other Plans, Polices and Regulations F-10
IV. Rationale For Effluent Limitations and Discharge Specifications F-10
A. Discharge Prohibitions F-11
B. Technology-Based Effluent Limitations F-11
1. Scope and Authority F-11
2. Applicable Technology-Based Effluent Limitations F-12
C. Water Quality-Based Effluent Limitations (WQBELs) F-13
1. Scope and Authority F-13
2. Applicable Beneficial Uses and Water Quality Criteria and Objectives F-13
3. Determining the Need for WQBELs F-14
4. WQBEL Calculations F-24
5. Whole Effluent Toxicity (WET) F-26
D. Final Effluent Limitations F-27
1. Mass-based Effluent Limitations. F-27
2. Averaging Periods for Effluent Limitations. F-28
3. Satisfaction of Anti-Backsliding Requirements. F-28
4. Satisfaction of Antidegradation Policy F-29
E. Interim Effluent Limitations F-33
F. Land Discharge Specifications – Not Applicable F-35
G. Reclamation Specifications – Not Applicable F-35
V. Rationale for Receiving Water Limitations F-35
A. Surface Water F-35
B. Groundwater F-38
VI. Rationale for Monitoring and Reporting Requirements F-39
A. Influent Monitoring F-39
B. Effluent Monitoring F-39
C. Whole Effluent Toxicity Testing Requirements F-39
D. Receiving Water Monitoring F-40
1. Surface Water F-40
2. Groundwater F-40

E. Other Monitoring Requirements F-41
VII. Rationale for Provisions F-41
A. Standard Provisions F-41
B. Special Provisions F-42
1. Reopener Provisions F-42
2. Special Studies and Additional Monitoring Requirements F-42
3. Best Management Practices and Pollution Prevention F-46
4. Construction, Operation, and Maintenance Specifications F-47
5. Special Provisions for Municipal Facilities (POTWs Only) F-48
6. Other Special Provisions F-48
7. Compliance Schedules F-48
VIII. Public Participation F-49
A. Notification of Interested Parties F-49
B. Written Comments F-49
C. Public Hearing F-49
D. Waste Discharge Requirements Petitions F-50
E. Information and Copying F-50
F. Register of Interested Persons F-50
G. Additional Information F-50

List of Tables

Table F-1. Facility Information F-3
Table F-2a. Historic Effluent Limitations and Monitoring Data (From 1 April 2003 – To 30 April 2006) F-6
Table F-2b. Historic Effluent Limitations and Monitoring Data (After 30 April 2006) F-6
Table F-3. Summary of Technology-based Effluent Limitations F-13
Table F-4. Salinity Water Quality Criteria/Objectives F-20
Table F-5. WQBEL Calculations for Ammonia F-25
Table F-6. WQBEL Calculations for Selenium F-25
Table F-7. Summary of Water Quality-based Effluent Limitations F-26
Table F-8. Summary of Final Effluent Limitations F-33
Table F-9. Interim Effluent Limitation Calculation Summary F-34

ATTACHMENT F – FACT SHEET

As described in section II of this Order, this Fact Sheet includes the legal requirements and technical rationale that serve as the basis for the requirements of this Order.

This Order has been prepared under a standardized format to accommodate a broad range of discharge requirements for Dischargers in California. Only those sections or subsections of this Order that are specifically identified as "not applicable" have been determined not to apply to this Discharger. Sections or subsections of this Order not specifically identified as "not applicable" are fully applicable to this Discharger.

I. PERMIT INFORMATION

The following table summarizes administrative information related to the facility.

Table F-1. Facility Information

WDID	5A570105001
Discharger	City of Woodland
Name of Facility	City of Woodland Water Pollution Control Facility
Facility Address	42929 County Road 24
	Woodland, CA, 95776
	Yolo County
Facility Contact, Title and Phone	Mark Hierholzer, Water Pollution Control Facility (WPCF) Superintendent,(530)-406-5112
Authorized Person to Sign and Submit Reports	Greg Meyer, Public Works Director, (530)-661-5953
Mailing Address	300 First Street, Woodland, CA, 95695
Billing Address	300 First Street, Woodland, CA, 95695
Type of Facility	POTW
Major or Minor Facility	Major
Threat to Water Quality	1
Complexity	A
Pretreatment Program	Y
Reclamation Requirements	N/A
Facility Permitted Flow	10.4 million gallons per day
Facility Design Flow	10.4 million gallons per day
Watershed	Sacramento Delta Hydrologic Unit
Receiving Water	Tule Canal
Receiving Water Type	Inland Surface Water

A. City of Woodland (hereinafter Discharger) is the owner and operator of City of Woodland Water Pollution Control Facility (hereinafter Facility), a Publicly Owned Treatment Works Facility.

For the purposes of this Order, references to the "discharger" or "permittee" in applicable federal and state laws, regulations, plans, or policy are held to be equivalent to references to the Discharger herein.

B. The Facility discharges wastewater to Tule Canal, a water of the United States, and is currently regulated by Order No. R5-2003-0031-R01 which was adopted on 16 September 2005 and expired on 13 March 2008. The terms and conditions of the current Order have been automatically continued and remain in effect until new Waste Discharge Requirements (WDRs) and National Pollutant Discharge Elimination System (NPDES) permit are adopted pursuant to this Order.

C. The Discharger filed a report of waste discharge and submitted an application for renewal of its WDRs and NPDES permit on 28 September 2007.

II. FACILITY DESCRIPTION

The Discharger provides sewerage service for the community of City of Woodland. The WWTP design daily average flow capacity is 10.4 mgd.

A. Description of Wastewater and Biosolids Treatment or Controls

1. Headworks

Four enclosed screw pumps lift the wastewater to a height sufficient for gravity flow. A 36 inch Parshall flume measures the influent flow rate. Two aerated grit chambers remove smaller inorganic materials (such as sand and rocks). Automatic control gates regulate the direction and quantity of flow to the grit chambers, while peak flows and overflows are directed to the treatment ponds. A constant water level gate further controls overflow to the treatment ponds. The plant flow rate is measured by the depth of the flow over flumes located downstream from the constant water level gate. Diversion ~~Bypass~~ to treatment ponds may be measured by subtracting the plant flow rate from the influent flow rate.

Screenings are washed and compacted before being sent to a landfill. Grit is land filled.

2. Secondary Treatment

Splitter box "A" splits the wastewater flow between up to four oxidation ditches. The oxidation ditches provide mechanical aeration and grow bacteria that assimilate the organic material within the wastewater. The system is operated so that the bacteria convert ammonia in the water to nitrate (a process termed "nitrification"). Given the average organic load of the wastewater entering the oxidation ditches and re-aeration capacity, each ditch has a treatment capacity of 2.6 MGD. Detention time for each oxidation ditch is about 19.5 hours based on a flow rate of 10.4 MGD. Flow may either be directed to an adjacent ditch or fed into Splitter box "B".'

Splitter box "B" collects effluent from one or more of the oxidation ditches and splits that effluent to flow to any combination of two 92-foot and two 130-foot (center feed) secondary clarifiers. At splitter box "B" polymer is added to enhance floc formation in the secondary clarifiers. Depth of each 92-foot clarifier is 12 feet, and the depth of each 130-foot clarifier is 17 feet. At current flows, all four clarifiers are used. Clarifier weirs and launderers are covered to minimize algae growth. Settled sludge is siphoned to the return sludge pump station, and there, is either pumped upstream of splitter box "A", or pumped to the treatment ponds as waste sludge. Both return and waste sludge flows are metered. Effluent from the clarifiers is combined and directed to a tertiary pump station to lift secondary effluent up to the cloth media filters.

3. Tertiary Filtration

   In 2006 and 2007 tertiary filtration was constructed at the WPCF. The system consists of cloth media filters in stainless steel tanks mounted on concrete slabs with backwash pumps and appurtenant pipes and valves. The WPCF has four filtration modules. Filtered effluent generally has a turbidity of less than 2 NTUs and TSS and BOD levels of less than 10 mg/L.

4. Ultraviolet Disinfection

   In 2006 and 2007, the WPCF also replaced its chlorination disinfection system with an ultraviolet (UV) light disinfection system. The facility consists of lamp modules mounted in concrete channels, with appurtenant flow-control flumes and gates, and an overhead crane-rail hoist for use during removal of lam~~e~~p modules. Two channels are provided. The system was designed to comply with DHS Title 22 requirements for UV systems.

5. Sludge Handling

   Sludge settled in the secondary clarifiers is siphoned to the return sludge pump station (RSPS). At the RSPS, the sludge is either recycled within the system as return activated sludge (RAS) or wasted from the system as waste activated sludge (WAS). RAS is pumped from the RSPS to upstream of splitter box "A". RAS flow rate is metered. WAS is pumped to the treatment ponds. WAS flow rate is metered. Onsite treatment ponds are of sufficient capacity to retain waste sludge for long-term treatment.

B. Discharge Points and Receiving Waters

1. The Facility is located in Section 2, T9N, R2E, MDB&M, as shown in Attachment B (Figure B-1), a part of this Order.

2. Treated municipal wastewater is discharged at Discharge Point 001 to Tule Canal, a water of the United States at a point Latitude 38º, 40', 5~~1~~4" N and longitude ~~-~~121 º, 38', ~~38~~42" W.

C. Summary of Existing Requirements and Self-Monitoring Report (SMR) Data

Effluent limitations/Discharge Specifications contained in the existing Order for discharges from Discharge Point 001 (Monitoring Location EFF-001) and representative monitoring data from the term of the previous Order are as follows:

Table F-2a. Historic Effluent Limitations and Monitoring Data (From 1 April 2003 – To 30 April 2006)

Parameter	Units	Effluent Limitation			Monitoring Data (From 1 April 2003 – To 30 April 2006)		
		Average Monthly	Average Weekly	Maximum Daily	Highest Average Monthly Discharge	Highest Average Weekly Discharge	Highest Daily Discharge
BOD 5-day @ 20 °C	mg/L	30	45	90	--	--	5
Total Suspended Solids	mg/L	30	45	90	--	--	8.8
Total Coliform Organisms	MPN/ 100 mL	--	--	500	--	--	21
Settable Solids	ml/L	0.1	--	0.2	--	--	<0.1
Mercury	µg/L	0.051	--	--	0.063	--	--
Oil and Grease	mg/L	10	--	15	--	--	8,5
Iron	µg/L	498	--	--	220	--	--
Dibromochlor omethane	µg/L	34	--	68	--	--	27
Aluminum	µg/L	71	--	140	--	--	79.5
Chlorine Residual	mg/L	--	0.01	0.02	--	--	0

Table F-2b. Historic Effluent Limitations and Monitoring Data (After 30 April 2006)

Parameter	Units	Effluent Limitation			Monitoring Data (After 30 April 2006)		
		Average Monthly	Averag e Weekly	Maximum Daily	Highest Average Monthly Discharge	Highest Average Weekly Discharge	Highest Daily Discharge
BOD 5-day @ 20 °C	mg/L	10	15	20	--	--	3.3
Total Suspended Solids	mg/L	10	15	20	--	--	4.1
Total Coliform Organisms	MPN/100 mL	--	2.2	--	--	--	30

Parameter	Units	Effluent Limitation			Monitoring Data (After 30 April 2006)		
		Average Monthly	Average Weekly	Maximum Daily	Highest Average Monthly Discharge	Highest Average Weekly Discharge	Highest Daily Discharge
Turbidity	NTU	--	--	5.0			2.2
Settable Solids	ml/L	0.1	--	0.2	--	--	<0.1
Mercury	µg/L	0.051	--	--	0.014	--	--
Oil and Grease	mg/L	10	--	15	--	--	1.3
Iron	µg/L	498	--	--	220	--	--
Dibromo-chloromethane	µg/L	34	--	68	--	--	28
Aluminum	µg/L	71	--	140	--	--	63
Chlorine Residual	mg/L	--	0.01	0.02	--	--	0

D. Compliance Summary – Not Applicable

E. Planned Changes – Not Applicable

III. APPLICABLE PLANS, POLICIES, AND REGULATIONS

The requirements contained in this Order are based on the applicable plans, policies, and regulations identified in section II of the Limitations and Discharge Requirements (Findings). This section provides supplemental information, where appropriate, for the plans, policies, and regulations relevant to the discharge.

A. Legal Authority

See Limitations and Discharge Requirements - Findings, Section II.C.

B. California Environmental Quality Act (CEQA)

See Limitations and Discharge Requirements - Findings, Section II.E.

C. State and Federal Regulations, Policies, and Plans

1. **Water Quality Control Plans**. The Regional Water Board adopted a *Water Quality Control Plan, Fourth Edition (Revised August 2006), for the Sacramento and San Joaquin River Basins* (Basin Plan) that designates beneficial uses, establishes water quality objectives, and contains implementation programs and policies to achieve those objectives for all waters addressed through the plan. In addition, State Water Board Resolution No. 88-63 requires that, with certain exceptions, the Regional Water Board assign the municipal and domestic supply use to water bodies that do not have beneficial uses listed in the Basin Plan. The beneficial uses of the Tule Canal downstream of the discharge are agricultural supply, including stock watering; water contact recreation; non-contact water recreation, including aesthetic enjoyment; commercial and sport fishing; aquaculture; warm freshwater habitat;

potential cold freshwater habitat; warm migration of aquatic organisms; cold migration of aquatic organisms; warm spawning, reproduction, and/or early development; and wildlife habitat.

The Basin Plan on page II-1.00 states: "*Protection and enhancement of existing and potential beneficial uses are primary goals of water quality planning…*" and with respect to disposal of wastewaters states that "...*disposal of wastewaters is [not] a prohibited use of waters of the State; it is merely a use which cannot be satisfied to the detriment of beneficial uses.*"

The federal CWA section 101(a)(2), states: "*it is the national goal that wherever attainable, an interim goal of water quality which provides for the protection and propagation of fish, shellfish, and wildlife, and for recreation in and on the water be achieved by July 1, 1983.*" Federal Regulations, developed to implement the requirements of the CWA, create a rebuttable presumption that all waters be designated as fishable and swimmable. Federal Regulations, 40 CFR sections 131.2 and 131.10, require that all waters of the State regulated to protect the beneficial uses of public water supply, protection and propagation of fish, shell fish and wildlife, recreation in and on the water, agricultural, industrial and other purposes including navigation. Section 131.3(e), 40 CFR, defines existing beneficial uses as those uses actually attained after November 28, 1975, whether or not they are included in the water quality standards. Federal Regulation, 40 CFR section 131.10 requires that uses be obtained by implementing effluent limitations, requires that all downstream uses be protected and states that in no case shall a state adopt waste transport or waste assimilation as a beneficial use for any waters of the United States.

This Order contains Effluent Limitations requiring a tertiary level of treatment, or equivalent, which is necessary to protect the beneficial uses of the receiving water. The Regional Water Board has considered the factors listed in CWC section 13241 in establishing these requirements, as discussed in more detail in the Fact Sheet, Attachment F, Section IV.

2. **Antidegradation Policy.** 40 CFR 131.12 requires that the state water quality standards include an antidegradation policy consistent with the federal policy. The State Water Board established California's antidegradation policy in State Water Board Resolution No. 68-16. Resolution No. 68-16 incorporates the federal antidegradation policy where the federal policy applies under federal law. Resolution No. 68-16 requires that existing water quality be maintained unless degradation is justified based on specific findings. The Regional Water Board's Basin Plan implements, and incorporates by reference, both the State and federal antidegradation policies.

   The Discharger submitted an Antidegradation Analysis Report in accordance with the antidegradation provision of section 131.12 and State Water Board Resolution No. 68-16 stating that in order to maintain beneficial uses of the receiving water and to limit degradation of the receiving water, the Discharger operates a wastewater

treatment process that meets or exceeds the highest statutory and regulatory requirements which meets or exceeds Best Practical Treatment or Control (BPTC). The Regional Water Board finds that the Discharger implements water conservation measures, utilizes tertiary treatment technology, and is seeking to improve the communities potable water supply as the means of minimizing degradation and discharges in accordance with federal and State antidegradation policies. Therefore, the Regional Water Board finds that the Discharger is implementing all reasonable alternatives to discharge, and the permitted discharge allows important economic and social development to occur. Therefore, as discussed in more detail later in this Fact Sheet, this Order is in accordance with the antidegradation provision of section 131.12 and State Water Board Resolution No. 68-16.

3. **Anti-Backsliding Requirements.** Sections 402(o)(2) and 303(d)(4) of the CWA and federal regulations at title 40, Code of Federal Regulations section 122.44(l) prohibit backsliding in NPDES permits. These anti-backsliding provisions require that effluent limitations in a reissued permit must be as stringent as those in the previous permit, with some exceptions in which limitations may be relaxed. Compliance with the Anti-Backsliding requirements is discussed in Section IV.D.3.

4. **Emergency Planning and Community Right to Know Act**. Section 13263.6(a), California Water Code, requires that "the Regional Water Board shall prescribe effluent limitations as part of the waste discharge requirements of a POTW for all substances that the most recent toxic chemical release data reported to the state emergency response commission pursuant to Section 313 of the Emergency Planning and Community Right to Know Act of 1986 (42 U.S.C. Sec. 11023) (EPCRKA) indicate as discharged into the POTW, for which the State Water Board or the Regional Water Board has established numeric water quality objectives, and has determined that the discharge is or may be discharged at a level which will cause, have the reasonable potential to cause, or contribute to, an excursion above any numeric water quality objective".

   The Regional Water Board has adopted a numeric receiving water objective for ~~copper, cyanide, mercury,~~ selenium, ammonia, and boron in the Water Quality Control Plan for the Sacramento and San Joaquin River Basins (Basin Plan). As detailed elsewhere in this Permit, available effluent quality data indicate that effluent concentrations of ~~copper, cyanide, mercury,~~ selenium, ammonia, and boron do have a reasonable potential to cause or contribute to an excursion above numeric water quality objectives for ~~copper, cyanide, mercury,~~ selenium, ammonia, and boron included within the Basin Plan.

5. **Stormwater Requirements.** USEPA promulgated Federal Regulations for storm water on 16 November 1990 in 40 CFR Parts 122, 123, and 124. The NPDES Industrial Storm Water Program regulates storm water discharges from wastewater treatment facilities. Wastewater treatment plants are applicable industries under the stormwater program and are obligated to comply with the Federal Regulations.

6. **Endangered Species Act.** This Order does not authorize any act that results in the taking of a threatened or endangered species or any act that is now prohibited, or becomes prohibited in the future, under either the California Endangered Species Act (Fish and Game Code sections 2050 to 2097) or the Federal Endangered Species Act (16 U.S.C.A. sections 1531 to 1544). This Order requires compliance with effluent limits, receiving water limits, and other requirements to protect the beneficial uses of waters of the state. The Discharger is responsible for meeting all requirements of the applicable Endangered Species Act.

D. Impaired Water Bodies on CWA 303(d) List – Not Applicable

E. Other Plans, Polices and Regulations

IV. RATIONALE FOR EFFLUENT LIMITATIONS AND DISCHARGE SPECIFICATIONS

Effluent limitations and toxic and pretreatment effluent standards established pursuant to Sections 301 (Effluent Limitations), 302 (Water Quality Related Effluent Limitations), 304 (Information and Guidelines), and 307 (Toxic and Pretreatment Effluent Standards) of the Clean Water Act (CWA) and amendments thereto are applicable to the discharge.

The Federal CWA mandates the implementation of effluent limitations that are as stringent as necessary to meet water quality standards established pursuant to state or federal law [33 U.S.C., § 1311(b)(1)(C); 40 CFR, § 122.44(d)(1)]. NPDES permits must incorporate discharge limits necessary to ensure that water quality standards are met. This requirement applies to narrative criteria as well as to criteria specifying maximum amounts of particular pollutants. Pursuant to Federal Regulations, 40 CFR Section 122.44(d)(1)(i), NPDES permits must contain limits that control all pollutants that "*are or may be discharged at a level which will cause, have the reasonable potential to cause, or contribute to an excursion above any state water quality standard, including state narrative criteria for water quality*." Federal Regulations, 40 CFR, §122.44(d)(1)(vi), further provide that "[w]*here a state has not established a water quality criterion for a specific chemical pollutant that is present in an effluent at a concentration that causes, has the reasonable potential to cause, or contributes to an excursion above a narrative criterion within an applicable State water quality standard, the permitting authority must establish effluent limits.*"

The CWA requires point source discharges to control the amount of conventional, non-conventional, and toxic pollutants that are discharged into the waters of the United States. The control of pollutants discharged is established through effluent limitations and other requirements in NPDES permits. There are two principal bases for effluent limitations: 40 CFR §122.44(a) requires that permits include applicable technology-based limitations and standards, and 40 CFR §122.44(d) requires that permits include water quality-based effluent limitations to attain and maintain applicable numeric and narrative water quality criteria to protect the beneficial uses of the receiving water where numeric water quality objectives have not been established. The Regional Water Board's Basin Plan, page IV-17.00, contains an implementation policy ("Policy for

Application of Water Quality Objectives" that specifies that the Regional Water Board "*will, on a case-by-case basis, adopt numerical limitations in orders which will implement the narrative objectives*." This Policy complies with 40 CFR §122.44(d)(1). With respect to narrative objectives, the Regional Water Board must establish effluent limitations using one or more of three specified sources, including (1) EPA's published water quality criteria, (2) a proposed state criterion (*i.e*., water quality objective) or an explicit state policy interpreting its narrative water quality criteria (*i.e*., the Regional Water Board's "Policy for Application of Water Quality Objectives")(40 CFR 122.44(d)(1)(vi) (A), (B) or (C)), or (3) an indicator parameter. The Basin Plan contains a narrative objective requiring that: "*All waters shall be maintained free of toxic substances in concentrations that produce detrimental physiological responses in human, plant, animal, or aquatic life*" (narrative toxicity objective). The Basin Plan requires the application of the most stringent objective necessary to ensure that surface water and groundwater do not contain chemical constituents, discoloration, toxic substances, radionuclides, or taste and odor producing substances that adversely affect beneficial uses. The Basin Plan states that material and relevant information, including numeric criteria, and recommendations from other agencies and scientific literature will be utilized in evaluating compliance with the narrative toxicity objective. The Basin Plan also limits chemical constituents in concentrations that adversely affect surface water beneficial uses. For waters designated as municipal, the Basin Plan specifies that, at a minimum, waters shall not contain concentrations of constituents that exceed Maximum Contaminant Levels (MCL) of CCR Title 22. The Basin Plan further states that, to protect all beneficial uses, the Regional Water Board may apply limits more stringent than MCLs.

A. Discharge Prohibitions

1. *As stated in section I.G of Attachment D, Standard Provisions, this Order prohibits bypass from any portion of the treatment facility. Federal Regulations, 40 CFR 122.41 (m), define "bypass" as the intentional diversion of waste streams from any portion of a treatment facility. This section of the Federal Regulations, 40 CFR 122.41 (m)(4), prohibits bypass unless it is unavoidable to prevent loss of life, personal injury, or severe property damage. In considering the Regional Water Board's prohibition of bypasses, the State Water Board adopted a precedential decision, Order No. WQO 2002-0015, which cites the Federal Regulations, 40 CFR 122.41(m), as allowing bypass only for essential maintenance to assure efficient operation.*

B. Technology-Based Effluent Limitations

1. Scope and Authority

Regulations promulgated in section 125.3(a)(1) require technology-based effluent limitations for municipal Dischargers to be placed in NPDES permits based on Secondary Treatment Standards or Equivalent to Secondary Treatment Standards.

The Federal Water Pollution Control Act Amendments of 1972 (PL 92-500) established the minimum performance requirements for POTWs [defined in section

304(d)(1)]. Section 301(b)(1)(B) of that Act requires that such treatment works must, as a minimum, meet effluent limitations based on secondary treatment as defined by the USEPA Administrator.

Based on this statutory requirement, USEPA developed secondary treatment regulations, which are specified in Part 133. These technology-based regulations apply to all municipal wastewater treatment plants and identify the minimum level of effluent quality attainable by secondary treatment in terms of biochemical oxygen demand (BOD_5), total suspended solids (TSS), and pH.

2. Applicable Technology-Based Effluent Limitations

a. **BOD_5 and TSS.** Federal Regulations, 40 CFR, Part 133, establish the minimum weekly and monthly average level of effluent quality attainable by secondary treatment for BOD_5 and TSS. Tertiary treatment is necessary to protect the beneficial uses of the receiving stream and the final effluent limitations for BOD_5 and TSS are based on the technical capability of the tertiary process. BOD_5 is a measure of the amount of oxygen used in the biochemical oxidation of organic matter. The secondary and tertiary treatment standards for BOD_5 and TSS are indicators of the effectiveness of the treatment processes. The principal design parameter for wastewater treatment plants is the daily BOD_5 and TSS loading rates and the corresponding removal rate of the system. In applying 40 CFR Part 133 for weekly and monthly average BOD_5 and TSS limitations, the application of tertiary treatment processes results in the ability to achieve lower levels for BOD_5 and TSS than the secondary standards currently prescribed; the 30-day average BOD_5 and TSS limitations have been revised to 10 mg/L, which is technically based on the capability of a tertiary system. In addition to the average weekly and average monthly effluent limitations, a daily maximum effluent limitation for BOD_5 and TSS is included in the Order to ensure that the treatment works are not organically overloaded and operate in accordance with design capabilities. See Table F-3 for final technology-based effluent limitations required by this Order. In addition, 40 CFR 133.102, in describing the minimum level of effluent quality attainable by secondary treatment, states that the 30-day average percent removal shall not be less than 85 percent. If 85 percent removal of BOD_5 and TSS must be achieved by a secondary treatment plant, it must also be achieved by a tertiary (i.e., treatment beyond secondary level) treatment plant. This Order contains a limitation requiring an average of 85 percent removal of BOD_5 and TSS over each calendar month.

Final discharge limitations in this Order are based on the technical capability of tertiary wastewater treatment systems. Technology based limitations are utilized to assure the treatment systems are properly designed and operated. Discharge Limitations have been established for tertiary treatment or equivalent as 10 mg/L (30-day average), 15 mg/L (weekly average) and 20 mg/L (daily maximum) for both BOD and TSS.

b. **Flow.** The City of Woodland Water Pollution Control Facility is designed to provide a tertiary level of treatment at a design dry weather flow of up to 10.4 mgd. Therefore, this Order contains an Average Daily Discharge Flow effluent limit of 10.4 mgd.

c. **pH.** Federal regulations, 40 CFR Part 133, also establish technology-based effluent limitations for pH. The secondary treatment standards require the pH of the effluent to be no lower than 6.0 and no greater than 9.0 standard units.

Table F-3. Summary of Technology-based Effluent Limitations

Parameter	Units	Effluent Limitations				
		Average Monthly	Average Weekly	Maximum Daily	Instantaneous Minimum	Instantaneous Maximum
5-Day BOD @ 20 °C	mg/L	10	15	20	--	--
Total Suspended Solids	mg/L	10	15	20	--	--
BOD and TSS Removal	%	85	--	--	--	--
pH	standard units	--	--	--	6.0	9.0

C. Water Quality-Based Effluent Limitations (WQBELs)

1. Scope and Authority

As specified in section 122.44(d)(1)(i), permits are required to include WQBELs for pollutants (including toxicity) that are or may be discharged at levels that cause, have reasonable potential to cause, or contribute to an in-stream excursion above any state water quality standard. The process for determining reasonable potential and calculating WQBELs when necessary is intended to protect the designated uses of the receiving water as specified in the Basin Plan, and achieve applicable water quality objectives and criteria that are contained in other state plans and policies, or any applicable water quality criteria contained in the CTR and NTR.

2. Applicable Beneficial Uses and Water Quality Criteria and Objectives

a. **Receiving Water.** Tule Canal is a part of Yolo Bypass within Sacramento Delta Hydrologic Unit. Refer to Section III for beneficial uses.

b. **Hardness.** While no effluent limitation for hardness is necessary in this Order, hardness is critical to the assessment of the need for, and the development of, effluent limitations for certain metals. The *California Toxics Rule*, at (c)(4), states the following:

"Application of metals criteria. (i) *For purposes of calculating freshwater aquatic life criteria for metals from the equations in paragraph (b)(2) of this section, for waters with a hardness of 400 mg/L or less as calcium carbonate, the actual ambient hardness of the surface water* <u>*shall*</u> *be used in those equations*."

The State Water Board, in footnote 19 to Water Quality Order No. 2004-0013, stated: "*We note that…the Regional Water Board…applied a variable hardness value whereby effluent limitations will vary depending on the actual, current hardness values in the receiving water. We recommend that the Regional Water Board establish either fixed or seasonal effluent limitations for metals, as provided in the SIP, rather than 'floating' effluent limitations*."

Effluent limitations for the discharge must be set to protect the beneficial uses of the receiving water for all discharge conditions. In the absence of the option of including condition-dependent, "floating" effluent limitations that are reflective of actual conditions at the time of discharge, effluent limitations must be set using a reasonable worst-case condition in order to protect beneficial uses for all discharge conditions. For purposes of establishing water quality-based effluent limitations, water quality criteria for acute and chronic copper, acute and chronic chromium III, acute and chronic nickel, acute and chronic zinc, and chronic cadmium were developed using the lowest effluent hardness value 330 mg/L; water quality criteria for acute cadmium, acute and chronic lead, and acute silver were developed using the lowest receiving water hardness value 130 mg/L.

c. **Assimilative Capacity/Mixing Zone.** Tule Canal is ephemeral. The State Water Resources Control Board, in precedential decision, Order WQO 2002-0015, states that the use of the harmonic mean to determine flow rates is inappropriate for ephemeral streams where there is no consistent background dilution. The impact of considering a receiving stream to be ephemeral is that all limitations are "end of pipe" without any benefit of dilution. Based on the available information, the worst-case dilution is assumed to be zero to provide protection for the receiving water beneficial uses.

3. Determining the Need for WQBELs

a. CWA section 301 (b)(1) requires NPDES permits to include effluent limitations that achieve technology-based standards and any more stringent limitations necessary to meet water quality standards. Water quality standards include Regional Water Board Basin Plan beneficial uses and narrative and numeric water quality objectives, State Water Board-adopted standards, and federal standards, including the CTR and NTR. The Basin Plan includes numeric site-specific water quality objectives and narrative objectives for toxicity, chemical constituents, and tastes and odors. The narrative toxicity objective states: "*All waters shall be maintained free of toxic substances in concentrations that produce detrimental physiological responses in human, plant, animal, or aquatic life.*" (Basin Plan at III-8.00.) With regards to the narrative chemical constituents objective, the Basin Plan states that waters shall not contain chemical constituents in concentrations that adversely affect beneficial uses. At minimum, "…*water designated for use as domestic or municipal supply (MUN) shall not contain concentrations of chemical constituents in excess of the maximum contaminant levels (MCLs)*" in Title 22 of CCR. The narrative tastes and odors objective states: "*Water shall not contain taste- or odor-producing substances in*

concentrations that impart undesirable tastes or odors to domestic or municipal water supplies or to fish flesh or other edible products of aquatic origin, or that cause nuisance, or otherwise adversely affect beneficial uses."

b. Federal regulations require effluent limitations for all pollutants that are or may be discharged at a level that will cause or have the reasonable potential to cause, or contribute to an in-stream excursion above a narrative or numerical water quality standard. Based on information submitted as part of the application, in studies, and as directed by monitoring and reporting programs, the Regional Water Board finds that the discharge has a reasonable potential to cause or contribute to an in-stream excursion above a water quality standard for ammonia and selenium. Water quality-based effluent limitations (WQBELs) for these constituents are included in this Order.

c. The Regional Water Board conducted the RPA in accordance with Section 1.3 of the SIP. Although the SIP applies directly to the control of CTR priority pollutants, the State Water Board has held that the Regional Water Board may use the SIP as guidance for water quality-based toxics control.[1] The SIP states in the introduction "*The goal of this Policy is to establish a standardized approach for permitting discharges of toxic pollutants to non-ocean surface waters in a manner that promotes statewide consistency."* Therefore, in this Order the RPA procedures from the SIP were used to evaluate reasonable potential for both CTR and non-CTR constituents.

d. WQBELs were calculated in accordance with section 1.4 of the SIP, as described in Attachment F, Section IV.C.4.

e. **Ammonia.** Untreated domestic wastewater contains ammonia. Nitrification is a biological process that converts ammonia to nitrite and nitrite to nitrate. Denitrification is a process that converts nitrate to nitrite or nitric oxide and then to nitrous oxide or nitrogen gas, which is then released to the atmosphere. The Discharger currently uses nitrification to remove ammonia from the waste stream. Inadequate or incomplete nitrification may result in the discharge of ammonia to the receiving stream. Ammonia is known to cause toxicity to aquatic organisms in surface waters. Discharges of ammonia would violate the Basin Plan narrative toxicity objective. Applying 40 CFR section122.44(d)(1)(vi)(B), it is appropriate to use USEPA's Ambient National Water Quality Criteria for the Protection of Freshwater Aquatic Life for ammonia, which was developed to be protective of aquatic organisms.

USEPA's *Ambient Water Quality Criteria for the Protection of Freshwater Aquatic Life*, for total ammonia, recommends acute (1-hour average; criteria maximum concentration) standards based on pH and chronic (30-day average, criteria continuous concentration) standards based on pH and temperature. It also recommends a maximum four-day average concentration of 2.5 times the criteria continuous concentration. USEPA found that as pH increased, both the acute

[1] See, Order WQO 2001-16 (Napa) and Order WQO 2004-0013 (Yuba City)

and chronic toxicity of ammonia increased. Salmonids were more sensitive to acute toxicity effects than other species. However, while the acute toxicity of ammonia was not influenced by temperature, it was found that invertebrates and young fish experienced increasing chronic toxicity effects with increasing temperature. USEPA's recommended criteria are show below:

$$CCC_{30-day} = \left(\frac{0.0577}{1+10^{7.688-pH}} + \frac{2.487}{1+10^{pH-7.688}} \right) \times MIN\left(2.85, 1.45 \cdot 10^{0.028(25-T)}\right), \text{ and}$$

$$CMC = \left(\frac{0.275}{1+10^{7.204-pH}} + \frac{39.0}{1+10^{pH-7.204}} \right),$$

where *T* is in degrees Celsius

The previous Order contained "floating" effluent limitations for ammonia. In the absence of the option of including condition-dependant, "floating" effluent limitations, effluent limitations must be set using a reasonable worst-case condition in order to protect beneficial uses.

The maximum permitted effluent pH is 8.5. In order to protect against the worst-case short-term exposure of an organism, a pH value of 8.5 was used to derive the acute criterion. The resulting acute criterion is 2.14 mg/L.

Because Tule Canal is dominated by the effluent, the maximum observed rolling 30-day average temperature and the maximum observed pH of the effluent during the period when the maximum observed rolling 30-day average temperature occurred were used to calculate the 30-day CCC. The maximum observed effluent 30-day rolling average temperature was 25.8°C. The maximum observed effluent pH value during the period when the maximum observed rolling 30-day average temperature was 8.2.

Using a pH value of 8.2 and the highest temperature value of 25.8°C on a rolling 30-day basis, the resulting 30-day CCC is 0.87 mg/L (as N). The 4-day average concentration is derived in accordance with the USEPA criterion as 2.5 times the 30-day CCC. Based on a 30-day CCC of 0.87 mg/L (as N), the 4-day average concentration that should not be exceeded is 2.18 mg/L (as N).

The MEC for ammonia was 1.3 mg/L, based on 235 samples collected between June 2006 and December 2007. Therefore, ammonia in the discharge has a reasonable potential to cause or contribute to an in-stream excursion above a level necessary to protect aquatic life resulting in a violation of the Basin Plan's narrative toxicity objective.

The SIP procedure assumes a 4-day averaging period for calculating the long term average discharge condition (LTA). However, USEPA recommends modifying the procedure for calculating permit limits for ammonia using a 30-day averaging period for the calculation of the LTA corresponding to the 30-day

chronic criteria. Therefore, while the LTAs corresponding to the acute and 4-day chronic criteria were calculated according to SIP procedures, the LTA corresponding to the 30-day chronic criteria was calculated assuming a 30-day averaging period. The lowest LTA representing the acute, 4-day, and 30-day chronic criteria is then selected for deriving the AMEL and the MDEL. The remainder of the WQBEL calculation for ammonia was performed according to the SIP procedures.

This Order contains a final AMEL and MDEL for ammonia of 0.~~6~~8 mg/L and 2.~~0~~2 mg/L, respectively, based on USEPA's National Ambient Water Quality Criteria for the Protection of Freshwater Aquatic Life and to assure the treatment process adequately nitrifies the waste stream to protect the aquatic habitat beneficial uses (see Attachment F, Table F-8 for WQBEL calculations).

Based on the sample results in the effluent, it appears that the Discharger may be in immediate non-compliance upon issuance of the permit. New or modified control measures may be necessary in order to comply with the effluent limitations, and the new or modified control measures cannot be designed, installed and put into operation within 30 calendar days. The Basin Plan for the Sacramento and San Joaquin River Basins includes a provision that authorizes the use of compliance schedules in NPDES permits for water quality objectives adopted after September 25, 1995 (See Basin Plan at page IV-16). The water quality-based effluent limitations for ammonia are based on a new interpretation of the narrative standard for protection of receiving water beneficial uses. Therefore, a compliance schedule for compliance with the ammonia effluent limitations is established in the Order.

An interim performance-based maximum daily effluent limitation of 3.7 mg/L has been established in this Order. The interim limitation was determined as described in Attachment F, Section IV.E.3., and is in effect through 17 May 2010~~five years from adoption of this Order~~**.** As part of the compliance schedule, this Order requires the Discharger to submit a corrective action plan and implementation schedule to assure compliance with the final ammonia effluent limitations. In addition, the Discharger shall submit an engineering treatment feasibility study and prepare and implement a pollution prevention plan that is in compliance with CWC section 13263.3(d)(3).

f. **Chlorine Residual.** The previous permit contained effluent limitations for chlorine. However, the Discharger has since upgraded the Facility, and now uses UV Disinfection instead of disinfection by chlorination. Therefore, this Order does not contain chlorine effluent limitations. However, this Order requires the Discharger to monitor for total chlorine residual should chlorine be used at the Facility (e.g., Maintenance activities). This removal of the chlorine residual effluent limitation is consistent with the anti-backsliding requirements of the CWA and Federal regulations.

g. **Electrical Conductivity. (see Subsection ~~l~~k. Salinity)**

~~h.~~ **Mercury.** The current USEPA Ambient Water Quality Criteria for Protection of Freshwater Aquatic Life, continuous concentration, for mercury is 0.77 µg/L (30-day average, chronic criteria). The CTR contains a human health criterion (based on a one-in-a-million cancer risk) of 0.050 µg/L for waters from which both water and aquatic organisms are consumed. Both values are controversial and subject to change. In 40 CFR Part 131, USEPA acknowledges that the human health criteria may not be protective of some aquatic or endangered species and that "…*more stringent mercury limits may be determined and implemented through use of the State's narrative criterion.*" In the CTR, USEPA reserved the mercury criteria for freshwater and aquatic life and may adopt new criteria at a later date. The maximum observed effluent mercury concentration was 0.014 µg/L, based on 41 samples collected between June 2006 and December 2007. Wastewater from the treatment plant is discharged to Tule Canal, within the Yolo Bypass, which then flows to the Sacramento-San Joaquin Delta. Mercury bioaccumulates in fish tissue and, therefore, discharge of mercury to the receiving water is likely to contribute to exceedances of the narrative toxicity objective and impacts on beneficial uses. Because the Sacramento-San Joaquin Delta has been listed as an impaired water body for mercury, the discharge must not cause or contribute to increased mercury levels. The SIP, Section 1.3, requires the establishment of an effluent limitation for a constituent when the receiving stream background water quality exceeds an applicable criterion or objective. This Order carries forward Effluent Limitations for mercury as a monthly mass limitation of 0.088 lbs/month. The limitation was derived from the existing mass limitation of 1.06 lbs as a 12 month average divided by twelve months per year. Monitoring results indicate the Discharger can comply with the monthly mass limitation. This limitation will exist until a total maximum daily load (TMDL) can be established and USEPA develops mercury standards that are protective of human health. If USEPA develops new water quality standards for mercury, this permit may be reopened and the Effluent Limitations adjusted.

h. ~~**Oil and Grease.** Untreated domestic wastewater contains oil and grease. The Basin Plan includes a water quality objective for oil and grease in surface waters, which states: "*Waters shall not contain oils, greases, waxes, or other materials in concentrations that cause nuisance, result in a visible film or coating on the surface of the water or on objects in the water, or otherwise adversely affect beneficial uses*". This Order includes numeric monthly average and daily maximum Effluent Limitations of 10 mg/l and 15 mg/l, respectively, to implement the Basin Plan's narrative objective for oil and grease. These effluent limitations are based on best professional judgment (BPJ) and Regional Water Board staff's experience with wastewater treatment plant capabilities and levels necessary to meet the Basin Plan objective for oil and grease. Effluent limitations are being carried forward from the existing Order. A daily maximum effluent limitation for oil and grease is included in this Order, in lieu of a weekly average, to ensure that the treatment works operate in accordance with design capabilities. The daily maximum effluent limitation will also ensure that the Discharger requires proper removal and disposal of oil and grease from commercial food service sources and properly operates and maintains the collection system to minimize~~

~~plugging from oil and grease. The Discharger can also maintain compliance through educating the public on the impacts of discharging oil and grease into the collection system.~~

i. **Pathogens.** The beneficial uses of the Tule Canal include municipal and domestic supply, water contact recreation and agricultural irrigation supply, and there is, at times, less than 20:1 dilution. To protect these beneficial uses, the Regional Water Board finds that the wastewater must be disinfected and adequately treated to prevent disease. The principal infectious agents (pathogens) that may be present in raw sewage may be classified into three broad groups: bacteria, parasites, and viruses. Tertiary treatment, consisting of chemical coagulation, sedimentation, and filtration, has been found to remove approximately 99.5% of viruses. Filtration is an effective means of reducing viruses and parasites from the waste stream. The wastewater must be treated to tertiary standards (filtered), or equivalent, to protect contact recreational and food crop irrigation uses.

The California Department of Public Health ~~Services~~ (DPH~~S~~) has developed reclamation criteria, CCR, Division 4, Chapter 3 (Title 22), for the reuse of wastewater. Title 22 requires that for spray irrigation of food crops, parks, playgrounds, schoolyards, and other areas of similar public access, wastewater be adequately disinfected, oxidized, coagulated, clarified, and filtered, and that the effluent total coliform levels not exceed 2.2 MPN/100 m*l* as a 7-day median. As coliform organisms are living and mobile, it is impracticable to quantify an exact number of coliform organisms and to establish weekly average limitations. Instead, coliform organisms are measured as a most probable number and regulated based on a 7-day median limitation.

Title 22 also requires that recycled water used as a source of water supply for non-restricted recreational impoundments be disinfected tertiary recycled water that has been subjected to conventional treatment. A non-restricted recreational impoundment is defined as "*…an impoundment of recycled water, in which no limitations are imposed on body-contact water recreational activities.*" Title 22 is not directly applicable to surface waters; however, the Regional Water Board finds that it is appropriate to apply an equivalent level of treatment to that required by DPH~~S~~'s reclamation criteria because the receiving water is used for irrigation of agricultural land and for contact recreation purposes. The stringent disinfection criteria of Title 22 are appropriate since the undiluted effluent may be used for the irrigation of food crops and/or for body-contact water recreation. Coliform organisms are intended as an indicator of the effectiveness of the entire treatment train and the effectiveness of removing other pathogens. The method of treatment is not prescribed by this Order; however, wastewater must be treated to a level equivalent to that recommended by DHS.

In addition to coliform testing, a turbidity effluent limitation has been included as a second indicator of the effectiveness of the treatment process and to assure compliance with the required level of treatment. The tertiary treatment process,

or equivalent, is capable of reliably meeting a turbidity limitation of 2 nephelometric turbidity units (NTU) as a daily average. Failure of the filtration system such that virus removal is impaired would normally result in increased particles in the effluent, which result in higher effluent turbidity. Turbidity has a major advantage for monitoring filter performance, allowing immediate detection of filter failure and rapid corrective action. Coliform testing, by comparison, is not conducted continuously and requires several hours, to days, to identify high coliform concentrations. Therefore, to ensure compliance with the DHS recommended Title 22 disinfection criteria, weekly average effluent limitations are impracticable for turbidity.

j. **pH.** The Basin Plan includes a water quality objective for surface waters (except for Goose Lake) that the "…*pH shall not be depressed below 6.5 nor raised above 8.5. Changes in normal ambient pH levels shall not exceed 0.5 in fresh waters with designated COLD or WARM beneficial uses.*" Effluent Limitations for pH are included in this Order based on the Basin Plan objectives for pH.

k. **Salinity.** The discharge contains total dissolved solids (TDS), chloride, sulfate, and electrical conductivity (EC). These are water quality parameters that are indicative of the salinity of the water. Their presence in water can be growth limiting to certain agricultural crops and can affect the taste of water for human consumption. There are no USEPA water quality criteria for the protection of aquatic organisms for these constituents. The Basin Plan contains a chemical constituent objective that incorporates State MCLs, contains a narrative objective, and contains numeric water quality objectives for EC, TDS, Sulfate, and Chloride.

Table F-4. Salinity Water Quality Criteria/Objectives

Parameter	Agricultural WQ Goal[1]	Secondary MCL[3]	Effluent	
			Avg	Max
EC (µmhos/cm)	700[2]	900, 1600, 2200	1562	1844
TDS (mg/L)	450[2]	500, 1000, 1500	1042	1256
Boron (µg/L)	700	N/A	2540	3400
Sulfate (mg/L)	N/A	250, 500, 600	N/A	N/A
Chloride (mg/L)	106[2]	250, 500, 600	N/A	N/A

1 Agricultural water quality goals based on *Water Quality for Agriculture*, Food and Agriculture Organization of the United Nations—Irrigation and Drainage Paper No. 29, Rev. 1 (R.S. Ayers and D.W. Westcot, Rome, 1985)

2 Agricultural water quality goals listed provide no restrictions on crop type or irrigation methods for maximum crop yield. Higher concentrations may require special irrigation methods to maintain crop yields or may restrict types of crops grown.

3 The secondary MCLs are stated as a recommended level, upper level, and a short-term maximum level.

i. **Boron.** The Agricultural Water Quality Goal for boron is 700 µg/L. Boron in excessive concentration can cause damage to plant life.

The MEC for boron was 3000 µg/L, based on 15 samples collected between June 2006 and December 2007. No dilution is allowed due to periods of no flow in the receiving water. Agricultural irrigation is designated as a beneficial use of the receiving stream. Undiluted wastewater effluent can be withdrawn from Tule Canal for agricultural irrigation.

ii. **Chloride**. The secondary MCL for chloride is 250 mg/L, as recommended level, 500 mg/L as an upper level, and 600 mg/L as a short-term maximum. The recommended agricultural water quality goal for chloride, that would apply the narrative chemical constituent objective, is 106 mg/L as a long-term average based on Water Quality for Agriculture, Food and Agriculture Organization of the United Nations—Irrigation and Drainage Paper No. 29, Rev. 1 (R.S. Ayers and D.W. Westcot, Rome, 1985). The 106 mg/L water quality goal is intended to protect against adverse effects on sensitive crops when irrigated via sprinklers.

iii. **Electrical Conductivity (EC)**. The secondary MCL for EC is 900 µmhos/cm as a recommended level, 1600 µmhos/cm as an upper level, and 2200 µmhos/cm as a short-term maximum. The agricultural water quality goal, that would apply the narrative chemical constituents objective, is 700 µmhos/cm as a long-term average based on Water Quality for Agriculture, Food and Agriculture Organization of the United Nations—Irrigation and Drainage Paper No. 29, Rev. 1 (R.S. Ayers and D.W. Westcot, Rome, 1985). The 700 µmhos/cm agricultural water quality goal is intended to prevent reduction in crop yield, i.e. a restriction on use of water, for salt-sensitive crops, such as beans, carrots, turnips, and strawberries. These crops are either currently grown in the area or may be grown in the future. Most other crops can tolerate higher EC concentrations without harm, however, as the salinity of the irrigation water increases, more crops are potentially harmed by the EC, or extra measures must be taken by the farmer to minimize or eliminate any harmful impacts.

A review of the Discharger's monitoring reports from June 2006 through December 2007 shows an average effluent EC of 1562 µmhos/cm, with a range from 936 µmhos/cm 1844 µmhos/cm for 507 samples. The ECse levels in the discharge exceed the applicable objectivesagricultural water quality goal of 700 umhos/cm. The background receiving water EC averaged 613 µmhos/cm in 156 sampling events collected by the Discharger from March 2003 through December 2007.

iv. **Sulfate**. The secondary MCL for sulfate is 250 mg/L as recommended level, 500 mg/L as an upper level, and 600 mg/L as a short-term maximum.

v. **Total Dissolved Solids (TDS).** The secondary MCL for TDS is 500 mg/L as a recommended level, 1000 mg/L as an upper level, and 1500 mg/L as a short-term maximum. The recommended agricultural water quality goal for TDS, that would apply the narrative chemical constituent objective, is 450 mg/L as a long-term average based on Water Quality for Agriculture, Food and Agriculture Organization of the United Nations—Irrigation and Drainage Paper No. 29, Rev. 1 (R.S. Ayers and D.W. Westcot, Rome, 1985). Water Quality for Agriculture evaluates the impacts of salinity levels on crop tolerance and yield reduction, and establishes water quality goals that are protective of the agricultural uses. The 450 mg/L water quality goal is intended to prevent reduction in crop yield, i.e. a restriction on use of water, for salt-sensitive crops. Only the most salt sensitive crops require irrigation water of 450 mg/L or less to prevent loss of yield. Most other crops can tolerate higher TDS concentrations without harm, however, as the salinity of the irrigation water increases, more crops are potentially harmed by the TDS, or extra measures must be taken by the farmer to minimize or eliminate any harmful impacts.

The average TDS effluent concentration was 1042 mg/L and a ranged from 882 mg/L to 1256 mg/L for 338 samples collected by the Discharger from June 2006 through December 2007. These concentrations exceed the ~~applicable~~ agricultural water quality ~~objectives~~goal.

~~vi.~~ **Salinity Effluent Limitations.** To protect the beneficial uses of the receiving water, this Order contains ~~e Discharger has~~ performance~~-~~-based effluent limitations for boron and ~~electrical conductivity~~EC. In addition, the Discharger is required to submit periodic updates to the Regional Water Board on the City of Woodland's progress in improving their potable water supply. Improving the potable water supply should result in decreases in EC and boron concentrations in the Discharger's effluent.

~~I.~~ ~~**Settleable Solids.** For inland surface waters, the Basin Plan states that "[w]ater shall not contain substances in concentrations that result in the deposition of material that causes nuisance or adversely affects beneficial uses." This Order contains average monthly and average daily effluent limitations for settleable solids.~~

~~Because the amount of settleable solids is measured in terms of volume per volume without a mass component, it is impracticable to calculate mass limitations for inclusion in this Order. A daily maximum effluent limitation for settleable solids is included in the Order, in lieu of a weekly average, to ensure that the treatment works operate in accordance with design capabilities.~~

I. **Selenium.** The Agricultural Water Quality Goal for selenium is 20 µg/L. U.S. EPA established CTR criteria for the protection of freshwater aquatic life for selenium. The continuous concentration (four-day average) and the maximum

concentration (one-hour average) criteria for selenium are 5.0 µg/L and 20 µg/L, respectively.

The MEC for selenium was 32 µg/L, based on 14 samples collected between June 2006 and December 2007. Therefore, the discharge has a reasonable potential to cause or contribute to an in-stream excursion above the CTR criteria for selenium. No dilution is allowed due to periods of no flow in the receiving water. An AMEL and MDEL for selenium of 3.2 µg/L and 9.2 µg/L, respectively, are included in this Order based on CTR criteria for the protection of freshwater aquatic life (See Attachment F, Table F-11 for WQBEL calculations).

As report by the Discharger, the selenium in the Discharger's influent is primarily from the City's potable water (groundwater). The Discharger believes that the most cost effective method for lowering the effluent selenium, as well as other dissolved pollutants in the groundwater, is to obtain new municipal water supplies. Development of a new surface water supply is a longer-term plan that is expected to be completed sometime between 2016 and 2020.

The Discharger is unable to comply with these limitations. Section 2.1 of the SIP allows for compliance schedules within the permit for existing discharges where it is demonstrated that it is infeasible for a Discharger to achieve immediate compliance with a CTR criterion. Using the statistical methods for calculating interim effluent limitations described in Attachment F, Section IV.D.1., an interim performance-based maximum daily limitation of 31 µg/L was calculated.

Section 2.1 of the SIP provides that: "*Based on an existing discharger's request and demonstration that it is infeasible for the discharger to achieve immediate compliance with a CTR criterion, or with an effluent limitation based on a CTR criterion, the RWQCB may establish a compliance schedule in an NPDES permit.*" Section 2.1, further states that compliance schedules may be included in NPDES permits provided that the following justification has been submitted: …"*(a) documentation that diligent efforts have been made to quantify pollutant levels in the discharge and the sources of the pollutant in the waste stream; (b) documentation of source control measures and/or pollution minimization measures efforts currently underway or completed; (c) a proposal for additional or future source control measures, pollutant minimization actions, or waste treatment (i.e., facility upgrades); and (d) a demonstration that the proposed schedule is as short as practicable*." The new water quality-based effluent limitations for selenium become effective on **May 18, 2010**.

This Order requires the Discharger to submit a corrective action plan and implementation schedule to assure compliance with the final selenium effluent limitations. The interim effluent limitations are in effect through **May 17, 2010**. As part of the compliance schedule for selenium, the Discharger shall develop a pollution prevention program in compliance with CWC section 13263.3(d)(3) and submit an engineering treatment feasibility study.

The Discharger has indicated in the 13 August 2008 Infeasibility Report that additional time may be required beyond 18 May 2010 to comply with final effluent limits for selenium. Based on the Discharger's schedule to obtain new municipal water supplies, the Regional Water Board may consider at a future date issuance of a Time Schedule Order to provide additional time to comply with final effluent limits for selenium.

m. **Toxicity.** See Section IV.C.5. of the Fact Sheet regarding whole effluent toxicity.

4. WQBEL Calculations

a. Effluent limitations for ammonia, copper, cyanide, and selenium were calculated in accordance with section 1.4 of the SIP. The following paragraphs describe the methodology used for calculating effluent limitations.

b. **Effluent Limitation Calculations.** In calculating maximum effluent limitations, the effluent concentration allowances were set equal to the criteria/standards/objectives.

$$ECA_{acute} = CMC \qquad ECA_{chronic} = CCC$$

For the human health, agriculture, or other long-term criterion/objective, a dilution credit can be applied. The ECA is calculated as follows:

$$ECA_{HH} = HH + D(HH - B)$$

where:

ECA_{acute} = effluent concentration allowance for acute (one-hour average) toxicity criterion

$ECA_{chronic}$ = effluent concentration allowance for chronic (four-day average) toxicity criterion

ECA_{HH} = effluent concentration allowance for human health, agriculture, or other long-term criterion/objective

CMC = criteria maximum concentration (one-hour average)

CCC = criteria continuous concentration (four-day average, unless otherwise noted)

HH = human health, agriculture, or other long-term criterion/objective

D = dilution credit

B = maximum receiving water concentration

Acute and chronic toxicity ECAs were then converted to equivalent long-term averages (LTA) using statistical multipliers and the lowest is used. Additional

statistical multipliers were then used to calculate the maximum daily effluent limitation (MDEL) and the average monthly effluent limitation (AMEL).

Human health ECAs are set equal to the AMEL and a statistical multiplier is used to calculate the MDEL.

$$AMEL = mult_{AMEL}\left[\min\left(\overbrace{M_A ECA_{acute}}^{LTA_{acute}}, M_C ECA_{chronic}\right)\right]$$

$$MDEL = mult_{MDEL}\left[\min\left(M_A ECA_{acute}, \underbrace{M_C ECA_{chronic}}_{LTA_{chronic}}\right)\right]$$

$$MDEL_{HH} = \left(\frac{mult_{MDEL}}{mult_{AMEL}}\right) AMEL_{HH}$$

where: $mult_{AMEL}$ = statistical multiplier converting minimum LTA to AMEL
$mult_{MDEL}$ = statistical multiplier converting minimum LTA to MDEL
M_A = statistical multiplier converting CMC to LTA
M_C = statistical multiplier converting CCC to LTA

Water quality-based effluent limitations were calculated for ammonia and selenium as follows in Tables F-5 through F-6, below.

Table F-5. WQBEL Calculations for Ammonia

	Acute	Chronic
pH [1]	8.5	8.2
Temperature °C [2]	N/A	25.8
Criteria (mg/L) [3]	2.14	0.87
Dilution Credit	No Dilution	No Dilution
ECA	2.14	0.87
ECA Multiplier	0.~~07~~19	0.~~2~~64
LTA [4]	0.41~~15~~	0.56~~17~~
AMEL Multiplier (95th%)	2.03~~3.82~~	[5]
AMEL (mg/L)	**0.83~~57~~**	[5]
MDEL Multiplier (99th%)	5.29~~13.52~~	[5]
MDEL (mg/L)	**2.17~~03~~**	[5]

(1) Acute design pH = 8.5 (max. allowed effluent pH), Chronic design pH = highest reported pH
(2) Temperature = Maximum 30-day average seasonal effluent temperature
(3) USEPA Ambient Water Quality Criteria
(4) LTA developed based on Acute and Chronic ECA Multipliers calculated at 99th percentile level per sections 5.4.1 and 5.5.4 of TSD.
(5) Limitations based on acute LTA ($LTA_{acute} < LTA_{chronic}$)

Table F-6. WQBEL Calculations for Selenium

	Acute	Chronic
Criteria, dissolved (µg/L)	20	5

Dilution Credit	No Dilution	No Dilution
ECA, total recoverable	20	5
ECA Multiplier	0.15	0.27
LTA	2.96	1.36
AMEL Multiplier (95th%)	(1)	2.36
AMEL (µg/L)	(1)	3.21
MDEL Multiplier (99th%)	(1)	6.76
MDEL (µg/L)	(1)	9.19

(1) Limitations based on chronic LTA (Chronic LTA < Acute LTA)

Table F-7. Summary of Water Quality-based Effluent Limitations

Parameter	Units	Effluent Limitations				
		Average Monthly	Average Weekly	Maximum Daily	Instantaneous Minimum	Instantaneous Maximum
pH	standard units	--	--	--	6.5	8.5
Ammonia	mg/L	0.8~~6~~	--	2.0~~0~~2	--	--
Selenium	ug/L	3.2	--	9.2	--	--

5. Whole Effluent Toxicity (WET)

For compliance with the Basin Plan's narrative toxicity objective, this Order requires the Discharger to conduct whole effluent toxicity testing for acute and chronic toxicity, as specified in the Monitoring and Reporting Program (Attachment E, Section V.). This Order also contains effluent limitations for acute toxicity and requires the Discharger to implement best management practices to investigate the causes of, and identify corrective actions to reduce or eliminate effluent toxicity.

a. **Acute Aquatic Toxicity.** The Basin Plan contains a narrative toxicity objective that states, "*All waters shall be maintained free of toxic substances in concentrations that produce detrimental physiological responses in human, plant, animal, or aquatic life.*" (Basin Plan at III-8.00) The Basin Plan also states that, "…*effluent limits based upon acute biotoxicity tests of effluents will be prescribed where appropriate*…". USEPA Region 9 provided guidance for the development of acute toxicity effluent limitations in the absence of numeric water quality objectives for toxicity in its document titled "Guidance for NPDES Permit Issuance", dated February 1994. In section B.2. "Toxicity Requirements" (pgs. 14-15) it states that, "*In the absence of specific numeric water quality objectives for acute and chronic toxicity, the narrative criterion 'no toxics in toxic amounts' applies. Achievement of the narrative criterion, as applied herein, means that ambient waters shall not demonstrate for acute toxicity: 1) less than 90% survival, 50% of the time, based on the monthly median, or 2) less than 70% survival, 10% of the time, based on any monthly median. For chronic toxicity, ambient waters shall not demonstrate a test result of greater than 1 TUc."* Accordingly, effluent limitations for acute toxicity have been included in this Order as follows:

Acute Toxicity. Survival of aquatic organisms in 96-hour bioassays of undiluted waste shall be no less than:

Minimum for any one bioassays ----------	70%
Median for any three or more consecutive bioassays ---------	90%

b. **Chronic Aquatic Toxicity.** The Basin Plan contains a narrative toxicity objective that states, "All waters shall be maintained free of toxic substances in concentrations that produce detrimental physiological responses in human, plant, animal, or aquatic life." (Basin Plan at III-8.00) Adequate WET data is not available to determine if the discharge has reasonable potential to cause or contribute to an in-stream excursion above of the Basin Plan's narrative toxicity objective. Attachment E of this Order requires quarterly chronic WET monitoring for demonstration of compliance with the narrative toxicity objective.

A narrative effluent limit is included in this Order that requires that there shall be no chronic toxicity in the effluent discharge.

To ensure compliance with the Basin Plan's narrative toxicity objective and the narrative toxicity limitation contained in this Order, the Discharger is required to conduct chronic whole effluent toxicity testing, as specified in the Monitoring and Reporting Program (Attachment E, Section V.).

In addition to WET monitoring, Special Provisions VI.C.2.a. requires the Discharger to submit to the Regional Water Board an Initial Investigative TRE Work Plan for approval by the Executive Officer, to ensure the Discharger has a plan to immediately move forward with the initial tiers of a TRE, in the event effluent toxicity is encountered in the future. The provision also includes a numeric toxicity monitoring trigger and requirements for accelerated monitoring, as well as, requirements for TRE initiation if a pattern of toxicity is demonstrated. The numeric toxicity monitoring trigger is not an effluent limitation, it is the toxicity threshold at which the Discharger is required to perform accelerated chronic toxicity monitoring, as well as the threshold to initiate a TRE if a pattern of effluent toxicity has been demonstrated.

D. Final Effluent Limitations

1. Mass-based Effluent Limitations.

Title 40 CFR 122.45(f)(1) requires effluent limitations be expressed in terms of mass, with some exceptions, and 40 CFR 122.45(f)(2) allows pollutants that are limited in terms of mass to additionally be limited in terms of other units of measurement. This Order includes effluent limitations expressed in terms of mass and concentration. In addition, pursuant to the exceptions to mass limitations provided in 40 CFR 122.45(f)(1), some effluent limitations are not expressed in terms of mass, such as pH and temperature, and when the applicable standards are expressed in terms of

concentration (e.g. CTR criteria and MCLs) and mass limitations are not necessary to protect the beneficial uses of the receiving water.

Mass-based effluent limitations were calculated based upon the permitted average daily discharge flow allowed in Section IV.A.1 of the Limitations and Discharge Requirements.

2. Averaging Periods for Effluent Limitations.

Title 40 CFR 122.45 (d) requires average weekly and average monthly discharge limitations for publicly owned treatment works (POTWs) unless impracticable. However, for toxic pollutants and pollutant parameters in water quality permitting, the US EPA recommends the use of a maximum daily effluent limitation in lieu of average weekly effluent limitations for two reasons. "*First, the basis for the 7-day average for POTWs derives from the secondary treatment requirements. This basis is not related to the need for assuring achievement of water quality standards. Second, a 7-day average, which could comprise up to seven or more daily samples, could average out peak toxic concentrations and therefore the discharge's potential for causing acute toxic effects would be missed.*" (TSD, pg. 96) This Order utilizes maximum daily effluent limitations in lieu of average weekly effluent limitations for ammonia, ~~copper, and dissolved oxygen~~ as recommended by the TSD for the achievement of water quality standards and for the protection of the beneficial uses of the receiving stream. Furthermore, for BOD, TSS, pH, coliform, and turbidity, weekly average effluent limitations have been replaced or supplemented with effluent limitations utilizing shorter averaging periods. The rationale for using shorter averaging periods for these constituents is discussed in Attachment F, Section IV.C.3., above.

3. Satisfaction of Anti-Backsliding Requirements.

Some effluent limitations in this Order are less stringent that those in the previous Order. As discussed below this relaxation of effluent limitations is consistent with the anti-backsliding requirements of the CWA and federal regulations.

Order No. R5-2003-0031-R01 requires effluent limitations of total chlorine residual, dibromochloromethane, oil and grease, settleable solids, aluminum, iron, and fluoride. The Discharger has completed upgrades to the facility including the addition of an ultraviolet light disinfection system as well as tertiary filtration. Effluent limitations of total chlorine residual and dibromochloromethane are eliminated due to the replacement of chlorination disinfection system with an ultraviolet (UV) light disinfection system. Effluent limitations of aluminum, iron, and fluoride are eliminated due to new monitoring information becoming available resulting in no reasonable potential for these parameters to cause or have the reasonable potential to cause, or contribute to an in-stream excursion above a narrative or numerical water quality standard. Effluent limitations for oil and grease and settleable solids are being removed based on improved pretreatment and treatment systems being employed at the Facility. In the past, oil and grease issues were common at POTWs and an effluent limitation was necessary to protect receiving waters. The

implementation of fats, oil, and grease (FOG) pretreatment programs, along with the upgrades of the treatment system to a tertiary level of performance, have resulted the reduction of oil and grease in the Facility's effluent to non-detect levels. In addition, the Discharger has not had detectable levels of settleable solids in their effluent over the past five years. Elimination of effluent limitations of these constituents is consistent with the antidegradation provisions of 40 CFR 131.12 and State Water Resources Control Board Resolution 68-16. Any impact on existing water quality will be insignificant.

The previous permit contained effluent limitations for turbidity. The prior limitations were solely an operational check to ensure the treatment system was functioning properly and could meet the limits for solids and coliform. The prior effluent limitations were not intended to regulate turbidity in the receiving water. Rather, turbidity is an operational parameter to determine proper system functioning and not a water quality based limitation.

The revised Order contains performance based operational turbidity specifications to be met prior to disinfection in lieu of effluent limitations. The revised Order does not include effluent limitations for turbidity. However, the performance-based specification in this Order is an equivalent limit that is not less stringent, and therefore does not constitute backsliding.

The proposed revised operational specifications for turbidity are the same as the effluent limitations in the previous permit, with the inclusion of a more stringent requirement for an instantaneous maximum limit at any time. (See Special Provisions 4.A. Ultraviolet Disinfection (UV) System Operating Specifications for turbidity specifications.) The proposed revised permit moves the point of compliance from the final effluent after disinfection to an internal compliance point prior to disinfection. These revisions are consistent with state regulations implementing recycled water requirements.

The revision in the turbidity limitation is consistent with the antidegradation provisions of 40 CFR 131.12 and State Water Resources Control Board Resolution 68-16 because this Order imposes equivalent or more stringent requirements than the prior permit and therefore does not allow degradation

The previous Order required chlorine residual weekly and daily averages effluent limitations at 0.01 and 0.02 respectively. This Order removes these chlorine residual limitations, because the Discharger discontinued the use of chlorine for disinfection~~s~~, and now uses ultraviolet (UV) disinfection.

4. Satisfaction of Antidegradation Policy

a. **Surface Water.** The Discharger included an antidegradation analysis in conjunction with their Report of Waste Discharge that provides a complete antidegradation analysis following the guidance provided by State Water Board APU 90-004. The Report of Waste Discharge was prepared by ECO:LOGIC Engineering. Pursuant to the guidelines, the antidegradation analysis evaluated

whether changes in water quality resulting from the proposed increase from 7.8 mgd to 10.4 mgd in discharge flow to Tule Canal are consistent with the maximum benefit to the people of the state, will not unreasonably affect beneficial uses, will not cause water quality to be less than water quality objectives, and that the discharge will provide protection for existing in-stream uses and water quality necessary to protect those uses. The Regional Water Board concurs with the Antidegradation Analysis.

i. **Water Quality Parameters and Beneficial Uses that will be Affected by This Order and the Extent of the Impact.** The discharge authorized by this Order does not adversely impact beneficial uses of the receiving water or downstream receiving waters. All beneficial uses will be maintained and protected. This Order provides for an increase in the volume and mass of pollutants discharged directly to the receiving water. 40 CFR 131.12 defines the following tier designations to describe water quality in the receiving water body:

- Tier 1 Designation: *Existing instream water uses and the level of water quality necessary to protect the existing uses shall be maintained and protected. (40 CFR 131.12)*

- Tier 2 Designation: *Where the quality of waters exceed levels necessary to support propagation of fish, shellfish, and wildlife and recreation in and on the water, that quality shall be maintained and protected unless the State finds, after full satisfaction of the intergovernmental coordination and public participation provisions of the State's continuing planning process, that allowing lower water quality is necessary to accommodate important economic or social development in the area in which the waters are located. In allowing such degradation or lower water quality, the State shall assure water quality adequate to protect existing uses fully. Further, the State shall assure that there shall be achieved the highest statutory and regulatory requirements for all new and existing point sources and all cost-effective and reasonable best management practices for nonpoint source control. (40 CFR 131.12)*

The tier designation is assigned on a pollutant-by-pollutant basis. The following is the potential effect on water quality parameters regulated in this Order, as was assessed in the antidegradation analysis:

- The projected increase in permitted discharge capacity causes slight increases in downstream water quality concentrations in Tule Canal for some constituents, primarily due to the quality of the City's potable water supply. The projected increases will not adversely affect existing or probable beneficial uses of Tule Canal, nor will it cause water quality to fall below applicable water quality objectives.

- The City of Woodland is in the process of improving their potable water supply. This will improve the quality of influent to the Discharger and lower effluent concentrations of EC, boron, and selenium.

ii. **Scientific Rationale for Determining Potential Impacts to Water Quality**. The rationale used in the antidegradation analysis is based on 40 CFR 131.12, State Water Board Resolution No. 68-16, and an Administrative Procedures Update (APU 90-004) issued by the State Water Board to the Regional Water Boards.

The scientific rationale used in the Antidegradation Analysis to determine if the Order allows a lowering of water quality is to compare the projected receiving water quality to the water quality objectives and/or criteria used to protect designated beneficial uses. This approach addresses a key objective of the antidegradation analysis to "*[c]ompare receiving water quality to the water quality objectives established to protect designated beneficial uses*" (APU 90-004). APU 90-004 also requires the consideration of "feasible alternative control measures" as part of the procedures for a complete antidegradation analysis.

The antidegradation analysis provided an assessment of expected water quality impl~~l~~acts on Tule Canal if the discharge volume in increased to 10.4 mgd. Pollutants that significantly increased concentration or mass downstream would have required an alternatives analysis to determine whether implementation of alternatives to the proposed action would be in the best socioeconomic interest of the people of the region, and be to the maximum benefit of the people of the State. Details on the scientific rationale are discussed in detail in the antidegradation analysis. This includes a detailed discussion of the analytical equations, historical data, and long-term water quality effects associated with a continuous discharge to Tule Canal.

The Regional Water Board concurs with this scientific approach.

iii. **Alternative Control Measures.** The Discharger considered several alternatives that would reduce or eliminate the lowering of water quality resulting from the proposed 10.4 mgd discharge. Effluent disposal alternatives were assessed to determine if any alternative would substantially reduce or eliminate the lowering of water quality as a result of the proposed discharge. Alternatives included 1) not increasing Facility capacity, 2) improving potable water supplies, and 3) additional advanced wastewater treatment and additional re-aeration facilities. Each of these alternatives possess unique abilities to address water quality constituents of concern, and each has distinct implementation benefits, liabilities, and costs.

iv. **Socioeconomic Evaluation.** The objective of the socioeconomic analysis was to determine if the lowering of Tule Canal water quality is in the maximum interest of the people of the state. Given the current infrastructure, future development in the City of Woodland would rely on the Discharger for

wastewater collection and treatment. The plant expansion and new 10.4 mgd surface water discharge would accommodate planned and approved growth in the City of Woodland and surrounding areas. From a socioeconomic impact perspective, construction and operation of additional advanced treatment would lead to a projected $39 to $52 dollars per month in user fees (based in 2004 dollars), while adding reaeration facilities would add an additional $2 to $5 per month to the monthly rate. Improving the potable water supply is estimated to increase water bills by approximately $20 per month. The City is in the process of improving the potable water supply. Requiring additional treatment will lead to decreases in "after tax" or disposable personal income (DPI) spending of ratepayers. Reductions in DPI in the City's local economy due to the financing of additional treatment, in addition to the significant 2006 upgrades to the treatment plant, would result in fewer dollars being spent on non-essential goods and services by ratepayers. Decreased spending within an economy ultimately leads to decreases in labor demand, which further impacts household spending due to losses in employment. Increased connection fees for business, commercial, and industrial ratepayers makes Woodland a less attractive place to establish or expand such businesses, when all other considerations remain unchanged. On balance, allowing the minor degradation of water quality is in the best interest of the people of the area and the state, compared to other options, and is necessary to accommodate important economic or social development in the area.

v. **Justification for Allowing Degradation.** Potential degradation identified in the antidegradation analysis due to this Order is justified by the following considerations:

- Implementation of alternatives does not provide important socioeconomic benefit to the people of the region, nor do they provide maximum benefit to the people of the State. The socioeconomic evaluation of alternatives to the proposed project would inhibit socioeconomic growth making it economically infeasible for any new development to occur.

- The Discharger's planned expansion will continue to produce Title 22 tertiary treated effluent that will result in minimal water quality degradation. The Discharger's planned wastewater treatment process will meet or exceed the highest statutory and regulatory requirements which meets or exceeds best practical treatment and control (BPTC);

- This Order is fully protective of beneficial use of Tule Canal. The anticipated water quality changes in Tule Canal will not reduce or impair its designated beneficial uses and is consistent with State and federal antidegradation policies;

- No feasible alternatives currently exist to reduce the impacts; and

- The Discharger has fully satisfied the requirements of the intergovernmental coordination and public participation provisions of the State's continuing planning process concurrent with the public participation period of this Order.

Table F-8. Summary of Final Effluent Limitations

Parameter	Units	Effluent Limitations				
		Average Monthly	Average Weekly	Maximum Daily	Instantaneous Minimum	Instantaneous Maximum
BOD 5-day @ 20 ° C	~~M~~mg/L	10	15	20	--	--
	Lbs/day[1]	867	1301	1735	--	--
Total Suspended Solids (TSS)	m~~M~~g/L	10	15	20	--	--
	Lbs/day[1]	867	1301	1735	--	--
pH	standard units	--	--	--	6.5	8.5
Ammonia	m~~M~~g/L	0.8~~6~~	--	2.~~0~~2	--	--
~~Oil and Grease~~	~~mMg/L~~	~~10~~	~~--~~	~~15~~	~~--~~	~~--~~
	~~Lbs/day[1]~~	~~867~~	~~--~~	~~1301~~	~~--~~	~~--~~
Selenium	µ~~U~~g/L	3.2	--	9.2	--	--
~~Settable Solids~~	~~MlmL/L~~	~~0.1~~	~~--~~	~~0.2~~	~~--~~	~~--~~

1. Based upon a design treatment capacity of 10.4 mgd.

a. **Percent Removal:** The average monthly percent removal of BOD 5-day 20°C and total suspended solids shall not be less than 85 percent.

b. **Mercury.** The total monthly mass discharge of total mercury shall not exceed 0.088 lbs/month.

c. **Acute Whole Effluent Toxicity.** Survival of aquatic organisms in 96-hour bioassays of undiluted waste shall be no less than:

   i. 70%, minimum for any one bioassay; and
   ii. 90%, median for any three consecutive bioassays.

d. **Total Coliform Organisms.** Effluent total coliform organisms shall not exceed:

   i. 2.2 most probable number (MPN) per 100 mL, as a 7-day median; and
   ii. 23 MPN/100 mL, more than once in any 30-day period; and
   iii. 240 MPN/100 mL, at any time.

e. **Average Daily Discharge Flow.** The Average Daily Discharge Flow shall not exceed 10.4 mgd.

E. Interim Effluent Limitations

1. **Ammonia and Selenium.** The SIP, section 2.2.1, requires that if a compliance schedule is granted for a CTR or NTR constituent, the Regional Water Board shall establish interim requirements and dates for their achievement in the NPDES permit.

The interim limitations must be based on current treatment plant performance or existing permit limitations, whichever is more stringent. The State Water Board has held that the SIP may be used as guidance for non-CTR constituents. Therefore, the SIP requirement for interim effluent limitations has been applied to both CTR and non-CTR constituents in this Order.

The interim limitations for ammonia and selenium in this Order are based on the current treatment plant performance. In developing the interim limitation, where there are ten sampling data points or more, sampling and laboratory variability is accounted for by establishing interim limits that are based on normally distributed data where 99.9% of the data points will lie within 3.3 standard deviations of the mean (*Basic Statistical Methods for Engineers and Scientists, Kennedy and Neville, Harper and Row*). Therefore, the interim limitations in this Order are established as the mean plus 3.3 standard deviations of the available data.

When there are less than ten sampling data points available, the *Technical Support Document for Water Quality- Based Toxics Control* ((EPA/505/2-90-001), TSD) recommends a coefficient of variation of 0.6 be utilized as representative of wastewater effluent sampling. The TSD recognizes that a minimum of ten data points is necessary to conduct a valid statistical analysis. The multipliers contained in Table 5-2 of the TSD are used to determine a maximum daily limitation based on a long-term average objective. In this case, the long-term average objective is to maintain, at a minimum, the current plant performance level. Therefore, when there are less than ten sampling points for a constituent, interim limitations are based on 3.11 times the maximum observed effluent concentration to obtain the daily maximum interim limitation (TSD, Table 5-2).

The Regional Water Board finds that the Discharger can undertake source control and treatment plant measures to maintain compliance with the interim limitations included in this Order. Interim limitations are established when compliance with effluent limitations cannot be achieved by the existing discharge. Discharge of constituents in concentrations in excess of the final effluent limitations, but in compliance with the interim effluent limitations, can significantly degrade water quality and adversely affect the beneficial uses of the receiving stream on a long-term basis. The interim limitations, however, establish an enforceable ceiling concentration until compliance with the effluent limitation can be achieved.

Table 7 summarizes the calculations of the interim effluent limitations for ammonia and selenium:

Table F-9. Interim Effluent Limitation Calculation Summary

Parameter	MEC	Mean	Std. Dev.	# of Samples	Interim Limitation
Ammonia	13000	184	1057	235	3700
Selenium	32	6.1	7.6	14	31

Note: All values are in µg/L.

F. Land Discharge Specifications – Not Applicable

G. Reclamation Specifications – Not Applicable

V. RATIONALE FOR RECEIVING WATER LIMITATIONS

Basin Plan water quality objectives to protect the beneficial uses of surface water and groundwater include numeric objectives and narrative objectives, including objectives for chemical constituents, toxicity, and tastes and odors. The toxicity objective requires that surface water and groundwater be maintained free of toxic substances in concentrations that produce detrimental physiological responses in humans, plants, animals, or aquatic life. The chemical constituent objective requires that surface water and groundwater shall not contain chemical constituents in concentrations that adversely affect any beneficial use or that exceed the maximum contaminant levels (MCLs) in Title 22, CCR. The tastes and odors objective states that surface water and groundwater shall not contain taste- or odor-producing substances in concentrations that cause nuisance or adversely affect beneficial uses. The Basin Plan requires the application of the most stringent objective necessary to ensure that surface water and groundwater do not contain chemical constituents, toxic substances, radionuclides, or taste and odor producing substances in concentrations that adversely affect domestic drinking water supply, agricultural supply, or any other beneficial use.

A. Surface Water

1. CWA section 303(a-c), requires states to adopt water quality standards, including criteria where they are necessary to protect beneficial uses. The Regional Water Board adopted water quality criteria as water quality objectives in the Basin Plan. The Basin Plan states that "*[t]he numerical and narrative water quality objectives define the least stringent standards that the Regional Board will apply to regional waters in order to protect the beneficial uses*." The Basin Plan includes numeric and narrative water quality objectives for various beneficial uses and water bodies. This Order contains Receiving Surface Water Limitations based on the Basin Plan numerical and narrative water quality objectives for biostimulatory substances, chemical constituents, color, dissolved oxygen, floating material, oil and grease, pH, pesticides, radioactivity, salinity, sediment, settleable material, suspended material, tastes and odors, temperature, toxicity, turbidity, and electrical conductivity.

   Numeric Basin Plan objectives for bacteria, dissolved oxygen, pH, temperature, and turbidity are applicable to this discharge and have been incorporated as Receiving Surface Water Limitations. Rational for these numeric receiving surface water limitations are as follows:

   a. **Bacteria.** The Basin Plan includes a water quality objective that "*[I]n water designated for contact recreation (REC-1), the fecal coliform concentration based on a minimum of not less than five samples for any 30-day period shall not exceed a geometric mean of 200/100 ml, nor shall more than ten percent of the total number of samples taken during any 30-day period exceed 400/100 ml*."

Numeric Receiving Water Limitations for bacteria are included in this Order and are based on the Basin Plan objective.

b. **Biostimulatory Substances**. The Basin Plan includes a water quality objective that "*[W]ater shall not contain biostimulatory substances which promote aquatic growths in concentrations that cause nuisance or adversely affect beneficial uses."* Receiving Water Limitations for biostimulatory substances are included in this Order and are based on the Basin Plan objective.

c. **Color**. The Basin Plan includes a water quality objective that "*[W]ater shall be free of discoloration that causes nuisance or adversely affects beneficial uses."* Receiving Water Limitations for color are included in this Order and are based on the Basin Plan objective.

d. **Chemical Constituents**. The Basin Plan includes a water quality objective that *"[W]aters shall not contain chemical constituents in concentrations that adversely affect beneficial uses."* Receiving Water Limitations for chemical constituents are included in this Order and are based on the Basin Plan objective.

e. **Dissolved Oxygen.** The Tule Canal has been designated as having the beneficial use of cold freshwater aquatic habitat (COLD). For water bodies designated as having COLD as a beneficial use, the Basin Plan includes a water quality objective of maintaining a minimum of 7.0 mg/L of dissolved oxygen. Since the beneficial use of COLD does apply to the Tule Canal, a receiving water limitation of 7.0 mg/L for dissolved oxygen was included in this Order.

   For surface water bodies outside of the Delta, the Basin Plan includes the water quality objective that "…*the monthly median of the mean daily dissolved oxygen (DO) concentration shall not fall below 85 percent of saturation in the main water mass, and the 95 percentile concentration shall not fall below 75 percent of saturation.*" This objective was included as a receiving water limitation in this Order.

f. **Floating Material**. The Basin Plan includes a water quality objective that *"[W]ater shall not contain floating material in amounts that cause nuisance or adversely affect beneficial uses."* Receiving Water Limitations for floating material are included in this Order and are based on the Basin Plan objective.

g. **Oil and Grease**. The Basin Plan includes a water quality objective that *"[W]aters shall not contain oils, greases, waxes, or other materials in concentrations that cause nuisance, result in a visible film or coating on the surface of the water or on objects in the water, or otherwise adversely affect beneficial uses."* Receiving Water Limitations for oil and grease are included in this Order and are based on the Basin Plan objective.

h. **pH.** The Basin Plan includes water quality objective that *"[T]he pH shall not be depressed below 6.5 nor raised above 8.5. Changes in normal ambient pH levels shall not exceed 0.5 in fresh waters with designated COLD or WARM*

beneficial uses" This Order includes receiving water limitations for both pH range and pH change.

The Basin Plan allows an appropriate averaging period for pH change in the receiving stream. Since there is no technical information available that indicates that aquatic organisms are adversely affected by shifts in pH within the 6.5 to 8.5 range, an averaging period is considered appropriate and a monthly averaging period for determining compliance with the 0.5 receiving water pH limitation is included in this Order.

i. **Pesticides**. The Basin Plan includes a water quality objective for pesticides beginning on page III-6.00. Receiving Water Limitations for pesticides are included in this Order and are based on the Basin Plan objective.

j. **Radioactivity**. The Basin Plan includes a water quality objective that *"[R]adionuclides shall not be present in concentrations that are harmful to human, plant, animal or aquatic life nor that result in the accumulation of radionuclides in the food web to an extent that presents a hazard to human, plant, animal or aquatic life."* The Basin Plan states further that *"[A]t a minimum, waters designated for use as domestic or municipal supply (MUN) shall not contain concentrations of radionuclides in excess of the maximum contaminant levels (MCLs) specified in Table 4 (MCL Radioactivity) of Section 64443 of Title 22 of the California Code of Regulations…"* Receiving Water Limitations for radioactivity are included in this Order and are based on the Basin Plan objective.

k. **Sediment.** The Basin Plan includes a water quality objective that *"[T]he suspended sediment load and suspended sediment discharge rate of surface waters shall not be altered in such a manner as to cause nuisance or adversely affect beneficial uses"* Receiving Water Limitations for suspended sediments are included in this Order and are based on the Basin Plan objective.

l. **Settleable Material.** The Basin Plan includes a water quality objective that *"[W]aters shall not contain substances in concentrations that result in the deposition of material that causes nuisance or adversely affects beneficial uses."* Receiving Water Limitations for settleable material are included in this Order and are based on the Basin Plan objective.

m. **Suspended Material.** The Basin Plan includes a water quality objective that *"[W]aters shall not contain suspended material in concentrations that cause nuisance or adversely affect beneficial uses."* Receiving Water Limitations for suspended material are included in this Order and are based on the Basin Plan objective.

n. **Taste and Odors**. The Basin Plan includes a water quality objective that *"[W]ater shall not contain taste- or odor-producing substances in concentrations that impart undesirable tastes or odors to domestic or municipal water supplies or to fish flesh or other edible products of aquatic origin, or that cause nuisance, or*

otherwise adversely affect beneficial uses." Receiving Water Limitations for taste- or odor-producing substances are included in this Order and are based on the Basin Plan objective.

o. **Temperature.** The Tule Canal has the beneficial uses of both COLD and WARM. The Basin Plan includes the objective that "[a]*t no time or place shall the temperature of COLD or WARM intrastate waters be increased more than 5ºF above natural receiving water temperature*." This Order includes a receiving water limitation based on this objective.

p. **Toxicity**. The Basin Plan includes a water quality objective that *"[A]ll waters shall be maintained free of toxic substances in concentrations that produce detrimental physiological responses in human, plant, animal, or aquatic life."* Receiving Water Limitations for toxicity are included in this Order and are based on the Basin Plan objective.

q. **Turbidity.** The Basin Plan includes a water quality objective that "*[I]ncreases in turbidity attributable to controllable water quality factors shall not exceed the following limits:*

- *Where natural turbidity is between 0 and 5 Nephelometric Turbidity Units (NTUs), increases shall not exceed 1 NTU.*
- *Where natural turbidity is between 5 and 50 NTUs, increases shall not exceed 20 percent.*
- *Where natural turbidity is between 50 and 100 NTUs, increases shall not exceed 10 NTUs.*
- *Where natural turbidity is greater than 100 NTUs, increases shall not exceed 10 percent*."

A numeric Receiving Surface Water Limitation for turbidity is included in this Order and is based on the Basin Plan objective for turbidity.

B. Groundwater

1. The beneficial uses of the underlying ground water are municipal and domestic supply, industrial service supply, industrial process supply, and agricultural supply.

2. Basin Plan water quality objectives include narrative objectives for chemical constituents, tastes and odors, and toxicity of groundwater. The toxicity objective requires that groundwater be maintained free of toxic substances in concentrations that produce detrimental physiological responses in humans, plants, animals, or aquatic life. The chemical constituent objective states groundwater shall not contain chemical constituents in concentrations that adversely affect any beneficial use. The tastes and odors objective prohibits taste- or odor-producing substances in concentrations that cause nuisance or adversely affect beneficial uses. The Basin Plan also establishes numerical water quality objectives for chemical constituents

and radioactivity in groundwaters designated as municipal supply. These include, at a minimum, compliance with MCLs in Title 22 of the CCR. The bacteria objective prohibits coliform organisms at or above 2.2 MPN/100 ml. The Basin Plan requires the application of the most stringent objective necessary to ensure that waters do not contain chemical constituents, toxic substances, radionuclides, taste- or odor-producing substances, or bacteria in concentrations that adversely affect municipal or domestic supply, agricultural supply, industrial supply or some other beneficial use.

3. Groundwater limitations are required to protect the beneficial uses of the underlying groundwater.

VI. RATIONALE FOR MONITORING AND REPORTING REQUIREMENTS

Section 122.48 requires that all NPDES permits specify requirements for recording and reporting monitoring results. Water Code sections 13267 and 13383 authorizes the Regional Water Board to require technical and monitoring reports. The Monitoring and Reporting Program (MRP), Attachment E of this Order, establishes monitoring and reporting requirements to implement federal and state requirements. The following provides the rationale for the monitoring and reporting requirements contained in the MRP for this facility.

A. Influent Monitoring

1. Influent monitoring is required to collect data on the characteristics of the wastewater and to assess compliance with effluent limitations (*e.g.*, BOD and TSS reduction requirements).

B. Effluent Monitoring

1. Pursuant to the requirements of 40 CFR §122.44(i)(2) effluent monitoring is required for all constituents with effluent limitations. Effluent monitoring is necessary to assess compliance with effluent limitations, assess the effectiveness of the treatment process, and to assess the impacts of the discharge on the receiving stream and groundwater.

2. The SIP states that if "…all reported detection limits of the pollutant in the effluent are greater than or equal to the C [water quality criterion or objective] value, the RWQCB [Regional Water Board] shall establish interim requirements…that require additional monitoring for the pollutant…." All reported detection limits for constituents are greater than or equal to corresponding applicable water quality criteria or objectives. Monitoring for these constituents has been included in this Order in accordance with the SIP.

C. Whole Effluent Toxicity Testing Requirements

1. **Acute Toxicity.** Quarterly 96-hour bioassay testing is required to demonstrate compliance with the effluent limitation for acute toxicity.

2. **Chronic Toxicity.** Quarterly chronic whole effluent toxicity testing is required in order to demonstrate compliance with the Basin Plan's narrative toxicity objective.

D. Receiving Water Monitoring

1. Surface Water

a. Receiving water monitoring is necessary to assess compliance with receiving water limitations and to assess the impacts of the discharge on the receiving stream.

2. Groundwater

a. Section 13267 of the California Water Code states, in part, *"(a) A Regional Water Board, in establishing…waste discharge requirements… may investigate the quality of any waters of the state within its region*" and *"(b) (1) In conducting an investigation…, the Regional Water Board may require that any person who… discharges… waste…that could affect the quality of waters within its region shall furnish, under penalty of perjury, technical or monitoring program reports which the Regional Water Board requires. The burden, including costs, of these reports shall bear a reasonable relationship to the need for the report and the benefits to be obtained from the reports*." The burden, including costs, of these reports shall bear a reasonable relationship to the need for the report and the benefits to be obtained from the reports. In requiring those reports, the Regional Water Board shall provide the person with a written explanation with regard to the need for the reports, and shall identify the evidence that supports requiring that person to provide the reports. The Monitoring and Reporting Program (Attachment E) is issued pursuant to California Water Code Section 13267. The groundwater monitoring and reporting program required by this Order and the Monitoring and Reporting Program are necessary to assure compliance with these waste discharge requirements. The Discharger is responsible for the discharges of waste at the facility subject to this Order.

b. Monitoring of the groundwater must be conducted to determine if the discharge has caused an increase in constituent concentrations, when compared to background. The monitoring must, at a minimum, require a complete assessment of groundwater impacts including the vertical and lateral extent of degradation, an assessment of all wastewater-related constituents which may have migrated to groundwater, an analysis of whether additional or different methods of treatment or control of the discharge are necessary to provide best practicable treatment or control to comply with Resolution No. 68-16. Economic analysis is only one of many factors considered in determining best practicable treatment or control. If monitoring indicates that the discharge has incrementally increased constituent concentrations in groundwater above background, this permit may be reopened and modified. ~~Until groundwater monitoring is sufficient,~~

~~this Order contains Groundwater Limitations that allow groundwater quality to be degraded for certain constituents when compared to background groundwater quality, but not to exceed water quality objectives. If groundwater quality has been degraded by the discharge, the incremental change in pollutant concentration (when compared with background) may not be increased.~~ If groundwater quality has been or may be degraded by the discharge, this Order may be reopened and specific numeric limitations established consistent with Resolution 68-16 and the Basin Plan.

c. This Order requires the Discharger to continue groundwater monitoring and includes a regular schedule of groundwater monitoring in the attached Monitoring and Reporting Program. The groundwater monitoring reports are necessary to evaluate impacts to waters of the State to assure protection of beneficial uses and compliance with Regional Board plans and policies, including Resolution 68-16. Evidence in the record includes effluent monitoring data that indicates the presence of constituents that may degrade groundwater and surface water.

E. Other Monitoring Requirements

1. Biosolids Monitoring

Biosolids monitoring is required to ensure compliance with the biosolids disposal requirements (Special Provisions VI.C.6.a.). Biosolids disposal requirements are imposed pursuant to 40 CFR Part 503 to protect public health and prevent groundwater degradation.

2. Water Supply Monitoring

Water supply monitoring is required to evaluate the source of constituents in the wastewater.

3. Ultraviolet Disinfection System Monitoring

UV System specifications and monitoring and reporting is required to ensure that adequate UV dosage is applied to the wastewater to inactivate pathogens e.g. viruses in the wastewater. UV Disinfection system monitoring are imposed pursuant to requirements established by the California Department of Public Health, (DPH) and the National Water Research Institute (NWRI) and American Water Works Association Research Foundation NWRI/AWWARF's *"Ultraviolet Disinfection Guidelines for Drinking Water and Water Reuse.*

VII. RATIONALE FOR PROVISIONS

A. Standard Provisions

Standard Provisions, which apply to all NPDES permits in accordance with section 122.41, and additional conditions applicable to specified categories of permits in accordance with section 122.42, are provided in Attachment D. The discharger must comply with all standard provisions and with those additional conditions that are applicable under section 122.42.

Section 122.41(a)(1) and (b) through (n) establish conditions that apply to all State-issued NPDES permits. These conditions must be incorporated into the permits either expressly or by reference. If incorporated by reference, a specific citation to the regulations must be included in the Order. Section 123.25(a)(12) allows the state to omit or modify conditions to impose more stringent requirements. In accordance with section 123.25, this Order omits federal conditions that address enforcement authority specified in sections 122.41(j)(5) and (k)(2) because the enforcement authority under the Water Code is more stringent. In lieu of these conditions, this Order incorporates by reference Water Code section 13387(e).

B. Special Provisions

1. Reopener Provisions

a. **Pollution Prevention.** This Order requires the Discharger to prepare pollution prevention plans following CWC section 13263.3(d)(3) for ammonia, boron, copper, cyanide, mercury, and selenium. This reopener provision allows the Regional Water Board to reopen this Order for addition and/or modification of effluent limitations and requirements for these constituents based on a review of the pollution prevention plans.

b. **Whole Effluent Toxicity.** This Order requires the Discharger to investigate the causes of, and identify corrective actions to reduce or eliminate effluent toxicity through a Toxicity Reduction Evaluation (TRE). This Order may be reopened to include a numeric chronic toxicity limitation, a new acute toxicity limitation, and/or a limitation for a specific toxicant identified in the TRE. Additionally, if a numeric chronic toxicity water quality objective is adopted by the State Water Board, this Order may be reopened to include a numeric chronic toxicity limitation based on that objective.

2. Special Studies and Additional Monitoring Requirements

a. **Chronic Whole Effluent Toxicity Requirements.** Basin Plan contains a narrative toxicity objective that states, “All waters shall be maintained free of toxic substances in concentrations that produce detrimental physiological responses in human, plant, animal, or aquatic life.” (Basin Plan at III-8.00.) Adequate WET data is not available to determine if the discharge has reasonable potential to cause or contribute to an in-stream excursion above of the Basin Plan’s narrative toxicity objective. Attachment E of this Order requires Quarterly chronic WET monitoring for demonstration of compliance with the narrative toxicity objective.

In addition to WET monitoring, this provision requires the Discharger to submit to the Regional Water Board an Initial Investigative TRE Work Plan for approval by the Executive Officer, to ensure the Discharger has a plan to immediately move forward with the initial tiers of a TRE, in the event effluent toxicity is encountered in the future. The provision also includes a numeric toxicity monitoring trigger and requirements for accelerated monitoring, as well as, requirements for TRE initiation if a pattern of toxicity is demonstrated.

Monitoring Trigger. A numeric toxicity monitoring trigger of > 1 TUc (where TUc = 100/NOEC) is applied in the provision, because this Order does not allow any dilution for the chronic condition. Therefore, a TRE is triggered when the effluent exhibits a pattern of toxicity at 100% effluent.

Accelerated Monitoring. The provision requires accelerated WET testing when a regular WET test result exceeds the monitoring trigger. The purpose of accelerated monitoring is to determine, in an expedient manner, whether there is a pattern of toxicity before requiring the implementation of a TRE. Due to possible seasonality of the toxicity, the accelerated monitoring should be performed in a timely manner, preferably taking no more than 2 to 3 months to complete.

The provision requires accelerated monitoring consisting of four chronic toxicity tests every two weeks using the species that exhibited toxicity. Guidance regarding accelerated monitoring and TRE initiation is provided in the *Technical Support Document for Water Quality-based Toxics Control, EPA/505/2-90-001, March 1991* (TSD). The TSD at page 118 states, "EPA recommends if toxicity is repeatedly or periodically present at levels above effluent limits more than 20 percent of the time, a TRE should be required." Therefore, four accelerated monitoring tests are required in this provision. If no toxicity is demonstrated in the four accelerated tests, then it demonstrates that toxicity is not present at levels above the monitoring trigger more than 20 percent of the time (only 1 of 5 tests are toxic, including the initial test). However, notwithstanding the accelerated monitoring results, if there is adequate evidence of a pattern of effluent toxicity (i.e. toxicity present exceeding the monitoring trigger more than 20 percent of the time), the Executive Officer may require that the Discharger initiate a TRE.

See the WET Accelerated Monitoring Flow Chart (Figure F-X), below, for further clarification of the accelerated monitoring requirements and for the decision points for determining the need for TRE initiation.

TRE Guidance. The Discharger is required to prepare a TRE Work Plan in accordance with USEPA guidance. Numerous guidance documents are available, as identified below:

- *Toxicity Reduction Evaluation Guidance for Municipal Wastewater Treatment Plants,* (EPA/833B-99/002), August 1999.

- Generalized Methodology for Conducting Industrial TREs*, (EPA/600/2-88/070), April 1989.*

- *Methods for Aquatic Toxicity Identification Evaluations: Phase I Toxicity Characterization Procedures,* Second Edition, EPA 600/6-91/005F, February 1991.

- *Toxicity Identification Evaluation: Characterization of Chronically Toxic Effluents, Phase I*, EPA 600/6-91/005F, May 1992.

- *Methods for Aquatic Toxicity Identification Evaluations: Phase II Toxicity Identification Procedures for Samples Exhibiting acute and Chronic Toxicity,* Second Edition, EPA 600/R-92/080, September 1993.

- *Methods for Aquatic Toxicity Identification Evaluations: Phase III Toxicity Confirmation Procedures for Samples Exhibiting Acute and Chronic Toxicity*, Second Edition, EPA 600/R-92/081, September 1993.

- *Methods for Measuring the Acute Toxicity of Effluents and Receiving Waters to Freshwater and Marine Organisms*, Fifth Edition, EPA-821-R-02-012, October 2002.

- *Short-term Methods for Estimating the Chronic Toxicity of Effluents and Receiving Waters to Freshwater Organisms*, Fourth Edition, EPA-821-R-02-013, October 2002.

- *Technical Support Document for Water Quality-based Toxics Control, EPA/505/2-90-001, March 1991*

Figure F-3
WET Accelerated Monitoring Flow Chart

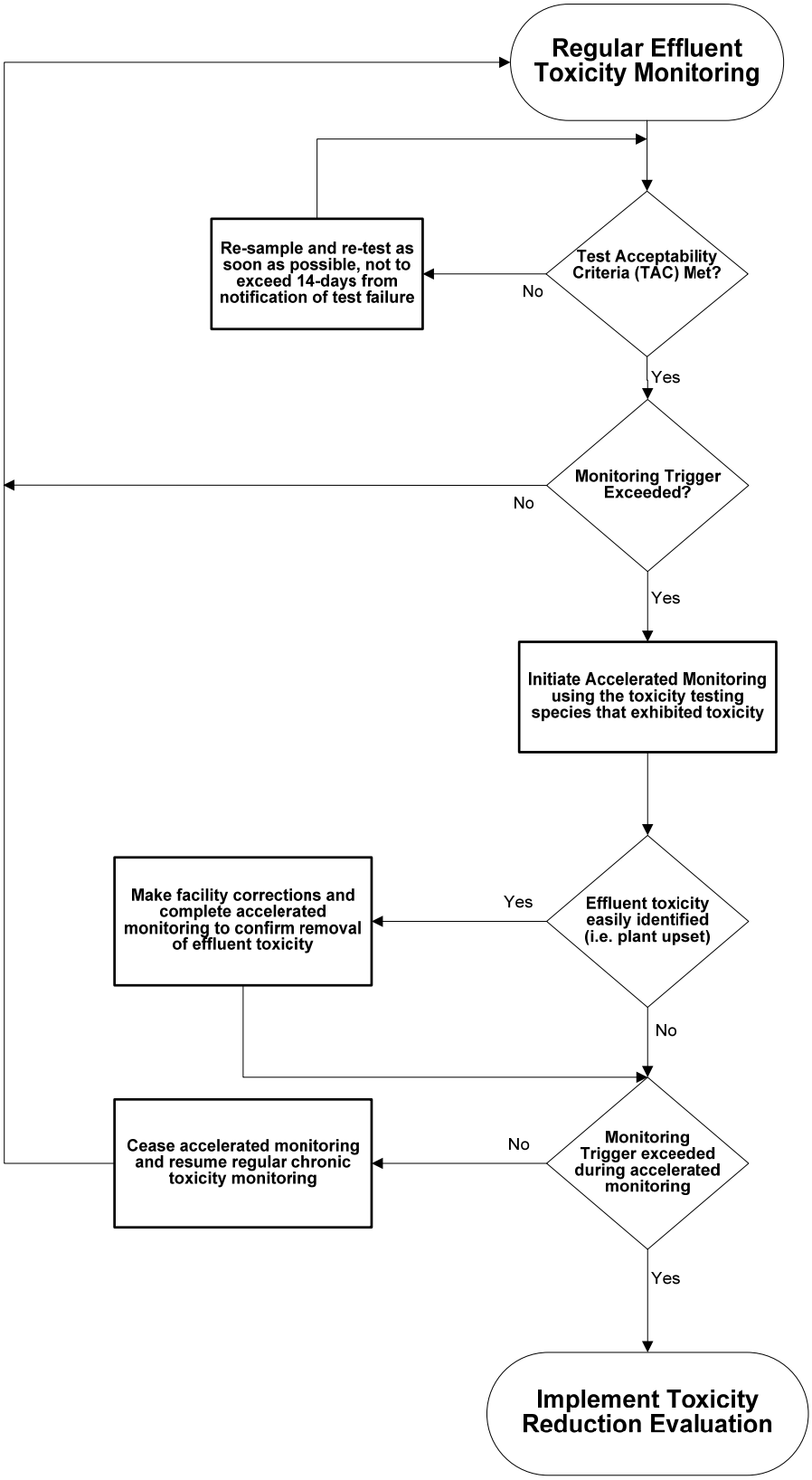

b. **Groundwater Monitoring (Special Provisions VI.C.2.d.).** To determine compliance with Groundwater Limitations V.B., the Discharger has recently expanded its groundwater monitoring network and has completed the technical report, entitled City of Woodland Hydrogeologic Evaluation Report, July 2008 by ECO:LOGIC Engineering. The analysis indicates that the WPCF pond system appears to increase the salinity in the downgradient monitoring wells above background water quality. The Discharger shall submit a technical report which assesses the WPCF and potable water system components with respect to BPTC and minimizes the WPCF's impact on groundwater quality.

3. Best Management Practices and Pollution Prevention

a. **Salinity Evaluation and Minimization Plan.** In accordance with 40 CFR §122.44(k), the Discharger is required to implement best management practices to reduce the discharge of salinity to the Tule Canal. Particularly an Evaluation and Minimization Plan for salinity is required in this Order to ensure adequate measures are developed and implemented by the Discharger.

b. **CWC section 13263.3(d)(3) Pollution Prevention Plans.** The pollution prevention plans required for ammonia and selenium shall, at minimum, meet the requirements outlined in CWC section 13263.3(d)(3). The minimum requirements for the pollution prevention plans include the following:

i. An estimate of all of the sources of pollutant contributing, or potentially contributing, to the loadings of a pollutant in the treatment plant influent.

ii. n analysis of the methods that could be used to prevent the discharge of the pollutants into the Facility, including application of local limits to industrial or commercial dischargers regarding pollution prevention techniques, public education and outreach, or other innovative and alternative approaches to reduce discharges of the pollutant to the Facility. The analysis also shall identify sources, or potential sources, not within the ability or authority of the Discharger to control, such as pollutants in the potable water supply, airborne pollutants, pharmaceuticals, or pesticides, and estimate the magnitude of those sources, to the extent feasible.

iii. An estimate of load reductions that may be attained through the methods identified in subparagraph ii.

iv. A plan for monitoring the results of the pollution prevention program.

v. A description of the tasks, cost, and time required to investigate and implement various elements in the pollution prevention plan.

vi. A statement of the Discharger's pollution prevention goals and strategies, including priorities for short-term and long-term action, and a description of

the Discharger's intended pollution prevention activities for the immediate future.

vii. A description of the Discharger's existing pollution prevention programs.

viii. An analysis, to the extent feasible, of any adverse environmental impacts, including cross-media impacts or substitute chemicals that may result from the implementation of the pollution prevention program.

ix. An analysis, to the extent feasible, of the costs and benefits that may be incurred to implement the pollution prevention program.

4. Construction, Operation, and Maintenance Specifications

a. Ultraviolet Disinfection (UV) System Operating Specifications

UV System specifications and monitoring and reporting is required when the system becomes operational to ensure that adequate UV dosage is applied to the wastewater to inactivate pathogens e.g. viruses in the wastewater. UV dosage is dependent on several factors such as UV transmittance, UV power setting, wastewater turbidity, and wastewater flow through the UV System. Monitoring and reporting of these parameters is necessary to determine compliance with minimum dosage requirements established by the California Department of Public Health, (DPH) and the National Water Research Institute (NWRI) and American Water Works Association Research Foundation NWRI/AWWARF's *"Ultraviolet Disinfection Guidelines for Drinking Water and Water Reuse"* first published in December 2000 revised as a Second Edition dated May 2003. In addition, a Memorandum dated 1 November 2004 issued by DPH to Regional Board executive officers recommended that provisions be included in permits to water recycling treatment plants employing UV disinfection requiring Dischargers to establish fixed cleaning frequency of quartz sleeves as well as include provisions that specify minimum delivered UV dose that must be maintained (as recommended by the NWRI/AWWARF UV Disinfection Guidelines).

Turbidity is included as an operational specification as an indicator of the effectiveness of the treatment process and to assure compliance with effluent coliform limitations. The tertiary treatment process, is capable of reliably meeting a turbidity limitation of 2 nephelometric turbidity units (NTU) as a daily average. Failure of the treatment system such that virus removal is impaired would normally result in increased particles in the effluent, which result in higher effluent turbidity and could impact UV dosage. Turbidity has a major advantage for monitoring filter performance, allowing immediate detection of filter failure and rapid corrective action. The operational specification requires that turbidity prior to disinfection shall not exceed 2 NTU as a daily average; 5 NTU, more than 5% of the time within a 24-hour period, and an instantaneous maximum of 10 NTU.

Minimum UV dosage and turbidity specifications are included as operating criteria in Special Provisions, Section V1.C.5 and Monitoring and Reporting requirements, Attachment E, Section IX.B., to ensure that adequate disinfection of wastewater is achieve.

5. Special Provisions for Municipal Facilities (POTWs Only)

a. **Pretreatment Requirements.**

i. The Federal Clean Water Act, Section 307(b), and Federal Regulations, 40 CFR Part 403, require publicly owned treatment works to develop an acceptable industrial pretreatment program. A pretreatment program is required to prevent the introduction of pollutants, which will interfere with treatment plant operations or sludge disposal, and prevent pass through of pollutants that exceed water quality objectives, standards or permit limitations. Pretreatment requirements are imposed pursuant to 40 CFR Part 403.

ii. The Discharger shall implement and enforce its approved pretreatment program and is an enforceable condition of this Order. If the Discharger fails to perform the pretreatment functions, the Regional Water Board, the State Water Board or the U.S. EPA may take enforcement actions against the Discharger as authorized by the CWA.

6. Other Special Provisions

7. Compliance Schedules

The use and location of compliances schedules in the permit depends on the Discharger's ability to comply and the source of the applied water quality criteria.

a. The Discharger submitted a request, and justification, within 90 days of the effective date of this Order, for a compliance schedule for ammonia. The compliance schedule justification included all items specified in Paragraph 3, items (a) through (d), of Section 2.1 of the SIP. This Order establishes a compliance schedule for the new, final, water quality-based effluent limitations for ammonia and requires full compliance by 18 May 2010~~five years from the effective date of this Order~~.

b. The Discharger submitted a request, and justification, within 90 days of the effective date of this Order**,** for a compliance schedule for selenium. The compliance schedule justification included all items specified in Paragraph 3, items (a) through (d), of Section 2.1 of the SIP. This Order establishes a compliance schedule for the new, final, water quality-based effluent limitations for selenium and requires full compliance by 18 May 2010.

VIII. PUBLIC PARTICIPATION

The California Regional Water Quality Control Board, Central Valley Region (Regional Water Board) is considering the issuance of waste discharge requirements (WDRs) that will serve as a National Pollutant Discharge Elimination System (NPDES) permit for City of Woodland Water Pollution Control Facility. As a step in the WDR adoption process, the Regional Water Board staff has developed tentative WDRs. The Regional Water Board encourages public participation in the WDR adoption process.

A. Notification of Interested Parties

The Regional Water Board has notified the Discharger and interested agencies and persons of its intent to prescribe waste discharge requirements for the discharge and has provided them with an opportunity to submit their written comments and recommendations. Notification was provided through by posting in public areas (the nearest courthouse or city hall, the post office nearest the Facility, and near the entrance of the Facility by 5 September 2008.

B. Written Comments

The staff determinations are tentative. Interested persons are invited to submit written comments concerning these tentative WDRs. Comments must be submitted either in person or by mail to the Executive Office at the Regional Water Board at the address above on the cover page of this Order.

To be fully responded to by staff and considered by the Regional Water Board, written comments should be received at the Regional Water Board offices by 5:00 p.m. on 6 October 2008.

C. Public Hearing

The Regional Water Board will hold a public hearing on the tentative WDRs during its regular Board meeting on the following date and time and at the following location:

Date: ~~23/24 October 2008~~5 February 2009
Time: 8:30 am
Location: Regional Water Quality Control Board, Central Valley Region
11020 Sun Center Dr., Suite #200
Rancho Cordova, CA 95670

Interested persons are invited to attend. At the public hearing, the Regional Water Board will hear testimony, if any, pertinent to the discharge, WDRs, and permit. Oral testimony will be heard; however, for accuracy of the record, important testimony should be in writing.

Please be aware that dates and venues may change. Our Web address is http://www.waterboards.ca.gov/centralvalley/ where you can access the current agenda for changes in dates and locations.

D. Waste Discharge Requirements Petitions

Any aggrieved person may petition the State Water Resources Control Board to review the decision of the Regional Water Board regarding the final WDRs. The petition must be submitted within 30 days of the Regional Water Board's action to the following address:

State Water Resources Control Board
Office of Chief Counsel
P.O. Box 100, 1001 I Street
Sacramento, CA 95812-0100

E. Information and Copying

The Report of Waste Discharge (RWD), related documents, tentative effluent limitations and special provisions, comments received, and other information are on file and may be inspected at the address above at any time between 8:30 a.m. and 4:45 p.m., Monday through Friday. Copying of documents may be arranged through the Regional Water Board by calling 916-464-3291.

F. Register of Interested Persons

Any person interested in being placed on the mailing list for information regarding the WDRs and NPDES permit should contact the Regional Water Board, reference this facility, and provide a name, address, and phone number.

G. Additional Information

Requests for additional information or questions regarding this order should be directed to Ken Landau at 916-464-4726.