CALIFORNIA REGIONAL WATER QUALITY CONTROL BOARD
CENTRAL VALLEY REGION

1685 E Street, Fresno, California 93706
Phone (559) 445-5116 • FAX (559) 445-5910
http://www.waterboards.ca.gov/centralvalley

ORDER NO. R5-2008-XXXX
NPDES NO. CA0085235

WASTE DISCHARGE REQUIREMENTS AND MASTER RECLAMATION PERMIT FOR THE CITY OF CLOVIS CLOVIS SEWAGE TREATMENT AND WATER REUSE FACILITY FRESNO COUNTY

The following Discharger is subject to waste discharge requirements as set forth in this Order:

Table 1. Discharger Information

Discharger	City of Clovis
Name of Facility	Clovis Sewage Treatment and Water Reuse Facility
Facility Address	9700 East Ashlan Avenue
	Clovis, CA 93619
The U.S. Environmental Protection Agency (USEPA) and the Regional Water Quality Control Board have classified this discharge as a **major** discharge.	

For the discharge identified below:

Table 2. Discharge Location

Discharge Point	Effluent Description	Discharge Point Latitude	Discharge Point Longitude	Receiving Water
001	Disinfected Tertiary, Municipal Wastewater	36º 45’ 39” N	119º 37’ 40.4” W	Fancher Creek
002	Disinfected Tertiary, Municipal Wastewater	36º 53’ 24” N	119º 39’ 56.3” W	Diversion Channel from Big Dry Creek Reservoir to Little Dry Creek
REC-001	Disinfected Tertiary, Municipal Wastewater	--	--	Groundwater underlying recycled water use sites

Table 3. Administrative Information

This Order was adopted by the Regional Water Quality Control Board on:	**<13/14 March 2008>**
This Order shall become effective on:	**<50 days following adoption date if permit is contested, otherwise permit adoption date>**
This Order shall expire on:	**<5 years after effective date>**
The Discharger shall file a Report of Waste Discharge in accordance with Title 23, California Code of Regulations, as application for issuance of new waste discharge requirements no later than:	**<180 days prior to the Order expiration date>**

IT IS HEREBY ORDERED, that in order to meet the provisions contained in division 7 of the California Water Code (commencing with section 13000) and regulations adopted

thereunder and the provisions of the federal Clean Water Act (CWA) and regulations and guidelines adopted thereunder, the Discharger shall comply with the requirements in this Order.

I, PAMELA C. CREEDON, Executive Officer, do hereby certify that this Order with all attachments is a full, true, and correct copy of an Order adopted by the California Regional Water Quality Control Board, Central Valley Region, on **<13/14 March 2008>**.

_____

PAMELA C. CREEDON, Executive Officer

Table of Contents

I. Facility Information 1
II. Findings 1
III. Discharge Prohibitions 9
IV. Effluent Limitations and Discharge Specifications 10
A. Effluent Limitations – Discharge Points 001 and 002 10
1. Final Effluent Limitations - Discharge Points 001 and 002 10
2. Interim Effluent Limitations – NOT APPLICABLE 11
B. Land Discharge Specifications – NOT APPLICABLE 11
C. Reclamation Specifications – Discharge Point REC-001 11
D. Flow Specifications 14
V. Receiving Water Limitations 14
A. Surface Water Limitations 14
B. Groundwater Limitations 19
VI. Provisions 19
A. Standard Provisions 19
B. Monitoring and Reporting Program (MRP) Requirements 23
C. Special Provisions 23
1. Reopener Provisions 23
2. Special Studies, Technical Reports and Additional Monitoring Requirements 25
3. Best Management Practices and Pollution Prevention 28
4. Construction, Operation and Maintenance Specifications 28
5. Special Provisions for Municipal Facilities (POTWs Only) 29
6. Other Special Provisions 32
7. Compliance Schedules – NOT APPLICABLE 33
8. Master Reclamation Permit Provisions 33
VII. Compliance Determination 35

List of Tables

Table 1. Discharger Information ..... Cover
Table 2. Discharge Location ..... Cover
Table 3. Administrative Information ..... Cover
Table 4. Facility Information 1
Table 5. Basin Plan Beneficial Uses 5
Table 6. Effluent Limitations – Discharge Points 001 and 002 10
Table 7. Recycled Water Limitations 13

List of Attachments

Attachment A – Definitions A-1
Attachment B – Map B-1
Attachment C – Flow Schematic C-1
Attachment D – Standard Provisions D-1
Attachment E – Monitoring and Reporting Program (MRP) E-1
Attachment F – Fact Sheet F-1
Attachment G – Recycled Water Signage G-1

I. FACILITY INFORMATION

The following Discharger is subject to waste discharge requirements as set forth in this Order:

Table 4. Facility Information

Discharger	City of Clovis
Name of Facility	Clovis Sewage Treatment / Water Reuse Facility (ST/WRF)
Facility Address	9700 East Ashlan Avenue
	Clovis, CA 93619
Facility Contact, Title, and Phone	Ms. Lisa Koehn, Assistant Public Utilities Director, 559-324-2607
Mailing Address	City of Clovis, 155 N. Sunnyside Avenue, Clovis, CA 93611
Type of Facility	Publicly Owned Treatment Works (POTW)
Facility Design Flow	Phase I - 2.8 million gallons per day (MGD) / Phase II – 5.6 MGD (Average Annual) Phase I – 3.1 MGD / Phase II – 6.2 MGD (Average Monthly)

II. FINDINGS

The California Regional Water Quality Control Board, Central Valley Region (hereinafter Regional Water Board), finds:

A. Background. The City of Clovis (hereinafter Discharger or City) submitted a Report of Waste Discharge, dated 23 November 2004**,** and applied for a National Pollutant Discharge Elimination System (NPDES) permit authorization to discharge up to 8.4 MGD of treated wastewater from its Sewage Treatment / Water Reuse Facility (hereinafter ST/WRF) with an initial discharge of 2.8 MGD for Phase I, an additional discharge of 2.8 MGD for Phase II, and an additional discharge of 2.8 MGD for Phase III. For this permit, the Discharger has requested discharge for Phases I and II, which equals 5.6 MGD of tertiary treated domestic wastewater from the ST/WRF. The Discharger's application was deemed complete on 21 December 2004. The City's population of 89,924 is projected to grow significantly in the coming years. The City's sewage is currently conveyed to the Fresno-Clovis Regional Wastewater Treatment Facility, a secondary wastewater treatment facility in southwest Fresno approximately 19 miles from the City of Clovis' city center. For the City to accommodate the growth and housing needs projected in the City's General Plan Housing Element Update (2002), significant additional sewer capacity will be needed. Growth is projected in particular for the northwest, northeast, and southeast areas of the City. The current practice of temporary "exchange" of sewer trunk capacity with the City of Fresno will only allow for limited, short-term service expansion and thus insufficient to meet the City's long-term needs. On 6 April 2005, the Regional Water Board requested, pursuant to Section 13267 of the California Water Code (CWC), that the Discharger submit monitoring data to implement the State Water Resources Control Board's (State Water Board) *Policy for Implementation of Toxics Standards for Inland Surface Waters, Enclosed Bays, and Estuaries of California* (State Implementation Policy or SIP). The Discharger collected the requested data and submitted a report to the Regional Water

Board on 30 June 2005. The Discharger collected additional receiving water data and provided it to the Regional Water Board on 31 October 2006. The Discharger completed an Environmental Impact Report (EIR) for the 8.4 MGD ST/WRF, its recycled water distribution system, and proposed outfalls to Fancher Creek and the diversion channel from Big Dry Creek Reservoir to Little Dry Creek (hereinafter Diversion Channel), thus satisfying the City's requirements under the California Environmental Quality Act (CEQA). The City has contracted with CH2M Hill to design, build and operate the ST/WRF.

For the purposes of this Order, references to the "discharger" or "permittee" in applicable federal and state laws, regulations, plans, or policy are held to be equivalent to references to the Discharger herein.

B. Facility Description. The Discharger owns the ST/WRF, as well as the collection system, all hereinafter "Facility." The Discharger has contracted with CH2M Hill to design, build, and operate the ST/WRF. The treatment structures consist of headworks with screens, a cyclone to remove grit and settleable materials (acting as primary treatment), an anaerobic and aerobic treatment tank (acting as secondary treatment), and membrane filtration units (acting as tertiary treatment). The tertiary treated effluent will be disinfected by ultraviolet radiation. Odors will be captured throughout the process and recycled into the aerobic treatment tank or into the final biological odor treatment beds. The disinfected tertiary treated effluent produced at the ST/WRF will be stored in bolted-steel tanks for use as recycled water. With the completion of the first phase of the ST/WRF (i.e., 2.8 MGD), the City will utilize a 3.08 million gallon bolted-steel tank. A second 3.08 million gallon bolted-steel tank will be added with the completion of Phase II. Tertiary treated effluent used for recycled water will be pumped to the City's recycled water distribution system. Recycled water uses will be subject to the Master Reclamation Permit provisions contained in this Order. Biosolids produced by the ST/WRF will be disposed of at an offsite Class B Solids Disposal Facility, or treated further at an offsite composting facility. Disinfected tertiary treated effluent not used for recycled water landscape irrigation purposes will be discharged to surface water from Discharge Point 001 to Fancher Creek and/or from Discharge Point 002 to the Diversion Channel. Wastewater discharged to Discharge Point 001, Fancher Creek, is a discharge to a Valley Floor Water, a water of the U.S. Wastewater discharged to Discharge Point 002, the Diversion Channel, flows to Little Dry Creek, which is tributary to the San Joaquin River. The San Joaquin River is a water of the U.S. Attachment B is a map of the area around the ST/WRF. Attachment C is a flow schematic of the ST/WRF.

C. Legal Authorities. This Order is issued pursuant to section 402 of the federal Clean Water Act (CWA) and implementing regulations adopted by the U.S. Environmental Protection Agency (USEPA) and chapter 5.5, division 7 of the California Water Code (commencing with section 13370). It shall serve as a NPDES permit for point source discharges from this facility to surface waters. This Order also serves as Waste Discharge Requirements (WDRs) pursuant to article 4, chapter 4, division 7 of the CWC (commencing with section 13260) and contains Master Reclamation Permit provisions pursuant to article 4, chapter 7, division 7 of the CWC (section 13523.1).

D. Background and Rationale for Requirements. Requirements in this Order are based on information submitted as part of the application, through monitoring and reporting programs, and other available information. The Fact Sheet (Attachment F), which contains background information and rationale for Order requirements, is hereby incorporated into this Order and constitutes part of the Findings for this Order. Attachments A through E and G are also incorporated into this Order.

E. California Environmental Quality Act (CEQA). Pursuant to CEQA (Public Resources Code section 21000, et seq.), every new project must be reviewed for potential and significant environmental effects by a lead agency. When the Regional Water Board is not the lead agency, it must as the responsible agency for water quality, provide comment to the lead agency as well as ensure during permitting that significant effects on water quality are mitigated. The City certified a final environmental impact report (EIR) for the ST/WRF in accordance with CEQA, and the project as altered and approved by the City will not have a significant effect on water quality. A detailed discussion of this Order consistency with CEQA is included in the Fact Sheet (Attachment F).

F. Technology-based Effluent Limitations. Section 301(b) of the CWA and implementing USEPA permit regulations at section 122.44, Title 40 of the Code of Federal Regulations (CFR) require that permits include conditions meeting applicable technology-based requirements at a minimum, and any more stringent effluent limitations necessary to meet applicable water quality standards. The discharge authorized by this Order must meet minimum federal technology-based requirements based on Secondary Treatment Standards at 40 CFR part 133 and Best Professional Judgment (BPJ) in accordance with 40 CFR part 125, section 125.3. A detailed discussion of the technology-based effluent limitations development is included in the Fact Sheet (Attachment F).

G. Water Quality-based Effluent Limitations. Section 301(b) of the CWA and 40 CFR section 122.44(d) require that permits include limitations more stringent than applicable federal technology-based requirements where necessary to achieve applicable water quality standards. This Order contains requirements, expressed as a technology equivalence requirement, more stringent than secondary treatment requirements that are necessary to meet applicable water quality standards. Factors listed in CWC Section 13241 were considered in establishing these requirements. The rationale for these requirements, which consist of tertiary treatment or equivalent requirements, is presented in the Fact Sheet.

40 CFR section 122.44(d)(1)(i) mandates that permits include effluent limitations for all pollutants that are or may be discharged at levels that have the reasonable potential to cause or contribute to an exceedance of a water quality standard, including numeric and narrative objectives within a standard. Where reasonable potential has been established for a pollutant, but there is no numeric criterion or objective for the pollutant, water quality-based effluent limitations (WQBELs) must be established using: (1) USEPA criteria guidance under CWA section 304(a), supplemented where necessary by other relevant information; (2) an indicator parameter for the pollutant of concern; or (3) a calculated numeric water quality criterion, such as a proposed State criterion or

policy interpreting the State's narrative criterion, supplemented with other relevant information, as provided in 40 CFR section 122.44(d)(1)(vi).

H. Water Quality Control Plans. The *Water Quality Control Plan for the Sacramento and San Joaquin River Basins, Fourth Edition (revised October 2007)* (hereinafter Sacramento-San Joaquin Rivers Basin Plan) and the *Water Quality Control Plan for the Tulare Lake Basin, Second Edition (revised January 2004)* (hereinafter Tulare Lake Basin Plan) (collectively hereinafter Basin Plans) designate beneficial uses, establish water quality objectives, and contain implementation programs and policies to achieve those objectives for all waters addressed through the plan.

Designated beneficial uses are not specifically listed in the Basin Plans for the Diversion Channel. The Diversion Channel is a constructed conveyance that is periodically used to divert water from Big Dry Creek Reservoir to Little Dry Creek. The designated beneficial uses of Big Dry Creek, as a Valley Floor Water, are listed in the Tulare Lake Basin Plan and summarized in Table 5 of this Order. As the source of the water being diverted, it is reasonable to apply beneficial uses for the Diversion Channel consistent with the waters of Big Dry Creek.

The Sacramento - San Joaquin Rivers Basin Plan at page II-2.00 states that the "…*beneficial uses of any specifically identified water body generally apply to its tributary streams*." The Sacramento-San Joaquin Rivers Basin Plan does not specifically identify beneficial uses for Little Dry Creek, but does identify present and potential uses for the San Joaquin River, to which Little Dry Creek is an ephemeral tributary. These beneficial uses are listed for Little Dry Creek in Table 5 of this Order, and discharges to the Diversion Channel must be protective of these beneficial uses.

Fancher Creek, at Discharge Point 001, is a modified natural creek (i.e., canal) used and managed by the Fresno Irrigation District to convey irrigation water. The Tulare Lake Basin Plan designates beneficial uses for a group of waterways classified as Valley Floor Waters. Fancher Creek is a Valley Floor Water and thus has designated beneficial uses as summarized in Table 5 of this Order.

The Tulare Lake Basin Plan also designates beneficial uses for groundwater underlying Discharge Points 001, 002, and REC-001. Groundwater underlying these points is in Detailed Analysis Unit (DAU) #233 and #234 of the Kings Basin. The beneficial uses of groundwater for these DAUs are also listed in Table 5 of this Order.

Thus, as described in detail in the Fact Sheet, beneficial uses applicable to Fancher Creek, the Diversion Channel, Little Dry Creek, and groundwater are as follows:

Table 5. Basin Plan Beneficial Uses

Discharge Point	Receiving Water Name	Beneficial Use(s)
001	**Fancher Creek (Valley Floor Water, Tulare Lake Basin Plan)**	Agricultural supply (AGR); industrial service supply (IND); industrial process supply (PRO); water contact (REC-1) and non-contact water (REC-2) recreation; warm freshwater habitat (WARM); wildlife habitat (WILD); preservation of rare, threatened or endangered species (RARE); and, groundwater recharge (GWR).
002	**Diversion Channel from Big Dry Creek Reservoir to Little Dry Creek** **Little Dry Creek (Sacramento-San Joaquin Rivers Basin Plan)**	AGR; IND; PRO; REC-1 and REC-2; WARM; WILD; RARE; and GWR. Existing: Municipal and domestic supply (MUN); AGR; PRO; REC-1 and REC-2; WARM; cold freshwater habitat (COLD); freshwater migration for both warm and cold aquatic species (MIGR); spawning, reproduction, and/or early development for warm aquatic species (SPWN); and WILD.
001 **002** **REC-001**	**Groundwater** **(DAU #233 and #234)**	DAU #233: MUN; AGR; IND; PRO; REC-1 and REC-2 DAU #234: MUN; AGR; and IND

The Basin Plans include a list of Water Quality Limited Segments (WQLSs), which are defined as "…*those sections of lakes, streams, rivers or other fresh water bodies where water quality does not meet (or is not expected to meet) water quality standards even after the application of appropriate limitations for point sources (40 CFR 130, et seq.)*." The Basin Plans also state, "*Additional treatment beyond minimum federal standards will be imposed on dischargers to WQLSs. Dischargers will be assigned or allocated a maximum allowable load of critical pollutants so that water quality objectives can be met in the segment.*" The Diversion Channel, Little Dry Creek, and Fancher Creek are not listed as WQLSs in the 303(d) list of impaired water bodies. However, Little Dry Creek is tributary to the San Joaquin River , which is listed as WQLS for exotic species from Friant Dam to Mendota Pool. Segments of the San Joaquin River downstream of the Mendota Pool are listed as WQLS for boron, chlorpyrifos, diazinon, DDT, Group A Pesticides, electrical conductivity, mercury and unknown toxicity. This Order includes effluent limitations for electrical conductivity.

Requirements of this Order implement the Tulare Lake Basin Plan and the Sacramento-San Joaquin Rivers Basin Plan.

I. **National Toxics Rule (NTR) and California Toxics Rule (CTR).** USEPA adopted the NTR on December 22, 1992, and later amended it on May 4, 1995 and November 9, 1999. About forty criteria in the NTR applied in California. On May 18, 2000, USEPA adopted the CTR. The CTR promulgated new toxics criteria for California and, in addition, incorporated the previously adopted NTR criteria that were applicable in the state. The CTR was amended on February 13, 2001. These rules contain water quality criteria for priority pollutants.

J. **State Implementation Policy.** On March 2, 2000, the State Water Board adopted the SIP. The SIP became effective on April 28, 2000 with respect to the priority pollutant criteria promulgated for California by the USEPA through the NTR and to the priority pollutant objectives established by the Regional Water Board in the Basin Plans. The SIP became effective on May 18, 2000 with respect to the priority pollutant criteria promulgated by the USEPA through the CTR. The State Water Board adopted amendments to the SIP on February 24, 2005 that became effective on July 13, 2005. The SIP establishes implementation provisions for priority pollutant criteria and objectives and provisions for chronic toxicity control. Requirements of this Order implement the SIP.

K. **Compliance Schedules and Interim Requirements.** In general, an NPDES permit must include final effluent limitations that are consistent with CWA section 301 and with 40 CFR 122.44(d). There are exceptions to this general rule, but these exceptions do not apply to a new discharge.

L. **Alaska Rule.** On March 30, 2000, USEPA revised its regulation that specifies when new and revised state and tribal water quality standards (WQS) become effective for CWA purposes. (40 C.F.R. § 131.21; 65 Fed. Reg. 24641 (April 27, 2000).) Under the revised regulation (also known as the Alaska rule), new and revised standards submitted to USEPA after May 30, 2000, must be approved by USEPA before being used for CWA purposes. The final rule also provides that standards already in effect and submitted to USEPA by May 30, 2000 may be used for CWA purposes, whether or not approved by USEPA.

M. **Stringency of Requirements for Individual Pollutants.** This Order contains both technology-based and water quality-based effluent limitations for individual pollutants. The technology-based effluent limitations consist of restrictions on BOD_5, TSS, settleable solids, ammonia, and total nitrogen. The water quality-based effluent limitations consist of restrictions on pH, total residual chlorine, electrical conductivity, turbidity and pathogens. This Order's technology-based pollutant restrictions implement the minimum, applicable federal technology-based requirements. In addition, this Order contains effluent limitations more stringent than the minimum, federal technology-based requirements that are necessary to meet water quality standards. These limitations are more stringent than required by the CWA. Specifically, this Order includes effluent limitations for BOD, TSS, settleable solids, total nitrogen, turbidity and pathogens that are more stringent than applicable federal standards, but that are nonetheless necessary to meet numeric objectives or protect beneficial uses. The rationale for including these limitations is explained in the Fact Sheet. In addition, the factors in CWC Section 13241 were considered in establishing these requirements.

Water quality-based effluent limitations have been scientifically derived to implement water quality objectives that protect beneficial uses. Both the beneficial uses and the water quality objectives have been approved pursuant to federal law and are the applicable federal water quality standards. To the extent that toxic pollutant water quality-based effluent limitations were derived from the CTR, the CTR is the applicable standard pursuant to 40 CFR section 131.38. The scientific procedures for calculating the individual water quality-based effluent limitations are based on the CTR-SIP, which was approved by USEPA on May 1, 2001. All beneficial uses and water quality objectives contained in the Basin Plans were approved under state law and submitted to and approved by USEPA prior to May 30, 2000. Any water quality objectives and beneficial uses submitted to USEPA prior to May 30, 2000, but not approved by USEPA before that date, are nonetheless "*applicable water quality standards for purposes of the [Clean Water] Act*" pursuant to 40 CFR section 131.21(c)(1). Collectively, this Order's restrictions on individual pollutants are no more stringent than required to implement the technology-based requirements of the CWA and the applicable water quality standards for purposes of the CWA.

N. Antidegradation Policy. 40 CFR section 131.12 requires that the state water quality standards include an antidegradation policy consistent with the federal policy. The State Water Board established California's antidegradation policy in State Water Board Resolution No. 68-16. Resolution No. 68-16 is consistent with the federal antidegradation policy where the federal policy applies under federal law. Resolution No. 68-16 requires that existing quality of waters be maintained unless degradation is justified based on specific findings. The Basin Plans implement, and incorporate by reference, both the state and federal antidegradation policies. The Discharger submitted an Antidegradation Analysis Report in accordance with the antidegradation provision of 40 CFR section 131.12 and State Water Board Resolution No. 68-16. The Discharger proposes disinfected tertiary treatment technology and to reclaim treated wastewater as the means of minimizing degradation and maximizing use of recycled water. Based upon the facts and analytical reasoning set forth in the Fact Sheet, the permitted discharge is consistent with the antidegradation provisions of 40 CFR section 131.12 and State Water Board Resolution No. 68-16.

O. Anti-Backsliding Requirements. Sections 402(o)(2) and 303(d)(4) of the CWA and 40 CFR section 122.44(l) prohibit backsliding in NPDES permits. As this Order permits a new discharge (i.e. not a reissued permit), anti-backsliding provisions do not apply.

P. Monitoring and Reporting. 40 CFR section 122.48 requires that all NPDES permits specify requirements for recording and reporting monitoring results. CWC Sections 13267 and 13383 authorize the Regional Water Board to require technical and monitoring reports. The Monitoring and Reporting Program in Attachment E establishes monitoring and reporting requirements to implement federal and State requirements.

Q. Standard and Special Provisions. Standard Provisions, which apply to all NPDES permits in accordance with 40 CFR section 122.41, and additional conditions applicable to specified categories of permits in accordance with 40 CFR section 122.42, are in Attachment D. The Discharger must comply with all standard provisions and with those

additional conditions that are applicable to it under 40 CFR section 122.42. This Order also includes special provisions applicable to the Discharger. Rationale for the special provisions is provided in the attached Fact Sheet.

R. Provisions and Requirements Implementing State Law. Provisions IV.C, V.B, and VI.C.8. of this Order only implement State law. These provisions and requirements are not required or authorized under the federal CWA; consequently, violations of these provisions and requirements are not subject to the enforcement remedies that are strictly available for NPDES violations.

1. The provisions in subsection IV.C. are Reclamation Specifications and the provisions in subsection VI.C.8. are the Master Reclamation Permit provisions of this Order. The Master Reclamation Permit provisions of this Order are adopted pursuant to Section 13523.1, Chapter 7, Article 2 of the CWC, which authorizes issuance of a Master Reclamation Permit to suppliers or distributors, or both, of recycled water in lieu of issuing individual water reclamation requirements to each Recycled Water User (hereafter User(s)).

   CWC Section 13523.1(b) requires a Master Reclamation Permit to include waste discharge requirements that require the supplier to:

   i. Comply with the uniform statewide reclamation criteria established pursuant to CWC Section 13521.
   ii. Establish and enforce rules or regulations for recycled water Users, governing the design and construction of recycled water use facilities and the use of recycled water.
   iii. Submit a quarterly report summarizing recycled water use.
   iv. Conduct periodic inspections of the facilities of the recycled water Users to monitor compliance by the Users.

2. This Order and its Master Reclamation Permit provisions implement CWC Section 13523.1(b).

3. In accordance with the Memorandum Of Agreement between the California Department of Public Health (DPH)(formerly referred to as the California Department of Health Services until July 1, 2007) and the State Water Board on use of recycled water, this Order incorporates any conditions of approval submitted as part of the DPH recommendations into water reclamation requirements proposed for adoption by the Regional Water Board.

S. Notification of Interested Parties. The Discharger and interested agencies and persons were notified of intent to prescribe Waste Discharge Requirements for the discharge and provided with an opportunity to submit their written comments and recommendations. Details of notification are provided in the Fact Sheet of this Order.

T. Consideration of Public Comment. In a public meeting, all comments pertaining to the discharge were heard and considered. Details of the Public Hearing are provided in the Fact Sheet of this Order.

III. DISCHARGE PROHIBITIONS

A. Discharge of pollutants or wastewater at a location or in a manner or of a character substantially different from that described in the Findings is prohibited.

B. The by-pass or overflow of wastes from the ST/WRF is prohibited, except as allowed by Standard Provisions I.G. and I.H. (Attachment D).

C. Creation of a condition of pollution or nuisance, as defined in Section 13050 of the CWC, is prohibited.

D. Discharge of waste classified as “hazardous,” as defined in Section 2521(a) of Title 23, California Code of Regulations (CCR), Section 2510, et seq., or “designated,” as defined in Section 13173 of the CWC, is prohibited.

E. Discharge of oil or any residuary product of petroleum, or of chemicals known to cause cancer or reproductive toxicity, is prohibited except as specifically authorized herein.

IV. EFFLUENT LIMITATIONS AND DISCHARGE SPECIFICATIONS

A. Effluent Limitations – Discharge Points 001 and 002

1. Final Effluent Limitations - Discharge Points 001 and 002

The Discharger shall maintain compliance with the following effluent limitations at Discharge Points 001 and 002:

a. The effluent limitations specified in Table 6:

Table 6. Effluent Limitations – Discharge Points 001 and 002

Parameter	Units	Effluent Limitations			Compliance Monitoring Location[3]
		Average Monthly	Average Weekly	Maximum Daily	
Biochemical Oxygen Demand (BOD_5) @ 20°C	mg/L	10	15	20	EFF-A
	lbs/day	234[1] 467[2]	350[1] 701[2]	467[1] 935[2]	
Total Suspended Solids (TSS)	mg/L	10	15	20	EFF-A
	lbs/day	234[1] 467[2]	350[1] 701[2]	467[1] 935[2]	
Settleable Solids	mL/L	0.1	--	0.2	EFF-A
Ammonia, Total (as N)	mg/L	1.0	--	--	EFF-A
Nitrogen, Total (as N)	mg/L	10	--	--	EFF-A

1. Based on a design flow of 2.8 MGD for Phase I
2. Based on a design flow of 5.6 MGD for Phase II.
3. Refer to Monitoring and Reporting Program (Attachment E) for monitoring location descriptions.

b. **Percent Removal:** The average monthly percent removal of BOD_5 @ 20°C and total suspended solids shall not be less than 90 percent. Compliance shall be determined at INF-001, EFF-A.

c. **pH.** The discharge shall not have a pH less than 6.5 standard units or greater than 8.3 standard units at any time. Compliance shall be determined at EFF-A.

d. **Acute Whole Effluent Toxicity.** Survival of aquatic organisms in 96-hour bioassays of undiluted waste shall be no less than:

   i. 70% for any one bioassay; and
   ii. 90% for the median of any three consecutive bioassays.

   Compliance shall be determined at EFF-A.

e. **Total Residual Chlorine.** Effluent total residual chlorine shall not exceed:

   i. 0.01 mg/L, as a 4-day average;

ii. 0.02 mg/L, as a 1-hour average;

Compliance shall be determined at EFF-A.

f. **Turbidity.** Effluent turbidity shall not exceed:

i. 0.5 NTU at any time; and
ii. 0.2 NTU more than 5% of the time within a 24-hour period.

Compliance shall be determined at INT-001.

g. **Total Coliform Organisms.** Effluent total coliform organisms shall not exceed:

i. 2.2 most probable number (MPN) per 100 mL as a 7-day median;
ii. 23 MPN/100 mL more than once in any calendar month; and
iii. 240 MPN/100 mL at any time.

Compliance shall be determined at EFF-A.

h. **Salinity.** The average annual electrical conductivity (EC) (@ 25°C) of the effluent shall not exceed the flow-weighted average annual EC (@ 25°C) of the source water plus 500 umhos/cm, or a maximum of 1,000 umhos/cm, whichever is more stringent. When source water is from more than one source, the EC shall be a flow-weighted average of all sources. Compliance shall be evaluated based on water supply monitoring and effluent monitoring at EFF-A (see Monitoring and Reporting Program, Attachment E).

2. Interim Effluent Limitations – NOT APPLICABLE

B. Land Discharge Specifications – NOT APPLICABLE

C. Reclamation Specifications – Discharge Point REC-001

1. No waste constituent shall be released or discharged, or placed where it will be released or discharged, in a concentration or in a mass that causes violation of the Groundwater Limitations.

2. Recycled water shall be managed in conformance with the regulations contained in Title 22, Division 4, Chapter 3, CCR.

3. All reclamation equipment, pumps, piping, valves, and outlets shall be appropriately marked to differentiate them from potable facilities. All reclamation distribution system piping shall be purple or adequately wrapped with purple tape.

4. Recycled water controller, valves, and similar appurtenances shall be affixed with recycled water warning signs, and shall be equipped with removable handles, locking mechanisms, or some other means to prevent public access or tampering.

The contents of the signs shall conform to Title 22, CCR, Section 60310. Quick couplers and sprinkler heads, if used, shall be of a type, or secured in a manner, that permits operation only by authorized personnel. Hose bibs that the public could use shall be eliminated.

5. Public contact with recycled water shall be controlled using signs and/or other appropriate means. All areas where recycled water is used that are accessible to the public shall be posted with signs that are visible to the public, in a size no less than 4 inches high by 8 inches wide, that include the following wording: "RECYCLED WATER – DO NOT DRINK, AGUA DE DESPERDICIO RECLAMADA – NO TOME" Each sign shall display an international symbol similar to that shown in Attachment G.

6. Recycled water shall not be allowed to escape from the authorized use areas by airborne spray or by surface flow except in minor amounts such as that associated with good irrigation practices.

7. Spray, mist or runoff shall not enter dwellings, designated outdoor eating areas, or food handling facilities.

8. Drinking water fountains shall be protected against contact with recycled water spray, mist, or runoff.

9. Workers shall be educated regarding proper hygienic procedures to ensure personal and public safety.

10. Potable water mains shall be separated by a clear horizontal distance of at least four feet from, and a clear vertical distance of at least one foot above, any parallel pipeline conveying disinfected tertiary recycled water, and shall be separated by a clear vertical distance of at least one foot above any crossing pipeline conveying disinfected tertiary recycled water, except as may be otherwise allowed or approved under DPH regulatory requirements or DPH design guidance documents. All separation distances shall be measured from the nearest outside edge of each pipe. Vertical separation distances shall apply wherever the horizontal separation distance is eleven feet or less.

11. Potable water supply piping and recycled water piping shall not have any cross-connections. Supplementing recycled water with potable water shall not be allowed except through an air-gap separation or, if approved by the DPH, a reduced pressure principle backflow device.

12. Application of recycled water to recycled water use areas shall not exceed the nitrogen or hydraulic loading reasonably necessary to satisfy the nitrogen or water uptake needs of the use area considering the plant, soil, climate, and irrigation management system (i.e., generally accepted agronomic rates).

13. Areas irrigated with recycled water shall be managed to prevent breeding of mosquitoes. More specifically:

a. All applied irrigation water must infiltrate completely within 24 hours.
b. Ditches receiving irrigation runoff not serving as wildlife habitat should be maintained free of emergent, marginal, and floating vegetation.
c. Low-pressure and un-pressurized pipelines and ditches, which are accessible to mosquitoes, shall not be used to store recycled water.

14. Excessive irrigation with recycled water that results in excessive runoff of recycled water, or continued irrigation of recycled water during periods of rain is prohibited. Overspray or runoff associated with normal sprinkler use shall be minimized.

15. No irrigation with recycled water shall take place within 50 feet of any domestic water supply well.

16. No impoundment of recycled water shall occur within 100 feet of any domestic water supply well.

17. Recycled water shall be distributed uniformly on adequate acreage in compliance with Reclamation Specifications. All tailwater shall be returned to the use areas or treatment facilities.

18. No spray irrigation with recycled water shall occur when wind velocities exceed 30 mph.

19. The Discharger shall maintain compliance with the following limitations at REC-001:

a. The recycled water limitations specified in Table 7:

Table 7. Recycled Water Limitations

Parameter	Units	Recycled Water Limitations			Compliance Monitoring Location[1]
		Average Monthly	Average Weekly	Maximum Daily	
Biochemical Oxygen Demand (BOD_5) @ 20°C	mg/L	10	15	20	EFF-A
Total Suspended Solids (TSS)	mg/L	10	15	20	EFF-A
Settleable Solids	mL/L	0.1	--	0.2	EFF-A
Nitrogen, Total (as N)	mg/L	10	--	--	EFF-A

[1] Refer to Monitoring and Reporting Program (Attachment E) for monitoring location descriptions.

b. **Percent Removal:** The average monthly percent removal of BOD_5 @ 20°C and total suspended solids shall not be less than 90 percent. Compliance shall be determined at INF-001 and EFF-A.

c. **pH.** The discharge shall not have a pH less than 6.5 standard units or greater than 8.3 standard units at any time. Compliance shall be determined at EFF-A.

d. **Turbidity.** Recycled water turbidity shall not exceed:

   i. 0.5 NTU at any time; and

   ii. 0.2 NTU, more than 5% of the time within a 24-hour period.

   Compliance shall be monitored at INT-001.

e. **Total Coliform Organisms.** Effluent total coliform organisms shall not exceed:

   i. 2.2 most probable number (MPN) per 100 mL as a 7 day median;

   ii. 23 MPN/100 mL more than once in any calendar month; and

   iii. 240 MPN/100 mL at any time.

   Compliance shall be determined at EFF-A.

f. **Salinity.** The average annual electrical conductivity (EC) (@ 25°C) of the effluent shall not exceed the flow-weighted average annual EC (@ 25°C) of the source water plus 500 umhos/cm, or a maximum of 1,000 umhos/cm, whichever is more stringent. When source water is from more than one source, the EC shall be a flow-weighted average of all sources. Compliance shall be evaluated based on water supply monitoring and effluent monitoring at EFF-A (see Monitoring and Reporting Program, Attachment E).

D. Flow Specifications

1. **Phase I Flow.** Effective upon compliance with Special Provision VI.C.2.c., the effluent discharged to the steel storage tanks and monitored at EFF-A shall not exceed:

   a. An average monthly daily flow of 3.1 MGD; and

   b. An average annual daily flow of 2.8 MGD.

2. **Phase II Flow.** Effective upon compliance with Special Provision VI.C.2.d., the effluent discharged to the steel storage tanks and monitored at EFF-A shall not exceed:

   a. An average monthly daily flow of 6.2 MGD; and

   b. An average annual daily flow of 5.6 MGD.

V. RECEIVING WATER LIMITATIONS

A. Surface Water Limitations

1. Receiving water limitations for Fancher Creek and the Diversion Channel are based on water quality objectives contained in the Tulare Lake Basin Plan and are a required part of this Order. The discharge shall not cause the following in Fancher Creek and/or the Diversion Channel:

a. **Un-ionized Ammonia**. Un-ionized ammonia to be present in amounts that adversely affect beneficial uses nor to be present in excess of 0.025 mg/L (as N).

b. **Bacteria**. The fecal coliform concentration, based on a minimum of not less than five samples for any 30-day period, to exceed a geometric mean of 200 MPN/100 mL, nor more than ten percent of the total number of fecal coliform samples taken during any 30-day period to exceed 400 MPN/100 mL.

c. **Biostimulatory Substances**. Water to contain biostimulatory substances which promote aquatic growths in concentrations that cause nuisance or adversely affect beneficial uses.

d. **Chemical Constituents**. Chemical constituents to be present in concentrations that adversely affect beneficial uses.

e. **Color**. Discoloration that causes nuisance or adversely affects beneficial uses.

f. **Dissolved Oxygen**:

   i. The monthly median of the mean daily dissolved oxygen concentration to fall below 85 percent of saturation in the main water mass at centroid of flow;

   ii. The 95 percentile dissolved oxygen concentration to fall below 75 percent of saturation; nor

   iii. The dissolved oxygen concentration to be reduced below 5.0 mg/L at any time. Where ambient DO is less than these objectives, discharges shall not cause a further decrease in DO concentrations.

   The monthly median of the mean daily dissolved oxygen concentration and the 95-percentile concentration shall be determined as follows: (1) calculate the percent of saturation for each monitoring event during the month (based on the temperature for each monitoring event), (2) calculate the median of all the percent of saturation values computed during the month, and (3) calculate the 95th percentile of all the percent of saturation values computed during the month

g. **Floating Material**. Floating material to be present in amounts that cause nuisance or adversely affect beneficial uses.

h. **Oil and Grease**. Oils, greases, waxes, or other materials to be present in concentrations that cause nuisance, result in a visible film or coating on the surface of the water or on objects in the water, or otherwise adversely affect beneficial uses.

i. **pH**. The pH to be depressed below 6.5 nor raised above 8.3.

j. **Pesticides**:

   i. Pesticides to be present, individually or in combination, in concentrations that adversely affect beneficial uses;

ii. Pesticides to be present in bottom sediments or aquatic life in concentrations that adversely affect beneficial uses.

k. **Radioactivity**. Radionuclides to be present in concentrations that are deleterious to human, plant, animal, or aquatic life nor that result in the accumulation of radionuclides in the food web to an extent that presents a hazard to human, plant, animal, or aquatic life.

l. **Suspended Sediments**. The suspended sediment load and suspended sediment discharge rate of surface waters to be altered in such a manner as to cause nuisance or adversely affect beneficial uses.

m. **Settleable Substances**. Substances to be present in concentrations that result in the deposition of material that causes nuisance or adversely affects beneficial uses

n. **Suspended Material**. Suspended material to be present in concentrations that cause nuisance or adversely affect beneficial uses.

o. **Taste and Odors**. Taste- or odor-producing substances to be present in concentrations that impart undesirable tastes or odors to fish flesh or other edible products of aquatic origin, or that cause nuisance, or otherwise adversely affect beneficial uses.

p. **Temperature**. The natural temperature to be increased by more than 5°F.

q. **Toxicity**. Toxic substances to be present, individually or in combination, in concentrations that produce detrimental physiological responses in human, plant, animal, or aquatic life.

r. **Turbidity**. The turbidity to increase as follows:

i. More than 1 Nephelometric Turbidity Unit (NTU) where natural turbidity is between 0 and 5 NTUs.

ii. More than 20 percent where natural turbidity is between 5 and 50 NTUs.

iii. More than 10 NTU where natural turbidity is between 50 and 100 NTUs.

iv. More than 10 percent where natural turbidity is greater than 100 NTUs.

2. Receiving water limitations for Little Dry Creek are based on water quality objectives contained in the Sacramento-San Joaquin Rivers Basin Plan for the discharge to Little Dry Creek, which is tributary to the San Joaquin River, and are a required part of this Order. The discharge shall not cause the following in Little Dry Creek:

a. **Bacteria**. The fecal coliform concentration, based on a minimum of not less than five samples for any 30-day period, to exceed a geometric mean of 200 MPN/100 mL, nor more than ten percent of the total number of fecal coliform samples taken during any 30-day period to exceed 400 MPN/100 mL.

b. **Biostimulatory Substances**. Water to contain biostimulatory substances which promote aquatic growths in concentrations that cause nuisance or adversely affect beneficial uses.

c. **Chemical Constituents**. Chemical constituents to be present in concentrations that adversely affect beneficial uses.

d. **Color**. Discoloration that causes nuisance or adversely affects beneficial uses.

e. **Dissolved Oxygen**:

   i. The monthly median of the mean daily dissolved oxygen concentration to fall below 85 percent of saturation in the main water mass;

   ii. The 95 percentile dissolved oxygen concentration to fall below 75 percent of saturation ; nor

   iii. The dissolved oxygen concentration to be reduced below 7.0 mg/L at any time.

   The monthly median of the mean daily dissolved oxygen concentration and the 95-percentile concentration shall be determined as follows: (1) calculate the percent of saturation for each monitoring event during the month (based on the temperature for each monitoring event), (2) calculate the median of all the percent of saturation values computed during the month, and (3) calculate the 95th percentile of all the percent of saturation values computed during the month

f. **Floating Material**. Floating material to be present in amounts that cause nuisance or adversely affect beneficial uses.

g. **Oil and Grease**. Oils, greases, waxes, or other materials to be present in concentrations that cause nuisance, result in a visible film or coating on the surface of the water or on objects in the water, or otherwise adversely affect beneficial uses.

h. **pH**. The pH to be depressed below 6.5 nor raised above 8.5.

i. **Pesticides**:

   i. Pesticides to be present, individually or in combination, in concentrations that adversely affect beneficial uses;

   ii. Pesticides to be present in bottom sediments or aquatic life in concentrations that adversely affect beneficial uses;

   iii. Total identifiable persistent chlorinated hydrocarbon pesticides to be present in the water column at concentrations detectable within the accuracy of analytical methods approved by USEPA or the Executive Officer**;**

iv. Pesticide concentrations to exceed those allowable by applicable antidegradation policies (see State Water Board Resolution No. 68-16 and 40 CFR §131.12.);

v. Pesticide concentrations to exceed the lowest levels technically and economically achievable;

vi. Pesticides to be present in concentration in excess of the maximum contaminant levels set forth in California Code of Regulations, Title 22, Division 4, Chapter 15; and

vii. Thiobencarb to be present in excess of 1.0 mg/L.

j. **Radioactivity**:

i. Radionuclides to be present in concentrations that are harmful to human, plant, animal, or aquatic life nor that result in the accumulation of radionuclides in the food web to an extent that presents a hazard to human, plant, animal, or aquatic life.

ii. Radionuclides to be present in excess of the maximum contaminant levels specified in Table 4 (MCL Radioactivity) of Section 64443 of Title 22 of the California Code of Regulations.

k. **Suspended Sediments**. The suspended sediment load and suspended sediment discharge rate of surface waters to be altered in such a manner as to cause nuisance or adversely affect beneficial uses.

l. **Settleable Substances**. Substances to be present in concentrations that result in the deposition of material that causes nuisance or adversely affects beneficial uses

m. **Suspended Material**. Suspended material to be present in concentrations that cause nuisance or adversely affect beneficial uses.

n. **Taste and Odors**. Taste- or odor-producing substances to be present in concentrations that impart undesirable tastes or odors to domestic or municipal water supplies or to fish flesh or other edible products of aquatic origin, or that cause nuisance, or otherwise adversely affect beneficial uses.

o. **Temperature**. The natural temperature to be increased by more than 5°F.

p. **Toxicity**. Toxic substances to be present, individually or in combination, in concentrations that produce detrimental physiological responses in human, plant, animal, or aquatic life.

q. **Turbidity**. The turbidity to increase as follows:

i. More than 1 Nephelometric Turbidity Unit (NTU) where natural turbidity is between 0 and 5 NTUs.

ii. More than 20 percent where natural turbidity is between 5 and 50 NTUs.

iii. More than 10 NTU where natural turbidity is between 50 and 100 NTUs.

iv. More than 10 percent where natural turbidity is greater than 100 NTUs.

B. Groundwater Limitations

1. The primary means of reasonably controlling and minimizing degradation of groundwater and ensuring no impact on beneficial uses and no exceedance of a water quality objective by the discharge are the effluent limitations and management controls specified herein. All degradation resulting from this quality effluent has been determined reasonable provided, as evaluation of the project indicates, the discharge does not cause groundwater to exceed a water quality objective. Therefore, the discharge shall not cause underlying groundwater to contain, or contribute to groundwater containing:

   a. Total coliform organism densities equal to or greater than 2.2 MPN/100 mL;

   b. Constituents in concentrations greater than the appropriate MCLs specified in Title 22; or

   c. Taste or odor-producing constituents, or toxic substances, or any other constituents in concentrations that create a nuisance or adversely affect a beneficial use.

VI. PROVISIONS

A. Standard Provisions

1. All Standard Provisions included in Attachment D are part of this Order.

2. The following provisions are part of this Order:

   a. If the Discharger's wastewater treatment plant is publicly owned or subject to regulation by California Public Utilities Commission, it shall be supervised and operated by persons possessing certificates of appropriate grade according to Title 23, CCR, Division 3, Chapter 26.

   b. After notice and opportunity for a hearing, this Order may be terminated or modified for cause, including, but not limited to:

      i. violation of any term or condition contained in this Order;

      ii. obtaining this Order by misrepresentation or by failing to disclose fully all relevant facts;

      iii. a change in any condition that requires either a temporary or permanent reduction or elimination of the authorized discharge; and

      iv. a material change in the character, location, or volume of discharge.

The causes for modification include:

- *New regulations.* New regulations have been promulgated under Section 405(d) of the Clean Water Act, or the standards or regulations on which the permit was based have been changed by promulgation of amended standards or regulations or by judicial decision after the permit was issued.

- *Land application plans.* When required by a permit condition to incorporate a land application plan for beneficial reuse of sewage sludge, to revise an existing land application plan, or to add a land application plan.

- *Change in sludge use or disposal practice.* Under 40 CFR 122.62(a)(1), a change in the Discharger's sludge use or disposal practice is a cause for modification of the permit. It is cause for revocation and reissuance if the Discharger requests or agrees.

The Regional Water Board may review and revise this Order at any time upon application of any affected person or the Regional Water Board's own motion.

c. If a toxic effluent standard or prohibition (including any scheduled compliance specified in such effluent standard or prohibition) is established under Section 307(a) of the CWA, or amendments thereto, for a toxic pollutant that is present in the discharge authorized herein, and such standard or prohibition is more stringent than any limitation upon such pollutant in this Order, the Regional Water Board will revise or modify this Order in accordance with such toxic effluent standard or prohibition.

   The Discharger shall comply with effluent standards and prohibitions within the time provided in the regulations that establish those standards or prohibitions, even if this Order has not yet been modified.

d. This Order shall be modified, or alternately revoked and reissued, to comply with any applicable effluent standard or limitation issued or approved under Sections 301(b)(2)(C) and (D), 304(b)(2), and 307(a)(2) of the CWA, if the effluent standard or limitation so issued or approved:

   i. contains different conditions or is otherwise more stringent than any effluent limitation in the Order; or

   ii. controls any pollutant limited in the Order.

   The Order, as modified or reissued under this paragraph, shall also contain any other requirements of the CWA then applicable.

e. The provisions of this Order are severable. If any provision of this Order is found invalid, the remainder of this Order shall not be affected.

f. The Discharger shall take all reasonable steps to minimize any adverse effects to waters of the State or users of those waters resulting from any discharge or sludge/biosolids use or disposal in violation of this Order. Reasonable steps shall include such accelerated or additional monitoring as necessary to determine the nature and impact of the non-complying discharge or sludge/biosolids use or disposal.

g. The Discharger shall ensure compliance with any existing or future pretreatment standard promulgated by USEPA under Section 307 of the CWA, or amendment thereto, for any discharge to the municipal system.

h. The discharge of any radiological, chemical or biological warfare agent or high-level, radiological waste is prohibited.

i. A copy of this Order shall be maintained at the discharge facility and be available at all times to operating personnel. Key operating personnel shall be familiar with its content.

j. Safeguard to electric power failure:

    i. The Discharger shall provide safeguards to assure that, should there be reduction, loss, or failure of electric power, the discharge shall comply with the terms and conditions of this Order.

    ii. Upon written request by the Regional Water Board, the Discharger shall submit a written description of safeguards. Such safeguards may include alternate power sources, standby generators, retention capacity, operating procedures, or other means. A description of the safeguards provided shall include an analysis of the frequency, duration, and impact of power failures experienced over the past five years on effluent quality and on the capability of the Discharger to comply with the terms and conditions of the Order. The adequacy of the safeguards is subject to the approval of the Regional Water Board.

    iii. Should the treatment works not include safeguards against reduction, loss, or failure of electric power, or should the Regional Water Board not approve the existing safeguards, the Discharger shall, within ninety days of having been advised in writing by the Regional Water Board that the existing safeguards are inadequate, provide to the Regional Water Board and USEPA a schedule of compliance for providing safeguards such that in the event of reduction, loss, or failure of electric power, the Discharger shall comply with the terms and conditions of this Order. The schedule of compliance shall, upon approval of the Regional Water Board, become a condition of this Order.

k. The Discharger, upon written request of the Regional Water Board, shall file with the Board a technical report on its preventive (failsafe) and contingency (cleanup) plans for controlling accidental discharges, and for minimizing the effect of such events. This report may be combined with that required under Regional Water Board Standard Provision VI.A.2.m.

The technical report shall:

i. Identify the possible sources of spills, leaks, untreated waste by-pass, and contaminated drainage. Loading and storage areas, power outage, waste treatment unit outage, and failure of process equipment, tanks and pipes should be considered.

ii. Evaluate the effectiveness of present facilities and procedures and state when they became operational.

iii. Predict the effectiveness of the proposed facilities and procedures and provide an implementation schedule containing interim and final dates when they will be constructed, implemented, or operational.

The Regional Water Board, after review of the technical report, may establish conditions which it deems necessary to control accidental discharges and to minimize the effects of such events. Such conditions shall be incorporated as part of this Order, upon notice to the Discharger.

l. A publicly owned treatment works (POTWs) whose waste flow has been increasing, or is projected to increase, shall estimate when flows will reach hydraulic and treatment capacities of its treatment and disposal facilities. The projections shall be made in January, based on the last three years' average dry weather flows, peak wet weather flows and total annual flows, as appropriate. When any projection shows that capacity of any part of the facilities may be exceeded in four years, the Discharger shall notify the Regional Water Board by 31 January. A copy of the notification shall be sent to appropriate local elected officials, local permitting agencies and the press. Within 120 days of the notification, the Discharger shall submit a technical report showing how it will prevent flow volumes from exceeding capacity or how it will increase capacity to handle the larger flows. The Regional Water Board may extend the time for submitting the report.

m. The Discharger shall submit technical reports as directed by the Executive Officer. All technical reports required herein that involve planning, investigation, evaluation, or design, or other work requiring interpretation and proper application of engineering or geologic sciences, shall be prepared by or under the direction of persons registered to practice in California pursuant to California Business and Professions Code, sections 6735, 7835, and 7835.1. To demonstrate compliance with Title 16, CCR, sections 415 and 3065, all technical reports must contain a statement of the qualifications of the responsible registered professional(s). As required by these laws, completed technical reports must bear the signature(s) and seal(s) of the registered professional(s) in a manner such that all work can be clearly attributed to the professional responsible for the work.

n. The Discharger shall conduct analysis on any sample provided by USEPA as part of the Discharge Monitoring Quality Assurance (DMQA) program. The results of any such analysis shall be submitted to USEPA's DMQA manager.

o. For POTWs, prior to making any change in the point of discharge, place of use, or purpose of use of treated wastewater that results in a decrease of flow in any portion of a watercourse, the Discharger must file a petition with the State Water Board, Division of Water Rights, and receive approval for such a change. (CWC section 1211).

p. In the event the Discharger does not comply or will be unable to comply for any reason, with any prohibition, maximum daily effluent limitation, 1-hour average effluent limitation, or receiving water limitation contained in this Order, the Discharger shall notify the Regional Water Board by telephone (559) 445-5116 within 24 hours of having knowledge of such noncompliance, and shall confirm this notification in writing within five days, unless the Regional Water Board waives confirmation. The written notification shall include the information required by Attachment D, Section V.E.1 [40 CFR section 122.41(l)(6)(i)].

B. Monitoring and Reporting Program (MRP) Requirements

1. The Discharger shall comply with the MRP and any revisions thereto (Attachment E).

C. Special Provisions

1. Reopener Provisions

a. This Order may be reopened for modification, or revocation and reissuance, as a result of the detection of a reportable priority pollutant generated by special conditions included in this Order. These special conditions may be, but are not limited to, fish tissue sampling, whole effluent toxicity, monitoring requirements on internal waste stream(s), and monitoring for surrogate parameters. Additional requirements may be included in this Order as a result of the special condition monitoring data.

b. Conditions that necessitate a major modification of a permit are described in 40 CFR section 122.62, including:

   i. If new or amended applicable water quality standards are promulgated or approved pursuant to Section 303 of the CWA, or amendments thereto, this permit may be reopened and modified in accordance with the new or amended standards.

   ii. When new information, that was not available at the time of permit issuance, would have justified different permit conditions at the time of issuance.

c. If new or amended applicable water quality standards are promulgated or approved pursuant to Section 303 of the CWA, or amendments thereto, this

Order may be reopened and modified in accordance with the new or amended standards.

d. **Mercury.** If mercury is found to be causing toxicity based on acute or chronic toxicity test results, or if a TMDL program that applies to this discharge is adopted, this Order may be reopened and an effluent concentration limitation imposed. If the Regional Water Board determines that a mercury offset program is feasible for Dischargers subject to a NPDES permit, then this Order may be reopened to evaluate the need for a mercury offset program for the Discharger.

e. **Salinity Evaluation and Minimization Plan**. This Order requires that the Discharger prepare and implement a salinity evaluation and minimization plan to address sources of salinity entering the ST/WRF. The plan shall be completed and submitted to the Regional Water Board within nine (9) months of operation of the ST/WRF for approval by the Executive Officer. Based on a review of the results of implementation of the salinity evaluation and minimization plan this Order may be reopened for addition and/or modification of effluent limitations and requirements for salinity.

f. **Whole Effluent Toxicity.** As a result of a Toxicity Reduction Evaluation (TRE), this Order may be reopened to include a chronic toxicity limitation, a new acute toxicity limitation, and/or a limitation for a specific toxicant identified in the TRE. Additionally, if the State Water Board revises the SIP's toxicity control provisions that would require the establishment of numeric chronic toxicity effluent limitations, this Order may be reopened to include a numeric chronic toxicity effluent limitation based on the new provisions.

g. If after review of monitoring results it is determined that the discharge has reasonable potential to cause or contribute to an exceedance of a water quality objective, this Order may be reopened and effluent and/or groundwater limitations added for the subject constituents.

h. **Water Effects Ratios (WER) and Metal Translators.** A default WER of 1.0 has been used in this Order for calculating CTR criteria for applicable priority pollutant inorganic constituents. If the Discharger performs studies to determine site-specific WERs and/or site-specific dissolved-to-total metal translators, this Order may be reopened to modify the subsequently adopted effluent limitations for the applicable inorganic constituents.

i. **Disinfection Byproducts Study.** This Order requires the Discharger to complete and submit a report on the results of the Disinfection Byproducts Study to determine the levels of disinfection byproducts that may remain in effluent due to the small amounts of chlorine that may be used to clean the membranes. Based on a review of the results of the report on the Disinfection Byproducts Study, this Order may be reopened for addition of effluent limitations and requirements for disinfection byproducts.

2. Special Studies, Technical Reports and Additional Monitoring Requirements

a. **Chronic Whole Effluent Toxicity.** For compliance with the Basin Plans' narrative toxicity objectives, this Order requires the Discharger to conduct chronic whole effluent toxicity testing, as specified in the Monitoring and Reporting Program (Attachment E, Section V.). Furthermore, this Provision requires the Discharger to investigate the causes of, and identify corrective actions to reduce or eliminate effluent toxicity. If the discharge exceeds the toxicity numeric monitoring trigger established in this Provision, the Discharger is required to initiate a Toxicity Reduction Evaluation (TRE), in accordance with an approved TRE Work Plan, and take actions to mitigate the impact of the discharge and prevent reoccurrence of toxicity. A TRE is a site-specific study conducted in a stepwise process to identify the source(s) of toxicity and the effective control measures for effluent toxicity. TREs are designed to identify the causative agents and sources of whole effluent toxicity, evaluate the effectiveness of the toxicity control options, and confirm the reduction in effluent toxicity. This Provision includes requirements for the Discharger to develop and submit a TRE Work Plan and includes procedures for accelerated chronic toxicity monitoring and TRE initiation.

i. **Initial Investigative Toxicity Reduction Evaluation (TRE) Work Plan. By <90 days from the effective date of this Order>,** the Discharger shall submit to the Regional Water Board an Initial Investigative TRE Work Plan for approval by the Executive Officer. This should be a one to two page document including, at minimum:

a) A description of the investigation and evaluation techniques that will be used to identify potential causes and sources of effluent toxicity, effluent variability, and treatment system efficiency;

b) A description of the facility's methods of maximizing in-house treatment efficiency and good housekeeping practices, and a list of all chemicals used in operation of the facility; and

c) A discussion of who will conduct the Toxicity Identification Evaluation, if necessary (i.e. an in-house expert or outside contractor).

ii. **Accelerated Monitoring and TRE Initiation.** When the numeric toxicity monitoring trigger is exceeded during regular chronic toxicity monitoring, and the testing meets all test acceptability criteria, the Discharger shall initiate accelerated monitoring as required in the Accelerated Monitoring Specifications. WET testing results exceeding the monitoring trigger during accelerated monitoring demonstrates a pattern of toxicity and requires the Discharger to initiate a TRE to address the effluent toxicity.

iii. **Numeric Monitoring Trigger.** The numeric toxicity monitoring trigger is > **1 TUc** (where TUc = 100/NOEC). The monitoring trigger is not an effluent limitation; it is the toxicity threshold at which the Discharger is required to begin accelerated monitoring and initiate a TRE.

iv. **Accelerated Monitoring Specifications.** If the monitoring trigger is exceeded during regular chronic toxicity testing, within 14-days of notification by the laboratory of the test results, the Discharger shall initiate accelerated monitoring. Accelerated monitoring shall consist of four (4) chronic toxicity tests in a six-week period (i.e., one test every two weeks) using the species that exhibited toxicity. The following protocol shall be used for accelerated monitoring and TRE initiation:

a) If the results of four (4) consecutive accelerated monitoring tests do not exceed the monitoring trigger, the Discharger may cease accelerated monitoring and resume regular chronic toxicity monitoring. However, notwithstanding the accelerated monitoring results, if there is adequate evidence of a pattern of effluent toxicity, the Executive Officer may require that the Discharger initiate a TRE.

b) If the source(s) of the toxicity is easily identified (i.e. temporary plant upset), the Discharger shall make necessary corrections to the Facility and shall continue accelerated monitoring until four (4) consecutive accelerated tests do not exceed the monitoring trigger. Upon confirmation that the effluent toxicity has been removed, the Discharger may cease accelerated monitoring and resume regular chronic toxicity monitoring.

c) If the result of any accelerated toxicity test exceeds the monitoring trigger, the Discharger shall cease accelerated monitoring and initiate a TRE to investigate the cause(s) of, and identify corrective actions to reduce or eliminate effluent toxicity. Within thirty (30) days of notification by the laboratory of the test results exceeding the monitoring trigger during accelerated monitoring, the Discharger shall submit a TRE Action Plan to the Regional Water Board including, at minimum:

1) Specific actions the Discharger will take to investigate and identify the cause(s) of toxicity, including TRE WET monitoring schedule;

2) Specific actions the Discharger will take to mitigate the impact of the discharge and prevent the recurrence of toxicity; and

3) A schedule for these actions.

Within sixty (60) days of notification by the laboratory of the test results, the Discharger shall submit to the Regional Water Board a TRE Work Plan for approval by the Executive Officer. The TRE Work Plan shall outline the procedures for identifying the source(s) of, and reducing or eliminating effluent toxicity. The TRE Work Plan must be developed in accordance with EPA guidance[1].

b. **Priority Pollutant Evaluation.** The Discharger shall submit between **<180 days and 365 days prior to the expiration of this Order>** a technical report that

[1] See Attachment F (Fact Sheet) Section VII.B.2.a. for a list of EPA guidance documents that must be considered in development of the TRE Workplan.

proposes effluent limits for all CTR constituents showing a reasonable potential to cause or contribute to an exceedance of a water quality objective in Little Dry Creek and/or the Diversion Channel and/or Fancher Creek. The reasonable potential analysis shall be consistent with the State Implementation Policy for all detected constituents. The technical report shall document the reasonable potential analysis and all supporting calculations. Provision VI.A.2.m requirements apply to the technical report.

c. **Post-Construction Report. At least 30 days prior to start-up**, the Discharger shall submit a post-construction report certifying that the ST/WRF was designed and constructed to operate in full compliance with the terms of this Order. The post construction report is subject to Provision VI.A.2.m. and shall clearly note any deviations from the ST/WRF design presented in the Report of Waste Discharge, or as approved by DPH pursuant to Title 22, CCR.

d. **Discharge Flow Expansion (Phase II Improvements).** Discharge flow of 5.6 MGD (average annual) to Fancher Creek and/or the Diversion Channel is subject to compliance with the following conditions:

   i. **Facility Improvements**. The Discharger shall have completed construction and start-up of Phase II on the ST/WRF, as identified in the Fact Sheet, Section II and shall provide evidence, certified by the ST/WRF design engineer, that the ST/WRF is operating properly.

   ii. **Effluent Limitation Compliance**. The Discharger shall demonstrate compliance with final effluent limitations.

   iii. **Implementation of the San Joaquin River Agreement**. The Discharger shall demonstrate that 2006 San Joaquin River Agreement (*NRCD v. Rodgers*); or some other subsequent agreement, has been implemented that increases the minimum 1Q10 and 7Q10 flows of the San Joaquin River to 100 cubic feet per second.

   iv. **Request for Increase**. The Discharger shall submit a request for an increase in discharge flow rate, which demonstrates compliance with items i., ii., and iii. above. The increase in discharge flow rate, as allowed under the terms of this Order, shall not be effective until the Executive Officer approves the Discharger's request in writing.

e. **Disinfection Byproducts Study.** The Discharger shall conduct a special study to determine if disinfection byproducts (DBPs) are present in the tertiary treated effluent due to the use of chlorine to clean the membranes. The Discharger shall comply with the following time schedule to complete this study:

Task	Compliance Date
1. Submit Monitoring Plan	**Within 60 days** after operation of the ST/WRF begins.
2. Commence implementation of Monitoring Plan	**30 days** following Executive Officer approval of the Monitoring Plan.
3. Submit Technical Report: Comprehensive Evaluation of Results	**Within 6 months** of study commencement.

3. Best Management Practices and Pollution Prevention

a. **Salinity Evaluation and Minimization Plan**. The Discharger shall prepare and implement a salinity evaluation and minimization plan to address sources of salinity from municipal wastewater treatment system. The plan shall be completed and submitted to the Regional Water Board **within 9 months of operation of the ST/WRF** for approval by the Executive Officer.

4. Construction, Operation and Maintenance Specifications

a. **ST/WRF.**

i. The ST/WRF shall be designed, constructed, operated, and maintained to prevent inundation or washout due to floods with a 100-year return frequency.

ii. Public contact with wastewater, sludge, biosolids, and other wastes shall be precluded through such means as fences and signs, or acceptable alternatives.

iii. Objectionable odors originating at the ST/WRF shall not be perceivable beyond the limits of the waste treatment areas at an intensity that creates or threatens to create nuisance conditions.

b. **Ultraviolet Disinfection (UV) System**

i. The Discharger shall provide continuous, reliable monitoring of flow, UV transmittance, UV intensity, UV dose, UV power, and turbidity.

ii. The Discharger shall operate the UV disinfection system to provide a minimum UV dose of 80 millijoules per square centimeter (mJ/cm^2) at all times, unless otherwise approved by DPH.

iii. The UV transmittance (at 254 nanometers) in the wastewater shall not fall below 65 percent of maximum at any time, unless otherwise approved by DPH.

iv. The quartz sleeves and cleaning system components shall be visually inspected per the manufacturer's operation manual for physical wear (scoring, solarization, seal leaks, etc.) and to check the efficacy of the cleaning system.

v. The quartz sleeves shall be cleaned at fixed intervals to ensure the minimum required UV dose delivery is consistently achieved. Cleaning intervals shall not be established based on the presence of coliform organisms.

vi. Lamps shall be replaced per the manufacturer's recommendation, or sooner, if there are indications the lamps are failing to provide adequate disinfection. Lamp age and lamp replacement records must be maintained.

vii. The Discharger shall comply with all of DPH's acceptance conditions for the UV disinfection system in use at the ST/WRF.

viii. **Prior to initial discharge to Discharge Points 001, 002, or REC-001**, the Discharger shall submit to the Executive Officer a copy of a letter from DPH stating that all the UV disinfection system pre-operation acceptance conditions specified by DPH have been satisfied.

ix. **Prior to initial discharge to Discharge Points 001, 002, or REC-001**, the Discharger shall submit to the Executive Officer and DPH an operations and maintenance plan (detailing how compliance with the National Water Research Institute's guidelines and DPH's UV disinfection system acceptance conditions will be assured at all times) for approval.

x. The UV disinfection system shall be operated in accordance with an approved operations and maintenance plan.

5. Special Provisions for Municipal Facilities (POTWs Only)

a. **Pretreatment Requirements.**

i. The Discharger shall continue to authorize the City of Fresno to implement its approved pretreatment program within the City of Clovis and the program shall be an enforceable condition of this Order. If the Discharger prevents or impedes City of Fresno implementation of pretreatment functions, the Regional Water Board, the State Water Board or the USEPA may take enforcement actions against the Discharger as authorized by the CWA.

ii. The Discharger shall continue to authorize the City of Fresno to enforce the Pretreatment Standards promulgated under sections 307(b), 307(c), and 307(d) of the CWA for the City of Clovis. This includes the pretreatment functions required by 40 CFR part 403 not limited to:

a) Adopting the legal authority required by 40 CFR 403.8(f)(1);

b) Enforcing the Pretreatment Standards of 40 CFR 403.5 and 403.6;

c) Implementing procedures to ensure compliance as required by 40 CFR 403.8(f)(2);

d) Providing funding and personnel for implementation and enforcement of the pretreatment program as required by 40 CFR 403.8(f)(3); and

e) Publishing a list of significant violators as required by 40 CFR 403.8(f)(2)(vii).

iii. The Discharger shall continue to authorize and enable the City of Fresno to implement, as more completely set forth in 40 CFR 403.5, the necessary legal authorities, programs, and controls to ensure that the following incompatible wastes are not introduced to the treatment system, where incompatible wastes are:

a) Wastes which create a fire or explosion hazard in the treatment works;

b) Wastes which will cause corrosive structural damage to treatment works, but in no case wastes with a pH lower than 5.0, unless the works is specially designed to accommodate such wastes;

c) Solid or viscous wastes in amounts which cause obstruction to flow in sewers, or which cause other interference with proper operation or treatment works;

d) Any waste, including oxygen demanding pollutants (BOD, *etc*.), released in such volume or strength as to cause inhibition or disruption in the treatment works, and subsequent treatment process upset and loss of treatment efficiency;

e) Heat in amounts that inhibit or disrupt biological activity in the treatment works, or that raise influent temperatures above 40°C (104°F), unless the Regional Water Board approves alternate temperature limits;

f) Petroleum oil, non-biodegradable cutting oil, or products of mineral oil origin in amounts that will cause interference or pass through;

g) Pollutants which result in the presence of toxic gases, vapors, or fumes within the treatment works in a quantity that may cause acute worker health and safety problems; and:

h) Any trucked or hauled pollutants, except at points predesignated by the Discharger.

iv. The Discharger shall continue to authorize and enable the City of Fresno to implement, as more completely set forth in 40 CFR 403.5, the legal authorities, programs, and controls necessary to ensure that indirect discharges do not introduce pollutants into the sewerage system that, either alone or in conjunction with a discharge or discharges from other sources:

a) Flow through the system to the receiving water in quantities or concentrations that cause a violation of this Order, or:

b) Inhibit or disrupt treatment processes, treatment system operations, or sludge processes, use, or disposal and either cause a violation of this Order or prevent sludge/biosolids use or disposal in accordance with this Order.

b. **Sludge/Biosolids Discharge Specifications**

i. Collected screenings, residual sludge, biosolids, and other solids removed from liquid wastes shall be disposed of in a manner approved by the Executive Officer, and consistent with *Consolidated Regulations for Treatment, Storage, Processing, or Disposal of Solid Waste,* as set forth in Title 27, CCR, Division 2, Subdivision 1, section 20005, et seq. Removal for further treatment, disposal, or reuse at sites (i.e., landfill, composting sites, soil amendment sites) that are operated in accordance with valid waste discharge requirements issued by a regional water quality control board will satisfy these specifications.

ii. Sludge and solid waste shall be removed from screens, sumps, ponds, clarifiers, etc. as needed to ensure proper plant performance.

iii. The treatment of sludge generated at the ST/WRF shall be confined to the ST/WRF property and conducted in a manner that precludes infiltration of waste constituents into soils in a mass or concentration that will violate Groundwater Limitations V.B. In addition, the storage of residual sludge, solid waste, and biosolids on ST/WRF property shall be temporary and controlled, and contained in a manner that minimizes leachate formation and precludes infiltration of waste constituents into soils in a mass or concentration that will violate Groundwater Limitations V.B.

iv. The use and disposal of biosolids shall comply with existing Federal and State laws and regulations, including permitting requirements and technical standards included in 40 CFR 503. If the State Water Board and the Regional Water Board are given the authority to implement regulations contained in 40 CFR 503, this Order may be reopened to incorporate appropriate time schedules and technical standards. The Discharger must comply with the standards and time schedules contained in 40 CFR 503 whether or not they have been incorporated into this Order.

c. **Biosolids Disposal Requirements.** Any proposed change in biosolids disposal practice from that described in Findings and subsequent changes shall be reported to the Executive Officer and USEPA Regional Administrator at least **90 days** in advance of the change.

d. **Collection System.** Requirements of this Order concerning operation and maintenance do not apply to the Discharger's collection system except for a 24-hour reporting requirement in the event of an overflow from the collection system that endangers human health or the environment. In such an event, the Discharger shall comply with the Twenty-four Hour Reporting provisions set forth in Attachment D, section V.D.

e. **Electronic Notification System.** This permit, and the Monitoring and Reporting Program which is a part of this permit, requires that certain parameters be monitored on a continuous basis. The wastewater treatment plant is not staffed on a full time basis. Permit violations or system upsets can go undetected during this period. The Discharger is required to establish an electronic system for operator notification for continuous recording device alarms. For systems installed following permit adoption, the notification system shall be installed simultaneously.

6. Other Special Provisions

a. The Discharger shall not allow pollutant-free wastewater to be discharged into the collection, treatment, and disposal system in amounts that significantly diminish the system's capability to comply with this Order. Pollutant-free wastewater means rainfall, groundwater, cooling waters, and condensates that are essentially free of pollutants.

b. Wastewater shall be oxidized, filtered, and adequately disinfected as specified in Title 22, CCR, Division 4, Chapter 3, or the equivalent.

c. In the event of any change in control or ownership of land or waste discharge facilities presently owned or controlled by the Discharger, the Discharger shall notify the succeeding owner or operator of the existence of this Order by letter, a copy of which shall be immediately forwarded to the Regional Water Board.

To assume operation under this Order, the succeeding owner or operator must apply in writing to the Executive Officer requesting transfer of the Order. The request must contain the requesting entity's full legal name, the State of incorporation if a corporation, address and telephone number of the persons responsible for contact with the Regional Water Board and a statement. The statement shall comply with the signatory and certification requirements in Standard Provisions (Attachment D, Section V.B.) and state that the new owner or operator assumes full responsibility for compliance with this Order. Failure to submit the request shall be considered a discharge without requirements, a violation of the CWC. Transfer shall be approved or disapproved in writing by the Executive Officer.

d. The Discharger shall for each fiscal year (July-June) pay the required annual filing fee in accordance with the current fee schedule established by the State Water Board by the due date specified in the annual invoice (typically issued during October of each fiscal year). The fee is for privilege of discharge authorized by this Order.

e. Except as expressly identified and authorized in this Order, the Discharger shall not use surface or groundwater as dilution to achieve compliance with effluent limitations in this Order.

f. Physical facilities shall be designed and constructed according to accepted engineering practice and shall be capable of full and consistent compliance with this Order when properly operated and maintained. Proper operation and maintenance shall be described in an Operation and Maintenance ("O&M") manual prepared by the design engineer. The operation and maintenance manual shall be reviewed at least every time a significant change, alteration, or expansion is made to the ST/WRF. The Discharger shall certify in every annual report whether the operation and maintenance manual is complete and reflective of the ST/WRF, and whether operation, maintenance, and staffing for the year being reported was as prescribed in the O&M manual.

g. **Prior to initial discharge to Discharge Point 001**, the Discharger shall forward to the Regional Water Board a copy of the agreement between the Discharger and the Fresno Irrigation District for discharges into Fancher Creek.

7. Compliance Schedules – NOT APPLICABLE

8. Master Reclamation Permit Provisions

a. **Prior to conveying recycled water to any User**, the Discharger shall complete the following:

i. Establish and have the authority to enforce rules and/or regulations for Users governing the design and construction of recycled water use facilities and the use of recycled water in accordance with the water recycling criteria established in Title 22, CCR and this Order, and the DPH Guidelines for the Use of Reclaimed Water

ii. Submit a copy of the rules and/or regulations and the adopted recycled water ordinance authorizing the rules and/or regulations to the Regional Water Board for Executive Officer approval;

iii. Develop and submit administrative procedures and User Agreements requiring compliance with the Discharger's rules and/or regulations to the Regional Water Board for Executive Officer approval;

iv. Provide DPH with copies of the items required by ii. and iii.

b. Upon Executive Officer approval of the Discharger's rules and/or regulations, recycled water ordinance, administrative procedures, and User Agreement, the Discharger may authorize specific reclamation projects on a case-by-case basis in accordance with the approved water recycling program.

c. The Discharger shall be responsible for ensuring that recycled water meets the quality standards of this Order and for the operation and maintenance of transport facilities and associated appurtenances. The Discharger shall hold the Users responsible for the application and use of recycled water on their designated use areas and associated operations and maintenance in accordance with all applicable requirements of Title 22, CCR and this Order.

d. The Discharger shall conduct periodic inspections of the Users' facilities and operations to monitor and ensure compliance with conditions of the User Agreement and this Order. The Discharger shall take whatever actions are necessary, including termination of delivery of recycled water to the User, to correct any User violations. The Discharger shall maintain a right-of-entry for all properties where recycled water is used and shall conduct regular inspections to assure cross connections are not made with potable water systems and that air-gap devices are installed and operable.

e. **At least 30 days prior to conveying recycled water to a new use site,** the Discharger shall submit a User Report to the Regional Water Board and DPH. The User Report shall include the following:

   i. The site location including a map showing the specific boundaries of the use site and the County Assessor Parcel Number(s) (if appropriate, if Parcel Number(s) are not appropriate to accurately describe the site location, the Discharger shall provide the Regional Water Board with enough information for the Regional Water Board to accurately determine the location of the proposed reclamation activities);

   ii. The name of the use site property owner and contact information;

   iii. The name of the User and contact information;

   iv. The specific use to be made of the recycled water, the use site acreage, the type of vegetation/crops to which the recycled water will be applied, and the anticipated volume of recycled water to be used;

   v. Identification of the on-site supervisor who is responsible for operation of the recycled water system;

   vi. Description of the recycled water management facilities and operations plan;

   vii. Plans and specifications that include the following:

a) Pipe locations of the recycled, potable, and auxiliary non-potable water systems;
b) Type and location of the outlets and plumbing fixtures that will be accessible to the public;
c) The methods and devices to be used to prevent backflow of recycled water into the public water system; and
d) Plan notes relating to recycled water specific installation and use requirements.

viii. Certification that the new use site conforms to the Discharger's rules and regulations;

ix. A copy of the signed User Agreement; and

x. The results of the cross-connection control test performed in accordance with the American Water Works Association and DPH guidelines. The results shall include a certification that DPH was notified of the initial cross-connection control test and was provided an opportunity to be present.

f. A copy of the User Agreement and the Discharger's rules and regulations governing the distribution and use of recycled water shall be maintained at the User's facilities and be available at all times for inspection by Regional Water Board staff, the Discharger, and DPH staff.

g. If, in the opinion of the Executive Officer, reclamation at a proposed new use site cannot be adequately regulated under the Master Reclamation Permit, a Report of Waste Discharge may be requested and individual Water Reclamation Requirements may be adopted.

VII. COMPLIANCE DETERMINATION

Compliance with the effluent limitations contained in section IV of this Order will be determined as specified below:

A. **BOD and TSS Effluent Limitations**. Compliance with the final effluent limitations for BOD and TSS shall be ascertained by 24-hour composite samples. Compliance with effluent limitations and Reclamation Specifications for percent removal shall be calculated using the arithmetic mean of 20°C BOD (5-day) and total suspended solids in effluent samples collected over a monthly period as a percentage of the arithmetic mean of the values for influent samples collected at approximately the same times during the same period.

B. **Average Annual Daily Flow Specification**. The Average Annual Daily Flow represents the daily average flow (in million gallons per day) as determined over a calendar year.

C. **Average Monthly Daily Flow**. The average monthly daily flow represents the daily average flow (in million gallons per day) as determined over a calendar month.

D. **Total Coliform Organisms Effluent Limitations and Reclamation Specifications**. For each day that an effluent sample is collected and analyzed for total coliform organisms, the 7-day median shall be determined by calculating the median concentration of total coliform bacteria in the effluent utilizing the bacteriological results of the last seven days for which analyses have been completed. If the 7-day median of total coliform organisms exceeds a most probable number (MPN) of 2.2 per 100 milliliters, the Discharger will be considered out of compliance for that parameter for that 1 day only within the reporting period.

E. **Mass Effluent Limitations.** Compliance with the mass effluent limitations will be determined at all times throughout the year.

F. **Total Residual Chlorine Effluent Limitations.** Continuous monitoring analyzers for chlorine residual or for dechlorination agent residual in the effluent are appropriate methods for compliance determination. A positive residual dechlorination agent in the effluent indicates that chlorine is not present in the discharge, which demonstrates compliance with the effluent limitations. This type of monitoring can also be used to prove that some chlorine residual exceedances are false positives. Continuous monitoring data showing either a positive dechlorination agent residual or a chlorine residual at or below the prescribed limit are sufficient to show compliance with the total residual chlorine effluent limitations, as long as the instruments are maintained and calibrated in accordance with the manufacturer's recommendations.

Any excursion above the 1-hour average or 4-day average total residual chlorine effluent limitations is a violation. If the Discharger conducts continuous monitoring and the Discharger can demonstrate, through data collected from a back-up monitoring system, that a chlorine spike recorded by the continuous monitor was not actually due to chlorine, then any excursion resulting from the recorded spike will not be considered an exceedance, but rather reported as a false positive.

ATTACHMENT A – DEFINITIONS

Arithmetic Mean (μ), also called the average, is the sum of measured values divided by the number of samples. For ambient water concentrations, the arithmetic mean is calculated as follows:

Arithmetic mean = $\mu = \Sigma x / n$ where: Σx is the sum of the measured ambient water concentrations, and n is the number of samples.

Average Monthly Effluent Limitation (AMEL): the highest allowable average of daily discharges over a calendar month, calculated as the sum of all daily discharges measured during a calendar month divided by the number of daily discharges measured during that month.

Average Weekly Effluent Limitation (AWEL): the highest allowable average of daily discharges over a calendar week (Sunday through Saturday), calculated as the sum of all daily discharges measured during a calendar week divided by the number of daily discharges measured during that week.

Best Practicable Treatment or Control (BPTC): BPTC is a requirement of State Water Resources Control Board Resolution 68-16 – "Statement of Policy with Respect to Maintaining High Quality of Waters in California" (referred to as the "Antidegradation Policy"). BPTC is the treatment or control of a discharge necessary to assure that, *"(a) a pollution or nuisance will not occur and (b) the highest water quality consistent with maximum benefit to the people of the State will be maintained."* Pollution is defined in California Water Code Section 13050(l). In general, an exceedance of a water quality objective in the Basin Plan constitutes "pollution".

Bioaccumulative pollutants are those substances taken up by an organism from its surrounding medium through gill membranes, epithelial tissue, or from food and subsequently concentrated and retained in the body of the organism.

Carcinogenic pollutants are substances that are known to cause cancer in living organisms.

Coefficient of Variation (*CV*) is a measure of the data variability and is calculated as the estimated standard deviation divided by the arithmetic mean of the observed values.

Daily Discharge: Daily Discharge is defined as either: (1) the total mass of the constituent discharged over the calendar day (12:00 am through 11:59 pm) or any 24-hour period that reasonably represents a calendar day for purposes of sampling (as specified in the permit), for a constituent with limitations expressed in units of mass or; (2) the unweighted arithmetic mean measurement of the constituent over the day for a constituent with limitations expressed in other units of measurement (e.g., concentration).

The daily discharge may be determined by the analytical results of a composite sample taken over the course of one day (a calendar day or other 24-hour period defined as a day) or by the arithmetic mean of analytical results from one or more grab samples taken over the course of the day.

For composite sampling, if 1 day is defined as a 24-hour period other than a calendar day, the analytical result for the 24-hour period will be considered as the result for the calendar day in which the 24-hour period ends.

Detected, but Not Quantified (DNQ) are those sample results less than the RL, but greater than or equal to the laboratory's MDL.

Dilution Credit is the amount of dilution granted to a discharge in the calculation of a water quality-based effluent limitation, based on the allowance of a specified mixing zone. It is calculated from the dilution ratio or determined through conducting a mixing zone study or modeling of the discharge and receiving water.

Effluent Concentration Allowance (ECA) is a value derived from the water quality criterion/objective, dilution credit, and ambient background concentration that is used, in conjunction with the coefficient of variation for the effluent monitoring data, to calculate a long-term average (LTA) discharge concentration. The ECA has the same meaning as waste load allocation (WLA) as used in U.S. EPA guidance (Technical Support Document For Water Quality-based Toxics Control, March 1991, second printing, EPA/505/2-90-001).

Estimated Chemical Concentration is the estimated chemical concentration that results from the confirmed detection of the substance by the analytical method below the ML value.

Inland Surface Waters are all surface waters of the State that do not include the ocean, enclosed bays, or estuaries.

Instantaneous Maximum Effluent Limitation: the highest allowable value for any single grab sample or aliquot (i.e., each grab sample or aliquot is independently compared to the instantaneous maximum limitation).

Instantaneous Minimum Effluent Limitation: the lowest allowable value for any single grab sample or aliquot (i.e., each grab sample or aliquot is independently compared to the instantaneous minimum limitation).

Maximum Daily Effluent Limitation (MDEL) means the highest allowable daily discharge of a pollutant, over a calendar day (or 24-hour period). For pollutants with limitations expressed in units of mass, the daily discharge is calculated as the total mass of the pollutant discharged over the day. For pollutants with limitations expressed in other units of measurement, the daily discharge is calculated as the arithmetic mean measurement of the pollutant over the day.

Median is the middle measurement in a set of data. The median of a set of data is found by first arranging the measurements in order of magnitude (either increasing or decreasing order). If the number of measurements (n) is odd, then the median = $X_{(n+1)/2}$. If n is even, then the median = $(X_{n/2} + X_{(n/2)+1})/2$ (i.e., the midpoint between the $n/2$ and $n/2+1$).

Method Detection Limit (MDL) is the minimum concentration of a substance that can be measured and reported with 99 percent confidence that the analyte concentration is greater

than zero, as defined in title 40 of the Code of Federal Regulations, Part 136, Attachment B, revised as of July 3, 1999.

Minimum Level (ML) is the concentration at which the entire analytical system must give a recognizable signal and acceptable calibration point. The ML is the concentration in a sample that is equivalent to the concentration of the lowest calibration standard analyzed by a specific analytical procedure, assuming that all the method specified sample weights, volumes, and processing steps have been followed.

Mixing Zone is a limited volume of receiving water that is allocated for mixing with a wastewater discharge where water quality criteria can be exceeded without causing adverse effects to the overall water body.

Not Detected (ND) are those sample results less than the laboratory's MDL.

Overflow is a spill, release, discharge, or diversion of untreated or partially treated wastewater.

Persistent pollutants are substances for which degradation or decomposition in the environment is nonexistent or very slow.

Pollutant Minimization Program (PMP) means waste minimization and pollution prevention actions that include, but are not limited to, product substitution, waste stream recycling, alternative waste management methods, and education of the public and businesses. The goal of the PMP shall be to reduce all potential sources of a priority pollutant(s) through pollutant minimization (control) strategies, including pollution prevention measures as appropriate, to maintain the effluent concentration at or below the water quality-based effluent limitation. Pollution prevention measures may be particularly appropriate for persistent bioaccumulative priority pollutants where there is evidence that beneficial uses are being impacted. The Regional Water Board may consider cost effectiveness when establishing the requirements of a PMP. The completion and implementation of a Pollution Prevention Plan, if required pursuant to California Water Code Section 13263.3(d), shall be considered to fulfill the PMP requirements.

Pollution Prevention means any action that causes a net reduction in the use or generation of a hazardous substance or other pollutant that is discharged into water and includes, but is not limited to, input change, operational improvement, production process change, and product reformulation (as defined in California Water Code Section 13263.3). Pollution prevention does not include actions that merely shift a pollutant in wastewater from one environmental medium to another environmental medium, unless clear environmental benefits of such an approach are identified to the satisfaction of the State or Regional Water Board.

Reporting Level (RL) is the ML (and its associated analytical method) chosen by the Discharger for reporting and compliance determination from the MLs included in this Order. The MLs included in this Order correspond to approved analytical methods for reporting a sample result that are selected by the Regional Water Board either from Appendix 4 of the SIP in accordance with section 2.4.2 of the SIP or established in accordance with section 2.4.3 of the SIP. The ML is based on the proper application of method-based analytical procedures for

sample preparation and the absence of any matrix interferences. Other factors may be applied to the ML depending on the specific sample preparation steps employed. For example, the treatment typically applied in cases where there are matrix-effects is to dilute the sample or sample aliquot by a factor of ten. In such cases, this additional factor must be applied to the ML in the computation of the RL.

Satellite Collection System is the portion, if any, of a sanitary sewer system owned or operated by a different public agency than the agency that owns and operates the wastewater treatment facility that a sanitary sewer system is tributary to.

Source of Drinking Water is any water designated as municipal or domestic supply (MUN) in a Regional Water Board Basin Plan.

Standard Deviation (σ) is a measure of variability that is calculated as follows:

$$\sigma = (\sum[(x - \mu)^2]/(n - 1))^{0.5}$$

where:

x is the observed value;
μ is the arithmetic mean of the observed values; and
n is the number of samples.

Toxicity Reduction Evaluation (TRE) is a study conducted in a step-wise process designed to identify the causative agents of effluent or ambient toxicity, isolate the sources of toxicity, evaluate the effectiveness of toxicity control options, and then confirm the reduction in toxicity. The first steps of the TRE consist of the collection of data relevant to the toxicity, including additional toxicity testing, and an evaluation of facility operations and maintenance practices, and best management practices. A Toxicity Identification Evaluation (TIE) may be required as part of the TRE, if appropriate. (A TIE is a set of procedures to identify the specific chemical(s) responsible for toxicity. These procedures are performed in three phases (characterization, identification, and confirmation) using aquatic organism toxicity tests.)

ATTACHMENT B – MAP

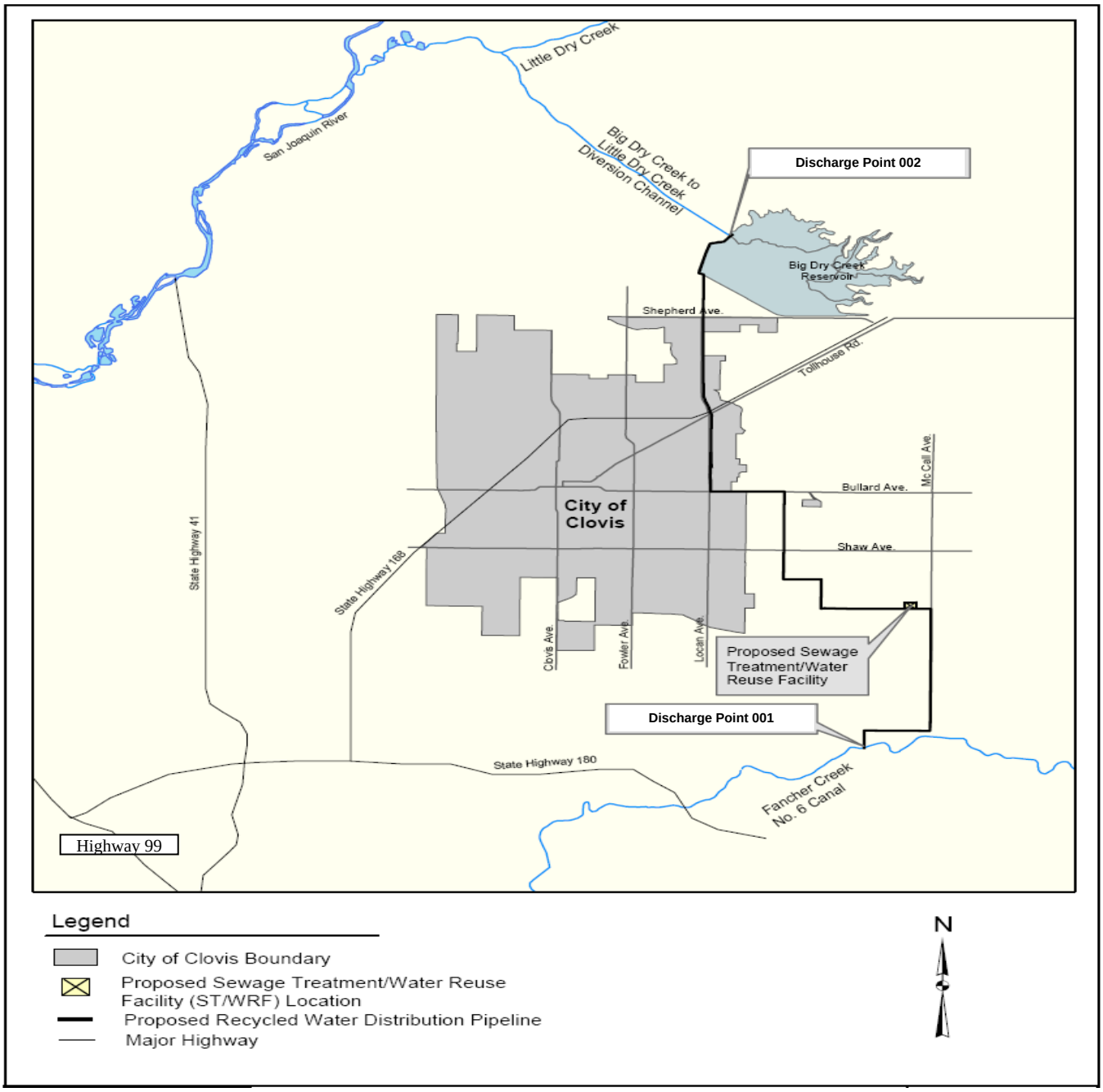

Drawing Reference: Malcolm Pirnie, Inc. *Not to scale*	SITE LOCATION MAP CITY OF CLOVIS CLOVIS SEWAGE TREATMENT /WATER REUSE FACILITY FRESNO COUNTY	

ATTACHMENT C – FLOW SCHEMATIC

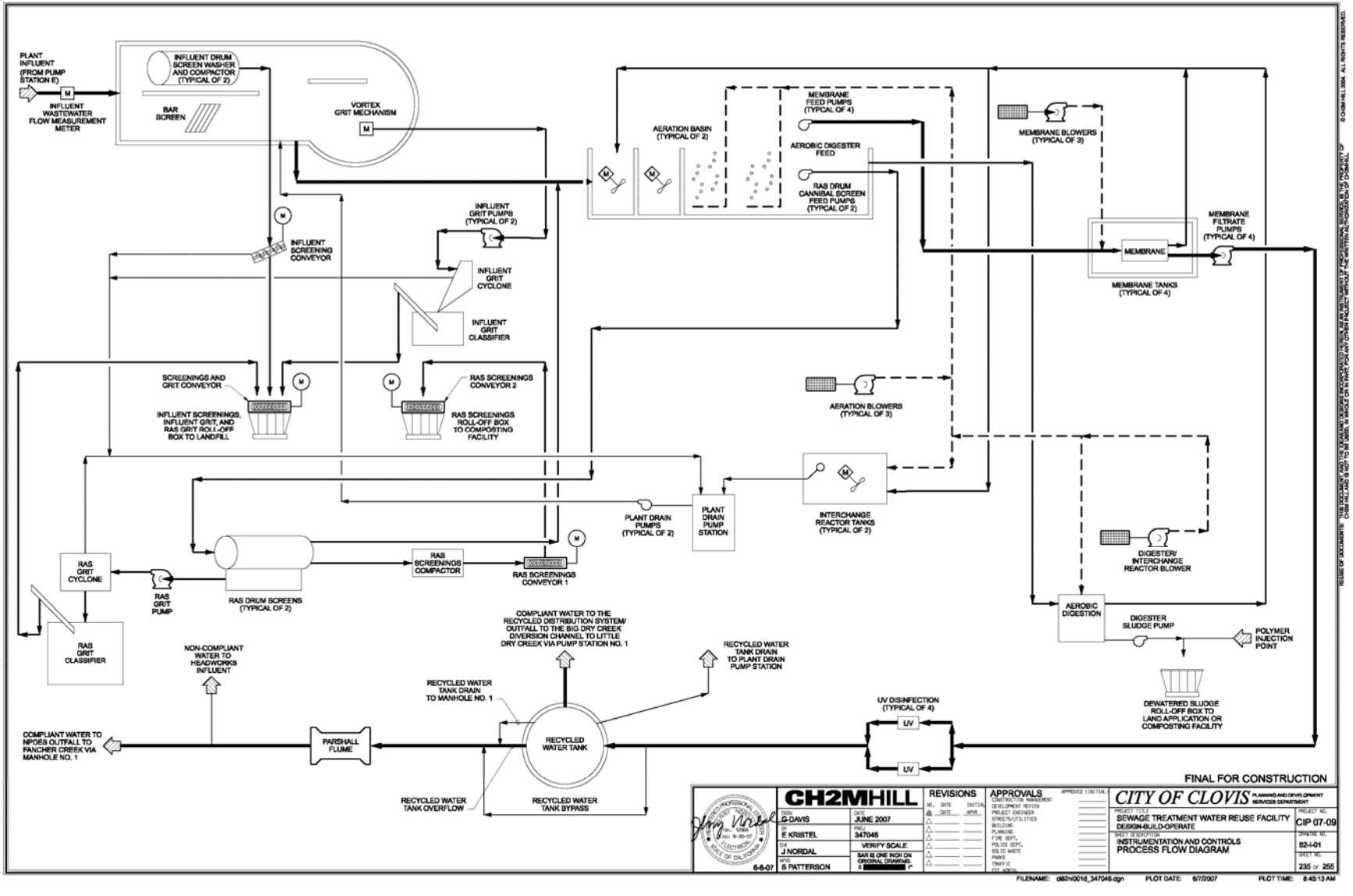

ATTACHMENT D –STANDARD PROVISIONS

I. STANDARD PROVISIONS – PERMIT COMPLIANCE

A. Duty to Comply

1. The Discharger must comply with all of the conditions of this Order. Any noncompliance constitutes a violation of the Clean Water Act (CWA) and the California Water Code (CWC) and is grounds for enforcement action, for permit termination, revocation and reissuance, or modification; or denial of a permit renewal application. (40 CFR 122.41(a).)

2. The Discharger shall comply with effluent standards or prohibitions established under Section 307(a) of the CWA for toxic pollutants and with standards for sewage sludge use or disposal established under Section 405(d) of the CWA within the time provided in the regulations that establish these standards or prohibitions, even if this Order has not yet been modified to incorporate the requirement. (40 CFR 122.41(a)(1).)

B. Need to Halt or Reduce Activity Not a Defense

It shall not be a defense for a Discharger in an enforcement action that it would have been necessary to halt or reduce the permitted activity in order to maintain compliance with the conditions of this Order. (40 CFR 122.41(c).)

C. Duty to Mitigate

The Discharger shall take all reasonable steps to minimize or prevent any discharge or sludge use or disposal in violation of this Order that has a reasonable likelihood of adversely affecting human health or the environment. (40 CFR 122.41(d).)

D. Proper Operation and Maintenance

The Discharger shall at all times properly operate and maintain all facilities and systems of treatment and control (and related appurtenances) which are installed or used by the Discharger to achieve compliance with the conditions of this Order. Proper operation and maintenance also includes adequate laboratory controls and appropriate quality assurance procedures. This provision requires the operation of backup or auxiliary facilities or similar systems that are installed by a Discharger only when necessary to achieve compliance with the conditions of this Order. (40 CFR 122.41(e).)

E. Property Rights

1. This Order does not convey any property rights of any sort or any exclusive privileges. (40 CFR 122.41(g).)

2. The issuance of this Order does not authorize any injury to persons or property or invasion of other private rights, or any infringement of state or local law or regulations. (40 CFR 122.5(c).)

F. Inspection and Entry

The Discharger shall allow the Regional Water Board, State Water Board, United States Environmental Protection Agency (USEPA), and/or their authorized representatives (including an authorized contractor acting as their representative), upon the presentation of credentials and other documents, as may be required by law, to (40 CFR 122.41(i); CWC § 13383):

1. Enter upon the Discharger's premises where a regulated facility or activity is located or conducted, or where records are kept under the conditions of this Order (40 CFR 122.41(i)(1));

2. Have access to and copy, at reasonable times, any records that must be kept under the conditions of this Order (40 CFR 122.41(i)(2));

3. Inspect and photograph, at reasonable times, any facilities, equipment (including monitoring and control equipment), practices, or operations regulated or required under this Order (40 CFR 122.41(i)(3)); and

4. Sample or monitor, at reasonable times, for the purposes of assuring Order compliance or as otherwise authorized by the CWA or the Water Code, any substances or parameters at any location. (40 CFR 122.41(i)(4).)

G. Bypass

1. Definitions

   a. “Bypass” means the intentional diversion of waste streams from any portion of a treatment facility. (40 CFR 122.41(m)(1)(i).)

   b. “Severe property damage” means substantial physical damage to property, damage to the treatment facilities, which causes them to become inoperable, or substantial and permanent loss of natural resources that can reasonably be expected to occur in the absence of a bypass. Severe property damage does not mean economic loss caused by delays in production. (40 CFR 122.41(m)(1)(ii).)

2. Bypass not exceeding limitations. The Discharger may allow any bypass to occur which does not cause exceedances of effluent limitations, but only if it is for essential maintenance to assure efficient operation. These bypasses are not subject to the provisions listed in Standard Provisions – Permit Compliance I.G.3, I.G.4, and I.G.5 below. (40 CFR 122.41(m)(2).)

3. Prohibition of bypass. Bypass is prohibited, and the Regional Water Board may take enforcement action against a Discharger for bypass, unless (40 CFR 122.41(m)(4)(i)):

    a. Bypass was unavoidable to prevent loss of life, personal injury, or severe property damage (40 CFR 122.41(m)(4)(i)(A));

    b. There were no feasible alternatives to the bypass, such as the use of auxiliary treatment facilities, retention of untreated wastes, or maintenance during normal periods of equipment downtime. This condition is not satisfied if adequate back-up equipment should have been installed in the exercise of reasonable engineering judgment to prevent a bypass that occurred during normal periods of equipment downtime or preventive maintenance (40 CFR 122.41(m)(4)(i)(B)); and

    c. The Discharger submitted notice to the Regional Water Board as required under Standard Provisions – Permit Compliance I.G.5 below. (40 CFR 122.41(m)(4)(i)(C).)

4. The Regional Water Board may approve an anticipated bypass, after considering its adverse effects, if the Regional Water Board determines that it will meet the three conditions listed in Standard Provisions – Permit Compliance I.G.3 above. (40 CFR 122.41(m)(4)(ii).)

5. Notice

    a. Anticipated bypass. If the Discharger knows in advance of the need for a bypass, it shall submit a notice, if possible at least 10 days before the date of the bypass. (40 C.F.R. § 122.41(m)(3)(i).)

    b. Unanticipated bypass. The Discharger shall submit notice of an unanticipated bypass as required in Standard Provisions - Reporting V.E below (24-hour notice). (40 CFR 122.41(m)(3)(ii).)

H. Upset

Upset means an exceptional incident in which there is unintentional and temporary noncompliance with technology based permit effluent limitations because of factors beyond the reasonable control of the Discharger. An upset does not include noncompliance to the extent caused by operational error, improperly designed treatment facilities, inadequate treatment facilities, lack of preventive maintenance, or careless or improper operation. (40 CFR 122.41(n)(1).)

1. Effect of an upset. An upset constitutes an affirmative defense to an action brought for noncompliance with such technology based permit effluent limitations if the requirements of Standard Provisions – Permit Compliance I.H.2 below are met. No determination made during administrative review of claims that noncompliance was

caused by upset, and before an action for noncompliance, is final administrative action subject to judicial review. (40 CFR 122.41(n)(2).).

2. Conditions necessary for a demonstration of upset. A Discharger who wishes to establish the affirmative defense of upset shall demonstrate, through properly signed, contemporaneous operating logs or other relevant evidence that (40 CFR 122.41(n)(3)):

   a. An upset occurred and that the Discharger can identify the cause(s) of the upset (40 CFR 122.41(n)(3)(i));

   b. The permitted facility was, at the time, being properly operated (40 CFR 122.41(n)(3)(ii));

   c. The Discharger submitted notice of the upset as required in Standard Provisions – Reporting V.E.2.b below (24-hour notice) (40 CFR 122.41(n)(3)(iii)); and

   d. The Discharger complied with any remedial measures required under Standard Provisions – Permit Compliance I.C above. (40 CFR 122.41(n)(3)(iv).)

3. Burden of proof. In any enforcement proceeding, the Discharger seeking to establish the occurrence of an upset has the burden of proof. (40 CFR 122.41(n)(4).)

II. STANDARD PROVISIONS – PERMIT ACTION

A. General

This Order may be modified, revoked and reissued, or terminated for cause. The filing of a request by the Discharger for modification, revocation and reissuance, or termination, or a notification of planned changes or anticipated noncompliance does not stay any Order condition. (40 CFR 122.41(f).)

B. Duty to Reapply

If the Discharger wishes to continue an activity regulated by this Order after the expiration date of this Order, the Discharger must apply for and obtain a new permit. (40 CFR 122.41(b).)

C. Transfers

This Order is not transferable to any person except after notice to the Regional Water Board. The Regional Water Board may require modification or revocation and reissuance of the Order to change the name of the Discharger and incorporate such other requirements as may be necessary under the CWA and the CWC. (40 CFR 122.41(l)(3); 122.61.)

III. STANDARD PROVISIONS – MONITORING

A. Samples and measurements taken for the purpose of monitoring shall be representative of the monitored activity. (40 CFR 122.41(j)(1).)

B. Monitoring results must be conducted according to test procedures under Part 136 or, in the case of sludge use or disposal, approved under Part 136 unless otherwise specified in Part 503 unless other test procedures have been specified in this Order. (40 CFR 122.41(j)(4); 122.44(i)(1)(iv).)

IV. STANDARD PROVISIONS – RECORDS

A. Except for records of monitoring information required by this Order related to the Discharger's sewage sludge use and disposal activities, which shall be retained for a period of at least five years (or longer as required by Part 503), the Discharger shall retain records of all monitoring information, including all calibration and maintenance records and all original strip chart recordings for continuous monitoring instrumentation, copies of all reports required by this Order, and records of all data used to complete the application for this Order, for a period of at least three (3) years from the date of the sample, measurement, report or application. This period may be extended by request of the Regional Water Board Executive Officer at any time. (40 CFR 122.41(j)(2).)

B. Records of monitoring information shall include:

1. The date, exact place, and time of sampling or measurements (40 CFR 122.41(j)(3)(i));

2. The individual(s) who performed the sampling or measurements (40 CFR 122.41(j)(3)(ii));

3. The date(s) analyses were performed (40 CFR 122.41(j)(3)(iii));

4. The individual(s) who performed the analyses (40 CFR 122.41(j)(3)(iv));

5. The analytical techniques or methods used (40 CFR 122.41(j)(3)(v)); and

6. The results of such analyses. (40 CFR 122.41(j)(3)(vi).)

C. Claims of confidentiality for the following information will be denied (40 CFR 122.7(b)):

1. The name and address of any permit applicant or Discharger (40 CFR 122.7(b)(1)); and

2. Permit applications and attachments, permits and effluent data. (40 CFR 122.7(b)(2).)

V. STANDARD PROVISIONS – REPORTING

A. Duty to Provide Information

The Discharger shall furnish to the Regional Water Board, State Water Board, or USEPA within a reasonable time, any information which the Regional Water Board, State Water Board, or USEPA may request to determine whether cause exists for modifying, revoking and reissuing, or terminating this Order or to determine compliance with this Order. Upon request, the Discharger shall also furnish to the Regional Water Board, State Water Board, or USEPA copies of records required to be kept by this Order. (40 CFR 122.41(h); CWC § 13267)

B. Signatory and Certification Requirements

1. All applications, reports, or information submitted to the Regional Water Board, State Water Board, and/or USEPA shall be signed and certified in accordance with Standard Provisions – Reporting V.B.2, V.B.3, V.B.4, and V.B.5 below. (40 CFR 122.41(k).)

2. All permit applications shall be signed by either a principal executive officer or ranking elected official. For purposes of this provision, a principal executive officer of a federal agency includes: (i) the chief executive officer of the agency, or (ii) a senior executive officer having responsibility for the overall operations of a principal geographic unit of the agency (e.g., Regional Administrators of USEPA). (40 CFR 122.22(a)(3).).

3. All reports required by this Order and other information requested by the Regional Water Board, State Water Board, or USEPA shall be signed by a person described in Standard Provisions – Reporting V.B.2 above, or by a duly authorized representative of that person. A person is a duly authorized representative only if:

    a. The authorization is made in writing by a person described in Standard Provisions – Reporting V.B.2 above (40 CFR 122.22(b)(1));

    b. The authorization specifies either an individual or a position having responsibility for the overall operation of the regulated facility or activity such as the position of plant manager, operator of a well or a well field, superintendent, position of equivalent responsibility, or an individual or position having overall responsibility for environmental matters for the company. (A duly authorized representative may thus be either a named individual or any individual occupying a named position.) (40 CFR 122.22(b)(2)); and

    c. The written authorization is submitted to the Regional Water Board and State Water Board. (40 CFR 122.22(b)(3).)

4. If an authorization under Standard Provisions – Reporting V.B.3 above is no longer accurate because a different individual or position has responsibility for the overall

operation of the facility, a new authorization satisfying the requirements of Standard Provisions – Reporting V.B.3 above must be submitted to the Regional Water Board and State Water Board prior to or together with any reports, information, or applications, to be signed by an authorized representative. (40 CFR 122.22(c).)

5. Any person signing a document under Standard Provisions – Reporting V.B.2 or V.B.3 above shall make the following certification:

   "I certify under penalty of law that this document and all attachments were prepared under my direction or supervision in accordance with a system designed to assure that qualified personnel properly gather and evaluate the information submitted. Based on my inquiry of the person or persons who manage the system or those persons directly responsible for gathering the information, the information submitted is, to the best of my knowledge and belief, true, accurate, and complete. I am aware that there are significant penalties for submitting false information, including the possibility of fine and imprisonment for knowing violations." (40 CFR 122.22(d).)

C. Monitoring Reports

1. Monitoring results shall be reported at the intervals specified in the Monitoring and Reporting Program (Attachment E) in this Order. (40 CFR 122.22(l)(4).)

2. Monitoring results must be reported on a Discharge Monitoring Report (DMR) form or forms provided or specified by the Regional Water Board or State Water Board for reporting results of monitoring of sludge use or disposal practices. (40 CFR 122.41(l)(4)(i).)

3. If the Discharger monitors any pollutant more frequently than required by this Order using test procedures approved under Part 136 or, in the case of sludge use or disposal, approved under Part 136 unless otherwise specified in Part 503, or as specified in this Order, the results of this monitoring shall be included in the calculation and reporting of the data submitted in the DMR or sludge reporting form specified by the Regional Water Board. (40 CFR 122.41(l)(4)(ii).)

4. Calculations for all limitations, which require averaging of measurements, shall utilize an arithmetic mean unless otherwise specified in this Order. (40 CFR 122.41(l)(4)(iii).)

D. Twenty-Four Hour Reporting

1. The Discharger shall report any noncompliance that may endanger health or the environment. Any information shall be provided orally within 24 hours from the time the Discharger becomes aware of the circumstances. A written submission shall also be provided within five (5) days of the time the Discharger becomes aware of the circumstances. The written submission shall contain a description of the noncompliance and its cause; the period of noncompliance, including exact dates and times, and if the noncompliance has not been corrected, the anticipated time it

is expected to continue; and steps taken or planned to reduce, eliminate, and prevent reoccurrence of the noncompliance. (40 CFR 122.41(l)(6)(i).)

2. The following shall be included as information that must be reported within 24 hours under this paragraph (40 CFR 122.41(l)(6)(ii)):

   a. Any unanticipated bypass that exceeds any effluent limitation in this Order. (40 CFR 122.41(l)(6)(ii)(A).)

   b. Any upset that exceeds any effluent limitation in this Order. (40 CFR 122.41(l)(6)(ii)(B).)

3. The Regional Water Board may waive the above-required written report under this provision on a case-by-case basis if an oral report has been received within 24 hours. (40 CFR 122.41(l)(6)(iii).)

E. Planned Changes

The Discharger shall give notice to the Regional Water Board as soon as possible of any planned physical alterations or additions to the permitted facility. Notice is required under this provision only when (40 CFR 122.41(l)(1)):

1. The alteration or addition to a permitted facility may meet one of the criteria for determining whether a facility is a new source in section 122.29(b) (40 CFR 122.41(l)(1)(i)); or

2. The alteration or addition could significantly change the nature or increase the quantity of pollutants discharged. This notification applies to pollutants that are not subject to effluent limitations in this Order. (40 CFR 122.41(l)(1)(ii).)

3. The alteration or addition results in a significant change in the Discharger's sludge use or disposal practices, and such alteration, addition, or change may justify the application of permit conditions that are different from or absent in the existing permit, including notification of additional use or disposal sites not reported during the permit application process or not reported pursuant to an approved land application plan. (40 CFR 122.41(l)(1)(iii).)

F. Anticipated Noncompliance

The Discharger shall give advance notice to the Regional Water Board or State Water Board of any planned changes in the permitted facility or activity that may result in noncompliance with General Order requirements. (40 CFR 122.41(l)(2).)

G. Other Noncompliance

The Discharger shall report all instances of noncompliance not reported under Standard Provisions – Reporting V.C, V.D, and V.E above at the time monitoring reports are

submitted. The reports shall contain the information listed in Standard Provision – Reporting V.E above. (40 CFR 122.41(l)(7).)

H. Other Information

When the Discharger becomes aware that it failed to submit any relevant facts in a permit application, or submitted incorrect information in a permit application or in any report to the Regional Water Board, State Water Board, or USEPA, the Discharger shall promptly submit such facts or information. (40 CFR 122.41(l)(8).)

VI. STANDARD PROVISIONS – ENFORCEMENT

A. The Regional Water Board is authorized to enforce the terms of this permit under several provisions of the CWC, including, but not limited to, Sections 13268, 13350, 13385, 13386, and 13387.

VII. ADDITIONAL PROVISIONS – NOTIFICATION LEVELS

A. Publicly-Owned Treatment Works (POTWs)

All POTWs shall provide adequate notice to the Regional Water Board of the following (40 CFR 122.42(b)):

1. Any new introduction of pollutants into the POTW from an indirect discharger that would be subject to sections 301 or 306 of the CWA if it were directly discharging those pollutants (40 CFR 122.42(b)(1)); and

2. Any substantial change in the volume or character of pollutants being introduced into that POTW by a source introducing pollutants into the POTW at the time of adoption of the Order. (40 CFR 122.42(b)(2).)

3. Adequate notice shall include information on the quality and quantity of effluent introduced into the POTW as well as any anticipated impact of the change on the quantity or quality of effluent to be discharged from the POTW. (40 CFR 122.42(b)(3).)

ATTACHMENT E – MONITORING AND REPORTING PROGRAM

Table of Contents

Attachment E – Monitoring and Reporting Program (MRP) E-1
I. General Monitoring Provisions E-1
II. Monitoring Locations E-2
III. Influent Monitoring Requirements E-2
A. Monitoring Location INF-001 ..... E-2
IV. Effluent Monitoring Requirements E-3
A. Monitoring Location EFF-A E-3
B. Monitoring Location EFF-001 ..... E-5
C. Monitoring Location EFF-002 ..... E-5
V. Whole Effluent Toxicity Testing Requirements E-5
VI. Land Discharge Monitoring Requirements—NOT APPLICABLE E-8
VII. Reclamation Monitoring Requirements E-8
A. Monitoring Location EFF-A and EFF-002 ..... E-8
B. Recycled Water Users Summary Report E-8
VIII. Receiving Water Monitoring Requirements – Surface Water E-9
A. Monitoring Location R-001U, R-001D, R-002U, and R-002D E-9
B. Monitoring Location R-003U and R-003D E-10
IX. Other Monitoring Requirements E-11
A. Biosolids E-11
B. Municipal Water Supply E-12
C. Monitoring Location INT-001 ..... E-13
X. Reporting Requirements E-13
A. General Monitoring and Reporting Requirements E-13
B. Self Monitoring Reports (SMRs) E-14
C. Discharge Monitoring Reports (DMRs) E-16
D. Other Reports E-17

List of Tables

Table E-1. Monitoring Station Locations E-2
Table E-2. Influent Monitoring E-3
Table E-3. Effluent Monitoring Discharge Points 001, 002, REC-001 ..... E-3
Table E-4. Effluent Monitoring Discharge 001 ..... E-5
Table E-5. Effluent Monitoring Discharge 002, REC-001 ..... E-5
Table E-6. Chronic Toxicity Testing Dilution Series E-7
Table E-7a. Receiving Water Monitoring Requirements E-9
Table E-7b. Receiving Water Monitoring Requirements E-11
Table E-8. Municipal Water Supply Monitoring Requirements E-12
Table E-9. Turbidity Monitoring Requirements E-13
Table E-10. Monitoring Periods and Reporting Schedule E-16

ATTACHMENT E – MONITORING AND REPORTING PROGRAM (MRP)

Code of Federal Regulations (CFR) section 122.48 requires that all NPDES permits specify monitoring and reporting requirements. California Water Code Sections 13267 and 13383 also authorize the Regional Water Quality Control Board (Regional Water Board) to require technical and monitoring reports. This MRP establishes monitoring and reporting requirements that implement federal and state regulations.

I. GENERAL MONITORING PROVISIONS

A. Samples and measurements taken as required herein shall be representative of the volume and nature of the monitored discharge. All samples shall be taken at the monitoring locations specified below and, unless otherwise specified, before the monitored flow joins or is diluted by any other waste stream, body of water, or substance. Monitoring locations shall not be changed without notification to and the approval of this Regional Water Board.

B. Chemical, bacteriological, and bioassay analyses shall be conducted at a laboratory certified for such analyses by the State Department of Public Health. In the event a certified laboratory is not available to the Discharger, analyses performed by a noncertified laboratory will be accepted provided a Quality Assurance-Quality Control Program is instituted by the laboratory. A manual containing the steps followed in this program must be kept in the laboratory and shall be available for inspection by Regional Water Board staff. The Quality Assurance-Quality Control Program must conform to USEPA guidelines or to procedures approved by the Regional Water Board.

C. All analyses shall be performed in a laboratory certified to perform such analyses by the California Department of Public Health. Laboratories that perform sample analyses shall be identified in all monitoring reports.

D. Appropriate flow measurement devices and methods consistent with accepted scientific practices shall be selected and used to ensure the accuracy and reliability of measurements of the volume of monitored discharges. All monitoring instruments and devices used by the Discharger to fulfill the prescribed monitoring program shall be properly maintained and calibrated as necessary to ensure their continued accuracy. All flow measurement devices shall be calibrated at least once per year to ensure continued accuracy of the devices.

E. Monitoring results, including noncompliance, shall be reported at intervals and in a manner specified in this Monitoring and Reporting Program.

II. MONITORING LOCATIONS

The Discharger shall establish the following monitoring locations to demonstrate compliance with the effluent limitations, discharge specifications, and other requirements in this Order:

Table E-1. Monitoring Station Locations

Discharge Point Name	Monitoring Location Name	Monitoring Location Description (include Latitude and Longitude when available)
--	INF-001	ST/WRF influent, prior to any treatment
001, 002, REC-001	EFF-A	After disinfection and prior to storage in steel tank
--	EFF-001	After the steel storage tank and prior to discharge to Fancher Creek where most representative of the effluent discharged
--	EFF-002	After the steel storage tank and prior to discharge to the Diversion Channel where most representative of the effluent discharged and routed to recycled water use sites
001, 002, REC-001	INT-001	After membrane filters and prior to the disinfection process
--	R-001U	In the Fresno Canal, approximately 100 feet upstream of the outfall for Discharge Point 001 (immediately upstream of where the Fresno Canal splits to become Mill Ditch and Fancher Creek).
--	R-001D	In Fancher Creek, approximately 100 feet downstream of the outfall for Discharge Point 001.
--	R-002U	In Little Dry Creek, approximately 7,250 feet upstream of the outfall for Discharge Point 002, where there is bridge access over Little Dry Creek.
--	R-002D	In Little Dry Creek, approximately 4,550 feet downstream of the outfall for Discharge Point 002, east of Friant Road at a flow measurement weir in Little Dry Creek.
--	R-003U	With Regional Water Board staff concurrence, at a location representative of the water quality immediately upstream of the Discharge Point 002 outfall to the Diversion Channel and not influenced by the ST/WRF discharge.
--	R-003D	With Regional Water Board staff concurrence, in the Diversion Channel downstream of the Discharge Point 002 outfall at a location most likely to capture any influence of the ST/WRF discharge.
--	BIO-001	Representative of the dewatered biosolids shipped offsite for disposal and/or composting.
--	SPL-001	Water supply for the area served by the ST/WRF.

III. INFLUENT MONITORING REQUIREMENTS

A. Monitoring Location INF-001

1. The Discharger shall monitor influent to the ST/WRF at M-INF as follows:

Table E-2. Influent Monitoring

Parameter	Units	Sample Type	Minimum Sampling Frequency	Required Analytical Test Method
Flow	MGD	Metered	Continuous	
Biochemical Oxygen Demand (BOD_5) @ 20°C	mg/L	24-hr Composite[1]	3/week[3]	[2]
Total Suspended Solids (TSS)	mg/L	24-hr Composite[1]	3/week[3]	[2]
Settleable Solids	mL/L	Grab	1/week	[2]
pH	standard units	Grab	5/week	[2]
Electrical Conductivity at 25° C	umhos/cm	24-hr Composite[1]	3/week[3]	[2]

1 24-hour flow proportional composite consisting of at least 8 individual aliquots.

2 Samples shall be analyzed using the methods and procedures described in the 40 CFR 136. The Discharger shall use a Department of Public Health licensed laboratory capable of providing method detection limits and minimum levels sufficient to determine compliance with effluent limitations.

3 Nonconsecutive days

IV. EFFLUENT MONITORING REQUIREMENTS

A. Monitoring Location EFF-A

1. The Discharger shall monitor at EFF-A as follows. If more than one analytical test method is listed for a given parameter, the Discharger must select from the listed methods:

Table E-3. Effluent Monitoring Discharge Points 001, 002, REC-001

Parameter	Units	Sample Type	Minimum Sampling Frequency	Required Analytical Test Method
Flow	MGD	Meter	Continuous	
Biochemical Oxygen Demand (BOD_5) @ 20°C	mg/L	24-hr Composite[2]	5/week[3]	[1]
	lbs/day	calculated	--	--
	% removal	calculated	--	--
Total Suspended Solids (TSS)	mg/L	24-hr Composite[2]	5/week[3]	[1]
	lbs/day	calculated	--	--
	% removal	calculated	--	--
Settleable Solids	mL/L	Grab	5/week[3]	[1]
Total Coliform Organisms	MPN/ 100 mL	Grab	5/week[3] 1/day[15]	[1]
pH	standard units	Grab	5/week[3]	[1]
Temperature[14]	°F or °C	Meter	Continuous	[1]
Dissolved Oxygen	mg/L	Meter	Continuous	[1]
Electrical Conductivity @ 25°C	µmhos/cm	24-hr Composite[2]	5/week[3]	[1]

Parameter	Units	Sample Type	Minimum Sampling Frequency	Required Analytical Test Method
Total Dissolved Solids	mg/L	Grab	1/month	[1]
Ammonia, Total (as N)[4,5]	mg/L	Grab	1/week	[1]
Nitrate (as N)	mg/L	Grab	1/week	[1]
Nitrite (as N)	mg/L	Grab	1/week	[1]
Nitrogen, Total (as N)	mg/L	Grab	1/week	[1]
Total Residual Chlorine	mg/L	Meter[6]	Continuous	[1]
Aluminum, Total	µg/L	Grab	1/month	[1]
General Minerals[7]	mg/L	Grab	1/year	[1]
Priority Pollutants[8,9]	µg/L	As Appropriate[10]	1/semi-annual[11]	[1]
Dioxin[12]	pg/L	Grab	1/year	[13]
Hardness (as $CaCO_3$)	mg/L	Grab	1/month	[1]

[1] Samples shall be analyzed using the methods and procedures described in the 40 CFR 136. The Discharger shall use a Department of Public Health licensed laboratory capable of providing method detection limits and minimum levels sufficient to determine compliance with effluent limitations.

[2] 24-hour flow proportioned composite consisting of at least 8 individual aliquots.

[3] Samples shall be collected on separate days.

[4] Concurrent with acute toxicity monitoring.

[5] Temperature and pH data shall be collected concurrently with ammonia sample.

[6] Total residual chlorine must be monitored with a method sensitive to and accurate at the permitted level of 0.01 mg/L.

[7] General minerals shall include the following: boron, calcium, iron, magnesium, potassium, sodium, chloride, manganese, phosphorus, sulfate, and total alkalinity (including alkalinity series), and include verification that the analysis is complete (i.e., cation/anion balance).

[8] For priority pollutant constituents with effluent limitations, detection limits shall be below the effluent limitations. If the lowest minimum level (ML) published in Appendix 4 of the Policy for Implementation of Toxics Standards for Inland Surface Waters, Enclosed Bays, and Estuaries of California (State Implementation Plan or SIP) is not below the effluent limitation, the detection limit shall be the lowest ML. For priority pollutant constituents without effluent limitations, the detection limits shall be equal to or less than the lowest ML published in Appendix 4 of the SIP.

[9] Priority pollutants consist of the constituents listed in the most recent National Toxics Rule and California Toxics Rule. The laboratory shall investigate and report all unknown peaks with concentrations approaching internal standards utilizing tentative identified compound (TIC) protocol.

[10] Volatile samples and phthalate esters shall be grab samples, the remainder shall be 24-hour flow-proportioned composite samples.

[11] Samples shall be collected once each six months (1/semi-annual) for 3 years and 1/year thereafter.

[12] The Discharger shall test for each of the 17 TCDD congeners listed in Table 4 of the SIP. The Discharger shall report the analytical results of the effluent monitoring for each congener, including the minimum quantifiable level (ML), the minimum detection level (MDL), and the measured or estimated concentration. The Discharger shall multiply each measured or estimated congener concentration by its respective toxicity equivalency factor (TEF) (see Section 3 of the SIP for TEFs) and report the sum of these products.

[13] Samples shall be analyzed using EPA Method 1613.

[14] Monitoring shall occur at the outfalls to Fancher Creek and the Diversion Channel.

[15] Samples shall be collected daily when discharging to Discharge Point REC-001.

B. Monitoring Location EFF-001

1. The Discharger shall monitor at EFF-001 as follows when discharging effluent to Discharge Point 001:

Table E-4. Effluent Monitoring Discharge 001

Parameter	Units	Sample Type	Minimum Sampling Frequency
Flow	MGD	Meter	Continuous

C. Monitoring Location EFF-002

1. The Discharger shall monitor at EFF-002 as follows when discharging effluent to Discharge Point 002 and/or REC-001:

Table E-5. Effluent Monitoring Discharge 002, REC-001

Parameter	Units	Sample Type	Minimum Sampling Frequency
Volume[1]	MG	Meter	Continuous

[1] The monitoring system shall be capable of measuring the volume of effluent discharged to the recycled water use sites and the volume of effluent discharged to the Diversion Channel at Discharge Point 002. The total volume of effluent discharged to the Diversion Channel on a daily basis shall be reported in the monthly self monitoring reports.

V. WHOLE EFFLUENT TOXICITY TESTING REQUIREMENTS

A. **Acute Toxicity Testing.** The Discharger shall conduct acute toxicity testing to determine whether the effluent is contributing acute toxicity to the receiving waters. The Discharger shall meet the following acute toxicity testing requirements:

1. *Monitoring Frequency* – the Discharger shall perform **quarterly** (1/quarter) acute toxicity testing, concurrent with effluent ammonia sampling, when discharges to Discharge Points 001 and/or 002 are occurring.

2. *Sample Types* – For static non-renewal and static renewal testing, the samples shall be flow proportional 24-hour composites and shall be representative of the volume and quality of the discharge. The effluent samples shall be taken at the effluent monitoring locations EFF-A.

3. *Test Species* – Test species shall be fathead minnows (*Pimephales promelas*).

4. *Methods* – The acute toxicity testing samples shall be analyzed using EPA-821-R-02-012, Fifth Edition. Temperature, total residual chlorine, and pH shall be recorded at the time of sample collection. No pH adjustment may be made unless approved by the Executive Officer.

5. *Test Failure* – If an acute toxicity test does not meet all test acceptability criteria, as specified in the test method, the Discharger must re-sample and re-test as soon as possible, not to exceed 7 days following notification of test failure.

B. **Chronic Toxicity Testing**. The Discharger shall conduct three species chronic toxicity testing to determine whether the effluent is contributing chronic toxicity to the receiving waters. The Discharger shall meet the following chronic toxicity testing requirements:

1. *Monitoring Frequency* – the Discharger shall perform **quarterly** (1/quarter) three species chronic toxicity testing when discharges to Discharge Points001 and/or 002 are occurring.

2. *Sample Types* – Effluent samples shall be flow proportional 24-hour composites and shall be representative of the volume and quality of the discharge. The effluent samples shall be taken at the effluent monitoring location EFF-A. The receiving water controls shall be a grab sample obtained from R-001U (Fancher Creek) and a grab sample obtained from R-002U(Little Dry Creek). If monitoring locations R-001U and R-002U are dry or an insufficient volume of water exists to collect a proper sample, laboratory water shall be used as the control.

3. *Sample Volumes* – Adequate sample volumes shall be collected to provide renewal water to complete the test in the event that the discharge is intermittent.

4. *Test Species* – Chronic toxicity testing measures sublethal (e.g. reduced growth, reproduction) and/or lethal effects to test organisms exposed to an effluent compared to that of the control organisms. The Discharger shall conduct chronic toxicity tests with:

   - The cladoceran, water flea, *Ceriodaphnia dubia* (survival and reproduction test);
   - The fathead minnow, *Pimephales promelas* (larval survival and growth test); and
   - The green alga, *Selenastrum capricornutum* (growth test).

5. *Methods* – The presence of chronic toxicity shall be estimated as specified in *Short-term Methods for Estimating the Chronic Toxicity of Effluents and Receiving Waters to Freshwater Organisms, Fourth Edition,* EPA/821-R-02-013, October 2002.

6. *Reference Toxicant* – As required by the SIP, all chronic toxicity tests shall be conducted with concurrent testing with a reference toxicant and shall be reported with the chronic toxicity test results.

7. *Dilutions* – If toxicity is found in any of the 100 percent effluent tests, the chronic toxicity testing shall be performed using the dilution series identified in Table E-6, below. The receiving water controls shall be used as the diluent unless the receiving water is toxic or an insufficient volume of water exists to collect a proper sample, in which case, laboratory control water may be used as the diluent.

8. *Test Failure* –The Discharger must re-sample and re-test as soon as possible, but no later than fourteen (14) days after receiving notification of a test failure. A test failure is defined as follows:

a. The reference toxicant test or the effluent test does not meet all test acceptability criteria as specified in the *Short-term Methods for Estimating the Chronic Toxicity of Effluents and Receiving Waters to Freshwater Organisms, Fourth Edition*, EPA/821-R-02-013, October 2002 (Method Manual), and its subsequent amendments or revisions; or

b. The percent minimum significant difference (PMSD) measured for the test exceeds the upper PMSD bound variability criterion in Table 6 on page 52 of the Method Manual. (A retest is only required in this case if the test results do not exceed the monitoring trigger specified in Special Provisions VI.C.2.a.iii.)

Table E-6. Chronic Toxicity Testing Dilution Series

Sample	Dilutions (%)					Controls	
	100	75	50	25	12.5	Receiving Water	Laboratory Water[2]
% Effluent	100	75	50	25	12.5	0	0
% Receiving Water	0	25	50	75	87.5	100	0
% Laboratory Water[1,2]	0	25	50	75	87.5	0	100

[1] Laboratory water shall only be used when the conditions specified in MRP Section V.B.2 are met.
[2] Laboratory water shall meet EPA protocol requirements.

C. **WET Testing Notification Requirements**. The Discharger shall notify the Regional Water Board within 24-hours after the receipt of test results exceeding the monitoring trigger during regular or accelerated monitoring, or an exceedance of the acute toxicity effluent limitation.

D. **WET Testing Reporting Requirements**. All toxicity test reports shall include the contracting laboratory's complete report provided to the Discharger and shall be in accordance with the appropriate "Report Preparation and Test Review" sections of the method manuals. At a minimum, whole effluent toxicity monitoring shall be reported as follows:

1. **Chronic WET Reporting.** Regular chronic toxicity monitoring results shall be reported to the Regional Water Board within 30 days following completion of the test, and shall contain, at minimum:

   a. The results expressed in TUc, measured as 100/NOEC, and also measured as $100/LC_{50}$, $100/EC_{25}$, $100/IC_{25}$, and $100/IC_{50}$, as appropriate.

   b. The statistical methods used to calculate endpoints;

   c. The statistical output page, which includes the calculation of the percent minimum significant difference (PMSD);

   d. The dates of sample collection and initiation of each toxicity test; and

   e. The results compared to the numeric toxicity monitoring trigger.

   Additionally, the monthly discharger self-monitoring reports shall contain an updated chronology of chronic toxicity test results expressed in TUc, and organized by test

species, type of test (survival, growth or reproduction), and monitoring frequency, i.e., either quarterly, monthly, accelerated, or TRE.

2. **Acute WET Reporting.** Acute toxicity test results shall be submitted with the monthly discharger self-monitoring reports and reported as percent survival.

3. **TRE Reporting.** Reports for Toxicity Reduction Evaluations shall be submitted in accordance with the schedule contained in the Discharger's approved TRE Work Plan.

4. **Quality Assurance (QA).** The Discharger must provide the following information for QA purposes (If applicable):

   a. Results of the applicable reference toxicant data with the statistical output page giving the species, NOEC, LOEC, type of toxicant, dilution water used, concentrations used, PMSD, and dates tested.

   b. The reference toxicant control charts for each endpoint, which include summaries of reference toxicant tests performed by the contracting laboratory.

   c. Any information on deviations or problems encountered and how they were dealt with.

VI. LAND DISCHARGE MONITORING REQUIREMENTS—NOT APPLICABLE

VII. RECLAMATION MONITORING REQUIREMENTS

A. Monitoring Location EFF-A and EFF-002

1. The Discharger shall monitor recycled water at EFF-A and EFF-002 as follows:

   See MRP Sections IV.A.1 and IV.C.1.

B. Recycled Water Users Summary Report

1. The Discharger shall submit a **quarterly** (1/quarter) recycled water users summary report to the Executive Officer containing the following information:

   a. Total volume of recycled water supplied to all recycled water users during the quarter;

   b. Total number of recycled water use sites; and

   c. Map showing the locations of the recycled water use sites.

   A copy of each summary report shall be sent to DPH.

2. The Discharger shall submit an **annual** (1/year) recycled water users compliance report containing the following information for each recycled water use site:

a. Name of the recycled water use site;
b. Owner of the recycled water use site;
c. Address of the recycled water use site (if available);
d. Name of the on-site recycled water use site supervisor;
e. Phone number of the on-site recycled water use site supervisor;
f. Number of acres that received recycled water;
g. Type of vegetation/crops to which the recycled water was applied;
h. Total volume of recycled water delivered to the recycled water use site during the year;
i. Total nitrogen loading rate (lbs/acre) on an annual basis. Loading rates shall be calculated using the applied volume of recycled water and the results of the total nitrogen monitoring required by MRP Section VII.A.1. Application rates (lbs/acre/month) of supplemental nitrogen shall also be reported;
j. Number of recycled water use site inspections conducted by the Discharger; and
k. Violations of the Discharger's rules and regulations for recycled water users. The Discharger shall include a description of the noncompliance and its cause, including the period of noncompliance, and if the noncompliance has not been corrected; the anticipated time it is expected to continue; and the steps taken or planned to reduce, eliminate, and prevent recurrence of the noncompliance.

VIII. RECEIVING WATER MONITORING REQUIREMENTS – SURFACE WATER

A. Monitoring Location R-001U, R-001D, R-002U, and R-002D

1. The Discharger shall monitor Fancher Creek consistent with Table E-7a at R-001U and R-001D only when there is a measurable flow at R-001U and effluent discharges to Discharge Point 001 are occurring. The Discharger shall monitor Little Dry Creek consistent with Table E-7a only when there is measurable flow at R-002U and effluent discharges to Discharge Point 002 are occurring.

Table E-7a. Receiving Water Monitoring Requirements

Parameter	Units	Sample Type	Minimum Sampling Frequency[1]	Required Analytical Test Method
Flow	MGD	Estimate	5/week	
Dissolved Oxygen	mg/L	Grab	1/week	[3]
pH	standard units	Grab	1/week	[3]
Temperature	°F or °C	Grab	1/week	[3]
Electrical Conductivity @ 25°C	µmhos/cm	Grab	1/week	[3]
Ammonia, Total (as N)	mg/L	Grab	1/week	[3]
Ammonia, Un-ionized (as N)[4,10]	mg/L	Calculated	1/week	[3]
Fecal Coliform Organisms	MPN/100 mL	Grab	1/week[5]	[3]

Parameter	Units	Sample Type	Minimum Sampling Frequency[1]	Required Analytical Test Method
Turbidity	NTU	Grab	1/week	[3]
Hardness, Total (as $CaCO_3$)	mg/L	Grab	1/month[6]	[3]
Priority Pollutants[7,8,9]	Various	Grab	1/year[2]	[3]

[1] If a discharge is intermittent rather than continuous, the Discharger shall monitor and record data for all of the constituents listed above on the first day of each intermittent discharge and thereafter the frequencies in the schedule shall apply. In no event shall the Discharger be required to monitor and record data more often than twice the frequencies listed in the schedule.

[2] Priority pollutant sampling shall occur at least once per calendar year at R-001U and R-002U regardless of whether a discharge occurred during the calendar year.

[3] Samples shall be analyzed using the methods and procedures described in 40 CFR 136.

[4] Temperature and pH shall be determined at the time of sample collection for the calculation of un-ionized ammonia.

[5] One additional sample shall be collected per 30-day period to demonstrate compliance with receiving water limitations V.A.1.b and V.A.2.a.

[6] 1/month sampling frequency shall be performed for 2 years and 1/quarter thereafter.

[7] Samples shall be collected at R-001U and R-002U.

[8] For priority pollutant constituents with effluent limitations, detection limits shall be below the effluent limitations. If the lowest minimum level (ML) published in Appendix 4 of the Policy for Implementation of Toxics Standards for Inland Surface Waters, Enclosed Bays, and Estuaries of California (State Implementation Plan or SIP) is not below the effluent limitation, the detection limit shall be the lowest ML. For priority pollutant constituents without effluent limitations, the detection limits shall be equal to or less than the lowest ML published in Appendix 4 of the SIP.

[9] Priority pollutants consist of the constituents listed in the most recent National Toxics Rule and California Toxics Rule. The laboratory shall investigate and report all unknown peaks with concentrations approaching internal standards utilizing tentative identified compound (TIC) protocol.

[10] Sampling not required for Little Dry Creek.

2. The Discharger shall submit an **annual** (1/year) report that specifies the volume (in acre-feet) of water released from the Fresno Canal into the Fancher Creek system between 1 January and 31 December. The report shall also include the volume (in acre-feet) of ST/WRF effluent discharged via Discharge Point 001 between 1 January and 31 December. This annual report can be combined with the Annual Operations Report required by MRP Section X.D.2.

3. In conducting the receiving water sampling, a separate log shall be kept of the receiving water conditions. Notes on receiving water conditions shall be summarized in the monitoring report. Attention shall be given to the presence or absence of:

   a. Floating or suspended matter
   b. Discoloration
   c. Bottom deposits
   d. Aquatic life
   e. Visible films, sheens, or coatings
   f. Fungi, slimes, or objectionable growths
   g. Potential nuisance conditions

B. Monitoring Location R-003U and R-003D

1. The Discharger shall monitor the Diversion Channel consistent with Table E-7b at R-003U and R-003D only when water is being released from Big Dry Creek Reservoir to the Diversion Channel and effluent discharges to Discharge Point 002 are occurring.

Table E-7b. Receiving Water Monitoring Requirements

Parameter	Units	Sample Type	Minimum Sampling Frequency	Required Analytical Test Method
Dissolved Oxygen	mg/L	Grab	2/year	[1]
pH	standard units	Grab	2/year	[1]
Temperature	°F or °C	Grab	2/year	[1]
Electrical Conductivity @ 25°C	µmhos/cm	Grab	2/year	[1]
Ammonia, Total (as N)	mg/L	Grab	2/year	[1]
Ammonia, Un-ionized (as N)[2]	mg/L	Calculated	2/year	[1]
Fecal Coliform Organisms	MPN/100 mL	Grab	2/year	[1]
Turbidity	NTU	Grab	2/year	[1]
Hardness, Total (as $CaCO_3$)	mg/L	Grab	2/year	[1]
Priority Pollutants[3,4,5]	Various	Grab	1/year[6]	[1]

1 Samples shall be analyzed using the methods and procedures described in 40 CFR 136.

2 Temperature and pH shall be determined at the time of sample collection for the calculation of un-ionized ammonia.

3 Samples shall be collected at R-003U.

4 For priority pollutant constituents with effluent limitations, detection limits shall be below the effluent limitations. If the lowest minimum level (ML) published in Appendix 4 of the Policy for Implementation of Toxics Standards for Inland Surface Waters, Enclosed Bays, and Estuaries of California (State Implementation Plan or SIP) is not below the effluent limitation, the detection limit shall be the lowest ML. For priority pollutant constituents without effluent limitations, the detection limits shall be equal to or less than the lowest ML published in Appendix 4 of the SIP.

5 Priority pollutants consist of the constituents listed in the most recent National Toxics Rule and California Toxics Rule. The laboratory shall investigate and report all unknown peaks with concentrations approaching internal standards utilizing tentative identified compound (TIC) protocol.

6 Priority pollutant sampling shall occur at least once per calendar year regardless of whether a discharge occurred during the calendar year and only if water was released from Big Dry Creek Reservoir to the Diversion Channel.

IX. OTHER MONITORING REQUIREMENTS

A. Biosolids

Sludge in this document means the solid, semisolid, and liquid residues removed during the primary, secondary, or advanced wastewater treatment processes. Biosolids refers to sludge that has been treated and tested and shown to be capable of being beneficially and legally used pursuant to federal and state regulations as a soil amendment for agriculture, silviculture, horticulture, and land reclamation activities.

1. **Monitoring Location BIO-001**

   1. A composite sample of biosolids shall be collected annually at Monitoring Location BIO-001 in accordance with EPA's POTW Sludge Sampling and Analysis Guidance Document, August 1989, and tested for priority pollutants listed in 40 CFR section 122 Appendix D, Tables II and III (excluding total phenols).

   2. A composite sample of biosolids shall be collected at Monitoring Location BIO-001 when biosolids is removed from the ST/WRF for disposal in accordance with

USEPA's POTW Sludge Sampling and Analysis Guidance Document, August 1989, and tested for the metals listed in Title 22, CCR.

3. Sampling records shall be retained for a minimum of **five years**. A log shall be kept of biosolids quantities generated and of handling and disposal activities. The frequency of entries is discretionary; however, the log should be complete enough to serve as a basis for part of the annual report.

4. Upon removal of biosolids, the Discharger shall submit characterization of biosolids quality, including biosolids percent solids and quantitative results of chemical analysis for the priority pollutants listed in 40 CFR 122 Appendix D, Tables II and III (excluding total phenols). Suggested methods for analysis of biosolids are provided in USEPA publications titled "Test Methods for Evaluating Solid Waste: Physical/Chemical Methods" and "Test Methods for Organic Chemical Analysis of Municipal and Industrial Wastewater". Recommended analytical holding times for biosolids samples should reflect those specified in 40 CFR 136.6.3(e). Other guidance is available in USEPA's POTW Sludge Sampling and Analysis Guidance Document, August 1989.

B. Municipal Water Supply

1. Monitoring Location SPL-001

The Discharger shall monitor the Municipal Water Supply at SPL-001 annually for the first three years of the permit, and as is required by the Department of Public Health sampling requirements for domestic water sources for the constituents listed in Table E-8 thereafter. Sampling stations shall be established where representative samples of each municipal water supply source can be obtained.

Table E-8. Municipal Water Supply Monitoring Requirements

Parameter	Units	Sample Type	Minimum Sampling Frequency	Required Analytical Test Method
Total Dissolved Solids[1]	mg/L	Grab	Annually for the first three years and consistent with DPH Requirements thereafter.	[3]
Electrical Conductivity @ 25°C[1]	µmhos/cm	Grab	Annually for the first three years and consistent with DPH Requirements thereafter.	[3]
Standard Minerals[2]	mg/L	Grab	Annually for the first three years and consistent with DPH Requirements thereafter.	[3]

[1] If the water supply is from more than one source, the EC and TDS shall be reported as a flow-weighted average and include copies of supporting calculations.
[2] Standard minerals shall include all major cations and anions and include verification that the analysis is complete (i.e., cation/anion balance).
[3] Samples shall by analyzed using USEPA-approved methods, Standard Methods, or ASTM methods. Any other proposed methods are subject to Executive Officer approval.

C. Monitoring Location INT-001

1. The Discharger shall monitor effluent at INT-001 as follows:

Table E-9. Turbidity Monitoring Requirements

Parameter	Units	Sample Type	Minimum Sampling Frequency	Required Analytical Test Method
Turbidity	NTU	Meter	Continuous	[1]

[1] Samples shall be analyzed using the methods and procedures described in 40 CFR 136.

X. REPORTING REQUIREMENTS

A. General Monitoring and Reporting Requirements

1. The Discharger shall comply with all Standard Provisions (Attachment D) related to monitoring, reporting, and recordkeeping.

2. Upon written request of the Regional Water Board, the Discharger shall submit a summary monitoring report. The report shall contain both tabular and graphical summaries of the monitoring data obtained during the previous year(s).

3. **Compliance Time Schedules.** For compliance time schedules included in the Order, the Discharger shall submit to the Regional Water Board, on or before each compliance due date, the specified document or a written report detailing compliance or noncompliance with the specific date and task. If noncompliance is reported, the Discharger shall state the reasons for noncompliance and include an estimate of the date when the Discharger will be in compliance. The Discharger shall notify the Regional Water Board by letter when it returns to compliance with the compliance time schedule.

4. The Discharger shall report to the Regional Water Board any toxic chemical release data it reports to the State Emergency Response Commission within 15 days of reporting the data to the Commission pursuant to section 313 of the "Emergency Planning and Community Right to Know Act of 1986."

5. **Reporting Protocols.** The Discharger shall report with each sample result the applicable Reporting Level (RL) and the current Method Detection Limit (MDL), as determined by the procedure in Part 136.

   The Discharger shall report the results of analytical determinations for the presence of chemical constituents in a sample using the following reporting protocols:

   a. Sample results greater than or equal to the RL shall be reported as measured by the laboratory (i.e., the measured chemical concentration in the sample).

   b. Sample results less than the RL, but greater than or equal to the laboratory's MDL, shall be reported as "Detected, but Not Quantified," or DNQ. The estimated chemical concentration of the sample shall also be reported.

For the purposes of data collection, the laboratory shall write the estimated chemical concentration next to DNQ as well as the words "Estimated Concentration" (may be shortened to "Est. Conc."). The laboratory may, if such information is available, include numerical estimates of the data quality for the reported result. Numerical estimates of data quality may be percent accuracy (± a percentage of the reported value), numerical ranges (low to high), or any other means considered appropriate by the laboratory.

c. Sample results less than the laboratory's MDL shall be reported as "Not Detected," or ND.

d. Dischargers are to instruct laboratories to establish calibration standards so that the ML value (or its equivalent if there is differential treatment of samples relative to calibration standards) is the lowest calibration standard. At no time is the Discharger to use analytical data derived from *extrapolation* beyond the lowest point of the calibration curve.

6. **Multiple Sample Data.** When determining compliance with an AMEL , AWEL, or MDEL for priority pollutants and more than one sample result is available, the Discharger shall compute the arithmetic mean unless the data set contains one or more reported determinations of "Detected, but Not Quantified" (DNQ) or "Not Detected" (ND). In those cases, the Discharger shall compute the median in place of the arithmetic mean in accordance with the following procedure:

   a. The data set shall be ranked from low to high, ranking the reported ND determinations lowest, DNQ determinations next, followed by quantified values (if any). The order of the individual ND or DNQ determinations is unimportant.

   b. The median value of the data set shall be determined. If the data set has an odd number of data points, then the median is the middle value. If the data set has an even number of data points, then the median is the average of the two values around the middle unless one or both of the points are ND or DNQ, in which case the median value shall be the lower of the two data points where DNQ is lower than a value and ND is lower than DNQ.

B. Self Monitoring Reports (SMRs)

1. At any time during the term of this permit, the State or Regional Water Board may notify the Discharger to electronically submit Self-Monitoring Reports (SMRs) using the State Water Board's California Integrated Water Quality System (CIWQS) Program Web site (http://www.waterboards.ca.gov/ciwqs/index.html). Until such notification is given, the Discharger shall submit hard copy SMRs. The CIWQS Web site will provide additional directions for SMR submittal in the event there will be service interruption for electronic submittal.

2. In reporting the monitoring data, the Discharger shall arrange the data in tabular form so that the date, the constituents, and the concentrations are readily discernible. The data shall be summarized in such a manner to illustrate clearly whether the discharge complies with waste discharge requirements. The highest

daily maximum for the month, monthly and weekly averages, and medians, and removal efficiencies (%) for BOD and Total Suspended Solids, shall be determined and recorded as needed to demonstrate compliance.

3. With the exception of flow, all constituents monitored on a continuous basis (metered) shall be reported as daily maximums, daily minimums, and daily averages; flow shall be reported as the total volume discharged per day for each day of discharge.

4. If the Discharger monitors any pollutant at the locations designated herein more frequently than is required by this Order, the results of such monitoring shall be included in the calculation and reporting of the values required in the discharge monitoring report form. Such increased frequency shall be indicated on the discharge monitoring report form.

5. A letter transmitting the self-monitoring reports shall accompany each report. Such a letter shall include a discussion of requirement violations found during the reporting period, and actions taken or planned for correcting noted violations, such as operation or facility modifications. If the Discharger has previously submitted a report describing corrective actions and/or a time schedule for implementing the corrective actions, reference to the previous correspondence will be satisfactory. The transmittal letter shall contain the penalty of perjury statement by the Discharger, or the Discharger's authorized agent, as described in the Standard Provisions.

6. In addition to the signatory requirements of Standard Provisions (Attachment D), all monitoring reports shall be signed: by the chief operator of the ST/WRF and, if the chief operator of the ST/WRF is not in direct line of supervision of the laboratory function for a discharger conducting any of its own analyses, also by the chief of the laboratory.

7. SMRs must be submitted to the Regional Water Board, signed and certified as required by the Standard Provisions (Attachment D), to the address listed below:

   Regional Water Quality Control Board
   Central Valley Region
   1685 ”E” Street
   Fresno, CA 93706

8. Monitoring periods and reporting for all required monitoring shall be completed according to the following schedule:

Table E-10. Monitoring Periods and Reporting Schedule

Sampling Frequency	Monitoring Period Begins On…	Monitoring Period	SMR Due Date
Continuous	Day after the ST/WRF becomes operational	All	First day of second calendar month following month of sampling
1/day	Day after the ST/WRF becomes operational	Midnight through 11:59 PM or any 24-hour period that reasonably represents a calendar day for purposes of sampling.	First day of second calendar month following month of sampling
1/week 3/week 5/week	Sunday following day after the ST/WRF becomes operational	Sunday through Saturday except as footnoted in the MRP.	First day of second calendar month following month of sampling
1/month	First day of calendar month following day after the ST/WRF becomes operational	1st day of calendar month through last day of calendar month	First day of second calendar month following month of sampling
1/quarter	Closest of January 1, April 1, July 1, or October 1 following (or on) day after the ST/WRF becomes operational	January 1 through March 31 April 1 through June 30 July 1 through September 30 October 1 through December 31	May 1 August 1 November 1 February 1
1/semi-annual	Closest of January 1 or July 1 following (or on) day after the ST/WRF becomes operational permit	January 1 through June 30 July 1 through December 31	August 1 February 1
1/year 2/year	January 1 following (or on) day after the ST/WRF becomes operational	January 1 through December 31	February 1

C. Discharge Monitoring Reports (DMRs)

1. As described in Section X.B.1 above, at any time during the term of this permit, the State or Regional Water Board may notify the Discharger to electronically submit SMRs that will satisfy federal requirements for submittal of Discharge Monitoring Reports (DMRs). Until such notification is given, the Discharger shall submit DMRs in accordance with the requirements described below.

2. DMRs must be signed and certified as required by the Standard Provisions (Attachment D). The Discharger shall submit the original DMR and one copy of the DMR to the address listed below:

STANDARD MAIL	FEDEX/UPS/ OTHER PRIVATE CARRIERS
State Water Resources Control Board Division of Water Quality c/o DMR Processing Center PO Box 100 Sacramento, CA 95812-1000	State Water Resources Control Board Division of Water Quality c/o DMR Processing Center 1001 I Street, 15th Floor Sacramento, CA 95814

3. All discharge monitoring results must be reported on the official USEPA pre-printed DMR forms (USEPA Form 3320-1). Forms that are self-generated cannot be accepted unless they follow the exact same format as USEPA form 3320-1.

D. Other Reports

1. Within **60 days** of ST/WRF operation, the Discharger shall submit a report outlining minimum levels, method detection limits, and analytical methods for approval, with a goal to achieve detection levels below applicable water quality criteria. At a minimum, the Discharger shall comply with the monitoring requirements for CTR constituents as outlined in Section 2.3 and 2.4 of the *Policy for Implementation of Toxics Standards for Inland Surface Waters, Enclosed Bays, and Estuaries of California*, adopted 2 March 2000 by the State Water Resources Control Board. All peaks identified by analytical methods shall be reported.

2. **Annual Operations Report**. By **30 January** of each year, the Discharger shall submit a written report to the Executive Officer containing the following:

   a. The names, certificate grades, and general responsibilities of all persons employed at the ST/WRF.

   b. The names and telephone numbers of persons to contact regarding the plant for emergency and routine situations.

   c. A statement certifying when the flow meter(s) and other monitoring instruments and devices were last calibrated, including identification of who performed the calibration.

   d. A statement certifying whether the current operation and maintenance manual, and contingency plan, reflect the wastewater treatment plant as currently constructed and operated, and the dates when these documents were last revised and last reviewed for adequacy.

   e. The Discharger may also be requested to submit an annual report to the Regional Water Board with both tabular and graphical summaries of the monitoring data obtained during the previous year. Any such request shall be made in writing. The report shall discuss the compliance record. If violations have occurred, the report shall also discuss the corrective actions taken and planned to bring the discharge into full compliance with the waste discharge requirements.

3. **Annual Pretreatment Reporting Requirements.** The Discharger shall submit annually (1/year) a report to the Regional Water Board, with copies to USEPA Region 9 and the State Water Board, describing the Discharger's pretreatment activities over the previous 12 months. An annual pretreatment report prepared by the City of Fresno that includes the information required below satisfies this reporting requirement. In the event that the Discharger is not in compliance with any

conditions or requirements of this Order, including noncompliance with pretreatment audit/compliance inspection requirements, then the Discharger shall also include the reasons for noncompliance and state how and when the Discharger shall comply with such conditions and requirements.

An annual report shall be submitted by **28 February** and include at least the following items:

a. A summary of analytical results from representative, flow proportioned, 24-hour composite sampling of the POTW's influent and effluent for those pollutants USEPA has identified under Section 307(a) of the CWA which are known or suspected to be discharged by industrial users.

   Sludge shall be sampled during the same 24-hour period and analyzed for the same pollutants as the influent and effluent sampling and analysis. The sludge analyzed shall be a composite sample of a minimum of 12 discrete samples taken at equal time intervals over the 24-hour period. Wastewater and sludge sampling and analysis shall be performed at least annually. The Discharger shall also provide any influent, effluent or sludge monitoring data for nonpriority pollutants which may be causing or contributing to Interference, Pass-Through or adversely impacting sludge quality. Sampling and analysis shall be performed in accordance with the techniques prescribed in 40 CFR 136 and amendments thereto.

b. A discussion of Upset, Interference, or Pass-Through incidents, if any, at the treatment plant, which the Discharger knows or suspects were caused by industrial users of the POTW. The discussion shall include the reasons why the incidents occurred, the corrective actions taken and, if known, the name and address of, the industrial user(s) responsible. The discussion shall also include a review of the applicable pollutant limitations to determine whether any additional limitations, or changes to existing requirements, may be necessary to prevent Pass-Through, Interference, or noncompliance with sludge disposal requirements.

c. The cumulative number of industrial users that the Discharger has notified regarding Baseline Monitoring Reports and the cumulative number of industrial user responses.

d. An updated list of the Discharger's industrial users including their names and addresses, or a list of deletions and additions keyed to a previously submitted list. The Discharger shall provide a brief explanation for each deletion. The list shall identify the industrial users subject to federal categorical standards by specifying which set(s) of standards are applicable. The list shall indicate which categorical industries, or specific pollutants from each industry, are subject to local limitations that are more stringent than the federal categorical standards. The Discharger shall also list the noncategorical industrial users that are subject only to local discharge limitations. The Discharger shall characterize the

compliance status through the year of record of each industrial user by employing the following descriptions:

i. complied with baseline monitoring report requirements (where applicable);
ii. consistently achieved compliance;
iii. inconsistently achieved compliance;
iv. significantly violated applicable pretreatment requirements as defined by 40 CFR 403.8(f)(2)(vii);
v. complied with schedule to achieve compliance (include the date final compliance is required);
vi. did not achieve compliance and not on a compliance schedule; and
vii. compliance status unknown.

A report describing the compliance status of each industrial user characterized by the descriptions in items iii. through vii. above shall be submitted for each calendar quarter **within 21 days of the end of the quarter**. The report shall identify the specific compliance status of each such industrial user and shall also identify the compliance status of the POTW with regards to audit/pretreatment compliance inspection requirements. If none of the aforementioned conditions exist, at a minimum, a letter indicating that all industries are in compliance and no violations or changes to the pretreatment program have occurred during the quarter must be submitted. The information required in the fourth quarter report shall be included as part of the annual report. This quarterly reporting requirement shall commence upon operation of the ST/WRF.

e. A summary of the inspection and sampling activities conducted by the Discharger during the past year to gather information and data regarding the industrial users. The summary shall include:

i. the names and addresses of the industrial users subjected to surveillance and an explanation of whether they were inspected, sampled, or both and the frequency of these activities at each user; and
ii. the conclusions or results from the inspection or sampling of each industrial user.

f. A summary of the compliance and enforcement activities during the past year. The summary shall include the names and addresses of the industrial users affected by the following actions:

i. Warning letters or notices of violation regarding the industrial users' apparent noncompliance with federal categorical standards or local discharge limitations. For each industrial user, identify whether the apparent violation concerned the federal categorical standards or local discharge limitations.
ii. Administrative orders regarding the industrial users noncompliance with federal categorical standards or local discharge limitations. For each industrial

user, identify whether the violation concerned the federal categorical standards or local discharge limitations.

iii. Civil actions regarding the industrial users' noncompliance with federal categorical standards or local discharge limitations. For each industrial user, identify whether the violation concerned the federal categorical standards or local discharge limitations.

iv. Criminal actions regarding the industrial users noncompliance with federal categorical standards or local discharge limitations. For each industrial user, identify whether the violation concerned the federal categorical standards or local discharge limitations.

v. Assessment of monetary penalties. For each industrial user identify the amount of the penalties.

vi. Restriction of flow to the POTW.

vii. Disconnection from discharge to the POTW.

viii. A summary of public participation activities to involve and inform the public.

ix. A description of any changes in biosolids disposal methods and a discussion of any concerns not described elsewhere in the report.

g. A description of any significant changes in operating the pretreatment program which differ from the information in the City of Fresno's approved Pretreatment Program including, but not limited to, changes concerning: the program's administrative structure, local industrial discharge limitations, monitoring program or monitoring frequencies, legal authority or enforcement policy, funding mechanisms, resource requirements, or staffing levels.

h. A summary of the annual pretreatment budget, including the cost of pretreatment program functions and equipment purchases.

Duplicate signed copies of these Pretreatment Program reports shall be submitted to the Regional Water Board and the:

State Water Resources Control Board
Division of Water Quality
P.O. Box 944213
Sacramento, CA 94244-2130

and the

Regional Administrator
U.S. Environmental Protection Agency W-5
75 Hawthorne Street
San Francisco, CA 94105

ATTACHMENT F – FACT SHEET

Table of Contents

Attachment F – Fact Sheet F-1
I. Permit Information F-1
II. Facility Description F-2
A. Description of Wastewater and Solids Treatment or Controls F-3
B. Discharge Points and Receiving Waters F-3
C. Summary of Existing Requirements/SMR Data – Not Applicable F-4
D. Compliance Summary – Not Applicable F-4
E. Planned Changes F-4
III. Applicable Plans, Policies, and Regulations F-4
A. Legal Authority F-5
B. California Environmental Quality Act (CEQA) F-5
C. State and Federal Regulations, Policies, and Plans F-5
D. Impaired Water Bodies on CWA 303(d) List F-10
E. Other Plans, Polices and Regulations F-11
IV. Rationale For Effluent Limitations and Discharge Specifications F-11
A. Discharge Prohibitions F-12
B. Technology-Based Effluent Limitations F-13
1. Scope and Authority F-13
2. Applicable Technology-Based Effluent Limitations F-14
C. Water Quality-Based Effluent Limitations (WQBELs) F-16
1. Scope and Authority F-16
2. Applicable Beneficial Uses and Water Quality Criteria and Objectives F-16
3. Determining the Need for WQBELs F-17
4. Whole Effluent Toxicity (WET) F-25
D. Final Effluent Limitations F-26
1. Mass-based Effluent Limitations. F-26
2. Averaging Periods for Effluent Limitations. F-26
3. Satisfaction of Anti-Backsliding Requirements. – Not Applicable F-27
4. Satisfaction of Antidegradation Policy F-27
E. Interim Effluent Limitations - Not Applicable F-35
F. Land Discharge Specifications - Not Applicable F-35
G. Reclamation Specifications F-35
H. Flow Specifications F-37
V. Rationale for Receiving Water Limitations F-37
A. Surface Water F-37
B. Groundwater F-41
VI. Rationale for Monitoring and Reporting Requirements F-41
A. Influent Monitoring F-41
B. Effluent Monitoring F-42
C. Whole Effluent Toxicity Testing Requirements F-42
D. Receiving Water Monitoring F-42
1. Surface Water F-42
2. Reclamation Monitoring Requirements F-42

E. Other Monitoring Requirements F-42
VII. Rationale for Provisions F-43
A. Standard Provisions F-43
B. Special Provisions F-43
1. Reopener Provisions F-43
2. Special Studies and Additional Monitoring Requirements F-44
3. Best Management Practices and Pollution Prevention F-48
4. Construction, Operation, and Maintenance Specifications F-48
5. Special Provisions for Municipal Facilities (POTWs Only) F-49
6. Other Special Provisions F-50
7. Compliance Schedules – Not applicable F-50
8. Master Reclamation Permit Provisions F-51
VIII. Public Participation F-51
A. Notification of Interested Parties F-51
B. Written Comments F-51
C. Public Hearing F-51
D. Waste Discharge Requirements Petitions F-52
E. Information and Copying F-52
F. Register of Interested Persons F-52
G. Additional Information F-52

List of Tables

Table F-1. Facility Information F-1
Table F-2. Summary of Technology-based Effluent Limitations F-15
Table F-3. Salinity Water Quality Criteria/Objectives F-22
Table F-4. Summary of Water Quality-based Effluent Limitations F-25
Table F-5. Diversion Channel and Fancher Creek Assessment Results F-28
Table F-6. Little Dry Creek Assessment Results F-30

ATTACHMENT F – FACT SHEET

As described in section II of this Order, this Fact Sheet includes the legal requirements and technical rationale that serve as the basis for the requirements of this Order.

This Order has been prepared under a standardized format to accommodate a broad range of discharge requirements for dischargers in California. Only those sections or subsections of this Order that are specifically identified as "not applicable" have been determined not to apply to this Discharger. Sections or subsections of this Order not specifically identified as "not applicable" are fully applicable to this Discharger.

I. PERMIT INFORMATION

The following table summarizes administrative information related to the facility.

Table F-1. Facility Information

WDID	5C10NP00012
Discharger	City of Clovis
Name of Facility	Clovis Sewage Treatment/Water Reuse Facility (ST/WRF)
Facility Address	9700 East Ashlan Avenue
	Clovis, CA 93619
	Fresno County
Facility Contact, Title and Phone	Ms. Lisa Koehn, Assistant Public Utilities Director, 559-324-2607
Authorized Person to Sign and Submit Reports	Ms. Lisa Koehn, Assistant Public Utilities Director, 559-324-2607
Mailing Address	City of Clovis, 155 N. Sunnyside Avenue, Clovis, CA 93611
Billing Address	City of Clovis, 155 N. Sunnyside Avenue, Clovis, CA 93611
Type of Facility	POTW
Major or Minor Facility	Major
Threat to Water Quality	2
Complexity	B
Pretreatment Program	Y
Reclamation Requirements	Producer and User
Facility Permitted Flow	Phase I - 2.8 MGD / Phase II - 5.6 MGD (Average Annual) Phase I – 3.1 MGD / Phase II – 6.2 MGD (Average Monthly)
Facility Design Flow	Same as Facility Permitted Flow
Watershed	Fresno Hydrologic Area (551.30) and Berenda Creek Hydrologic Area (545.30)
Receiving Water	Fancher Creek and the Diversion Channel from Big Dry Creek Reservoir to Little Dry Creek / Groundwater in Detailed Analysis Unit #233 and #234 of the Kings Basin
Receiving Water Type	Inland Surface waters / Groundwater

A. City of Clovis (hereinafter Discharger or City) is the owner of the Clovis Sewage Treatment and Water Reuse Facility (hereinafter ST/WRF), a domestic wastewater tertiary treatment facility and a publicly owned treatment works (POTW). The Discharger has contracted with CH2M Hill to design, build and operate the ST/WRF. The ST/WRF and the sewer collection system are hereinafter referred to as "Facility."

For the purposes of this Order, references to the "discharger" or "permittee" in applicable federal and state laws, regulations, plans, or policy are held to be equivalent to references to the Discharger herein.

B. The Facility will produce recycled water for distribution to reuse sites. Excess recycled water will be discharged to the Diversion Channel from Big Dry Creek Reservoir to Little Dry Creek (hereinafter Diversion Channel) and/or, under an agreement with the Fresno Irrigation District (FID), Fancher Creek. The Diversion Channel and Fancher Creek are waters of the United States.

C. The Discharger filed a report of waste discharge and submitted an application for its Waste Discharge Requirements (WDRs) and National Pollutant Discharge Elimination System (NPDES) permit on 24 November 2004. The application was deemed complete by the Regional Water Board on 21 December 2004. On 6 April 2005, the Regional Water Board requested, pursuant to Section 13267 of the California Water Code (CWC), that the Discharger submit monitoring data to implement the State Water Resources Control Board's (State Water Board) *Policy for Implementation of Toxics Standards for Inland Surface Waters, Enclosed Bays, and Estuaries of California* (State Implementation Policy or SIP). The requested monitoring data was submitted to the Regional Water Board on 1 July 2005 and 1 November 2006.

II. FACILITY DESCRIPTION

The Discharger provides sewerage service for the community of City of Clovis and serves a population of 89,924. The ST/WRF design average annual flow capacity is 2.8 MGD for Phase I and 5.6 MGD for Phase II. The Discharger's sewage is currently conveyed to the Fresno-Clovis Regional Wastewater Treatment Facility, a secondary wastewater treatment facility in southwest Fresno approximately 19 miles from the City of Clovis' city center. The Fresno-Clovis Regional Wastewater Treatment Facility will continue to receive and treat sewage from the City. For the Discharger to service the growth and housing needs projected in the Discharger's General Plan Housing Element Update (2002), significant additional sewer capacity will be needed. Growth is projected in particular for the northwest, northeast, and southeast areas of the City, and it is these areas that will be primarily served by the ST/WRF. The current practice of temporary "exchange" of sewer trunk capacity with the City of Fresno will only allow for limited, short-term service expansion that is insufficient to meet the Discharger's long-term needs.

The Discharger completed an Environmental Impact Report (EIR) for full build-out of 8.4 MGD ST/WRF, its recycled water distribution system, and proposed outfalls to Fancher Creek and the Diversion Channel. The Discharger has also prepared a Recycled Water Master Plan as well as a Title 22 engineering report for the Production, Distribution and

Use of Recycled Water. The Discharger intends to maximize its use of recycled water over time. Tertiary treated effluent that is to be used as recycled water will be pumped to the Discharger's recycled water distribution system for recycled water use. Recycled water uses will be subject to the Master Reclamation Permit provisions contain in the Order.

A. Description of Wastewater and Solids Treatment or Controls

The treatment system at the ST/WRF consists of headworks with screens, a cyclone to remove grit and settleable materials (acting as primary treatment); an anaerobic and aerobic treatment tank (acting as secondary treatment); and membrane filtration units (acting as tertiary treatment). The disinfected tertiary treated effluent will be disinfected with ultraviolet radiation. Odor will be captured through the process and recycled into the aerobic treatment tank or into the final biological odor treatment beds. The tertiary treated effluent produced at the ST/WRF will be stored in bolted-steel tanks for use as recycled water or for discharge to one of the two surface water locations. Solids will pass through the Cannibal™ Solids Reduction Process. The patented Cannibal™ process reduces the solids in the secondary treatment system by holding RAS in the interchange tanks for approximately 10 days under specific environmental conditions that work to break down the solids. A single solids holding tank/aerobic digester will be used to handle the occasional purge of solids needed by the Cannibal™ process. Class B solids from the digester will be intermittently discharged through a submersible pump to a sludge filtration dewatering box located at the headworks. Dewatered biosolids will be hauled offsite for disposal at a Class B Solids Disposal Facility or for further treatment at a composting facility.

B. Discharge Points and Receiving Waters

1. The ST/WRF is located in Section 18, T13S, R22E, MDB&M, as shown in Attachment B (Figure B-1), a part of this Order.

2. Treated municipal wastewater will be discharged at Discharge Point 001 to Fancher Creek, a water of the United States, at a point Latitude 36° 45' 39" N and longitude 119° 37'40.4" W. Treated municipal wastewater may also be discharged at Discharge Point 002 to the Diversion Channel at a point Latitude 36° 53' 24" N and longitude 119° 39'56.3" W. Little Dry Creek is an ephemeral tributary of the San Joaquin River, a water of the United States.

3. Fancher Creek, at Discharge Point 001, is a modified natural creek (i.e., canal) used and managed by FID to deliver irrigation water to approximately 32,600 acres of irrigated agriculture. The irrigation water originates from the Kings River and is diverted into the Fresno No. 3 Canal, which splits into Mill Ditch and Fancher Creek immediately upstream of Discharge Point 001. The irrigation season typically starts in March and ends in September/October. From 1996 to 2006, FID delivered an average of 127,557 acre-feet per year (AF/year)(range: 92,626 - 232,201 AF/year) from the Fresno No. 3 Canal into the Fancher Creek system. During the non-irrigation season, flow in Fancher Creek is limited to storm water and Kings River

fish passage flows that are partially routed through Fancher Creek. At times, flow in Fancher Creek is immeasurably small or nonexistent. Therefore, ST/WRF discharges to Discharge Point 001 are expected to provide the majority of the flow in Fancher Creek, at times, during the winter months.

4. The Diversion Channel is a man-made, unlined channel constructed to convey flood flows from the Big Dry Creek Reservoir to Little Dry Creek and is operated and maintained by the Fresno Metropolitan Flood Control District. The approximately 4.5 mile Diversion Channel predominantly traverses rural residential areas and areas of non-irrigated native vegetation. Discharge Point 002 is just below the Big Dry Creek Reservoir outlet structure. Records show that flows are not necessarily diverted through the Diversion Channel every year, and when they do occur, they are during the winter and spring months. Discharges to Discharge Point 002 will often provide the majority of the flow in the Diversion Channel, with little or no dilution from natural flow. The Diversion Channel remains dry the majority of the time. The Discharger proposes to discharge to the Diversion Channel only when it is unable to discharge to Fancher Creek (e.g., as when FID is conducting maintenance activities).

5. The Diversion Channel empties into Little Dry Creek, an ephemeral watercourse. The 2-2.5 mile stretch of Little Dry Creek between its confluence with the Diversion Channel and its confluence with the San Joaquin River lies within a rural, undeveloped area that is surrounded by native vegetation. Little Dry Creek is not managed to provide irrigation supply, as the flow timing and magnitude are not predictable. Much of the land surrounding Little Dry Creek is used for cattle grazing with cattle having access to riparian areas.

C. Summary of Existing Requirements/SMR Data – Not Applicable

Not applicable. This is a new discharge.

D. Compliance Summary – Not Applicable

Not applicable. This is a new discharge

E. Planned Changes

The Discharger intends to build the ST/WRF in three phases. This permit addresses discharge limitations associated with Phases I and II, at the Discharger's request. At the end of Phase II, the ST/WRF will have a design flow of 5.6 MGD (Average Annual).

III. APPLICABLE PLANS, POLICIES, AND REGULATIONS

The requirements contained in this Order are based on the applicable plans, policies, and regulations identified in section II of the Limitations and Discharge Requirements (Findings). This section provides supplemental information, where appropriate, for the plans, policies, and regulations relevant to the discharge.

A. Legal Authority

See Limitations and Discharge Requirements - Findings, Section II.C.

B. California Environmental Quality Act (CEQA)

The City of Clovis certified a final environmental impact report (EIR) for the ST/WRF in accordance with CEQA (Public Resources Code section 21000, et seq.) on July 18, 2005. Evaluation of the potential impacts on water quality from the ST/WRF confirms the project as proposed includes features that will avoid significant impacts on water quality, except for the potential for discharging additional pollutants entrained in storm water runoff, the potential accidental release of hazardous substances to storm drains, and unavoidable exceedance of unspecified criteria established by the NTR and CTR. In regards to storm water runoff and the accidental release of hazardous substances, the City altered the project to include storm water best management practices (BMPs) and preparation of a spill prevention plan as mitigation measures. However, the City determined an exceedance of CTR criteria unavoidable with no feasible mitigation. In accordance with Title 14, CCR, Section 15093, the City adopted a statement of overriding considerations on July 18, 2005 citing specific social, environmental, and economic benefits that outweigh the significant and unavoidable water quality impact.

The alteration of the project will mitigate or avoid the adverse environmental impact on water quality from storm water runoff and hazardous substances. Evaluation of the proposed discharge from the ST/WRF against CTR criteria (see Fact Sheet, Section IV.D.4.a.) indicates potential exceedance of CTR criteria to be improbable. Further, as established procedures exist to address such exceedances if they do occur, it is premature to declare mitigation infeasible. This Order contains provisions for determining where there is reasonable potential for exceedance. In the unlikely event reasonable potential is established, this Order contains a reopener provision to include effluent limitations for the subject constituent(s).

As the responsible agency for water quality in the Central Valley under CEQA, Regional Water Board independent review determines the project as altered and approved by the City will not have a significant effect on water quality. This Order imposes enforceable requirements, including monitoring of effluent quality and receiving waters, to ensure this is the case.

C. State and Federal Regulations, Policies, and Plans

1. **Water Quality Control Plans**. The Regional Water Board adopted a *Water Quality Control Plan for the Sacramento and San Joaquin River Basins, Fourth Edition (revised October 2007)* (hereinafter Sacramento-San Joaquin Rivers Basin Plan) and a *Water Quality Control Plan for the Tulare Lake Basin, Second Edition (revised January 2004)* (hereinafter Tulare Lake Basin Plan) (collectively hereinafter Basin Plans) that designate beneficial uses, establish water quality objectives, and contain implementation programs and policies to achieve those objectives for all waters addressed through the Basin Plans. Based on State Water Board Resolution No. 88-63, the Basin Plans specify that water bodies without beneficial uses listed in the Basin Plans are all designated as having the use of MUN.

The Sacramento-San Joaquin Rivers Basin Plan on page II-1.00 states: "*Protection and enhancement of existing and potential beneficial uses are primary goals of water quality planning…*" and with respect to disposal of wastewaters states that "*...disposal of wastewaters is [not] a prohibited use of waters of the State; it is merely a use which cannot be satisfied to the detriment of beneficial uses.*" The Tulare Lake Basin Plan on page II-1 states: *"Protection and enhancement of beneficial uses of water against quality degradation is a basic requirement of water quality planning under the Porter-Cologne Water Quality Control Act. In setting water quality objectives, the Regional Water Board must consider past, present, and probable future beneficial uses of water."* and with respect to disposal of wastewaters states that "*...use of waters for disposal of wastewaters is not included as a beneficial use…and are subject to regulation as activities that may harm protected uses."*

The federal Clean Water Act (CWA) section 101(a)(2), states: "*it is the national goal that wherever attainable, an interim goal of water quality which provides for the protection and propagation of fish, shellfish, and wildlife, and for recreation in and on the water be achieved by July 1, 1983.*" Federal Regulations, developed to implement the requirements of the CWA, create a rebuttable presumption that all waters be designated as fishable and swimmable. Title 40, Code of Federal Regulations (CFR), sections 131.2 and 131.10, require that all waters of the State be regulated to protect the beneficial uses of public water supply, protection and propagation of fish, shell fish and wildlife, recreation in and on the water, agricultural, industrial and other purposes including navigation. 40 CFR section 131.3(e) defines existing beneficial uses as those uses actually attained after November 28, 1975, whether or not they are included in the water quality standards. Federal Regulation, 40 CFR section 131.10, requires that uses be obtained by implementing effluent limitations, requires that all downstream uses be protected and states that in no case shall a state adopt waste transport or waste assimilation as a beneficial use for any waters of the United States.

The designated beneficial uses of Fancher Creek, a Valley Floor Water, include agricultural supply, including stock watering; industrial process supply; industrial service supply; water contact recreation; non-contact water recreation; warm freshwater habitat; wildlife habitat; rare, threatened, or endangered species; and groundwater recharge.

As previously described, the Diversion Channel drains to Little Dry Creek, which is tributary to the San Joaquin River. Discharges to the frequently dry Diversion Channel must be protective of the Little Dry Creek's beneficial uses. In accordance with the tributary rule, the beneficial uses of Little Dry Creek are municipal and domestic supply; agricultural irrigation, including stock watering; industrial process supply; water contact recreation; non-contact water recreation; warm freshwater habitat; cold freshwater habitat; warm and cold fish migration habitat; warm spawning habitat; and wildlife habitat.

Designated beneficial uses are not specifically listed in the Basin Plans for the

Diversion Channel. As the Diversion Channel is a constructed conveyance, it is not a Valley Floor Water, nor can its uses be determined by the tributary rule. The Diversion Channel serves to divert natural water from Big Dry Creek, a Valley Floor Water with designated beneficial uses, to Little Dry Creek, a natural watercourse with beneficial uses by tributary rule. It is reasonable to apply the beneficial uses of the Diversion Channel's source water (i.e., Big Dry Creek) to the Diversion Channel. These uses include agricultural supply, including stock watering; industrial process supply; industrial service supply; water contact recreation; non-contact water recreation; warm freshwater habitat; wildlife habitat; rare, threatened, or endangered species; and groundwater recharge. To the extent the effects of the ST/WRF discharge reach Little Dry Creek, the additional beneficial uses that apply to Little Dry Creek must be protected.

The Tulare Lake Basin Plan also designates beneficial uses for the groundwater underlying Discharge Points 001, 002, and REC-001. Groundwater underlying these points is in Detailed Analysis Units (DAU) #233 and #234 of the Kings Basin. The beneficial uses of groundwater in DAU #233 are: municipal and domestic supply; agricultural supply; industrial service supply; industrial process supply; water contact and non-contact water recreation. The designated beneficial uses of groundwater in DAU #234 are: municipal and domestic supply; agricultural supply; and industrial service supply.

This Order contains Effluent Limitations requiring a disinfected tertiary level of treatment, or equivalent, which is necessary to protect the beneficial uses of the receiving waters. The Regional Water Board has considered the factors listed in CWC Section 13241 in establishing these requirements, as described in more detail in the Fact Sheet.

2. **Water Reuse Policy and Master Reclamation Permits**. The Tulare Lake Basin Plan states that *"Dischargers will be required to reclaim and reuse wastewater whenever reclamation is feasible."* (Tulare Lake Basin Plan at IV-8.) It also states *"Discharges to surface water and evaporation of reclaimable wastewater will not be acceptable permanent disposal methods where opportunity exists to replace an existing use or proposed use of freshwater with reclaimed water; a timetable for reclamation or reuse may be set by the Regional Water Board."* (Tulare Lake Basin Plan at IV-12.)

   The Discharger will treat wastewater to disinfected tertiary treatment standards and will reclaim and reuse wastewater to the maximum extent feasible as opportunities for use of recycled water become available. With this Order, the Regional Water Board is adopting a Master Reclamation Permit that will allow the Discharger to produce, distribute and use recycled water throughout the City as recycled water opportunities become available.

   Pursuant to CWC Section 13523.1, the Regional Water Board, after consulting with, and receiving the recommendations of, the California Department of Public Health (DPH) and any party who has requested in writing to be consulted, and with the

consent of the Discharger, may issue a master reclamation permit to the Discharger as the recycled water supplier in lieu of issuing individual waste discharge requirements or water reclamation requirements to every recycled water user. As required by CWC Section 13523.1, a master reclamation permit must include, and this Order does include, the following:

- Waste discharge requirements adopted pursuant to article 4, chapter 4, division 7 of the CWC (commencing with section 13260);
- Requirements that the Discharger comply with the uniform statewide criteria established by DPH pursuant to Section 13521 and other applicable permit conditions for the use of recycled water;
- Requirements for the Discharger to establish and enforce rules and regulations for recycled water users in accordance with statewide reclamation criteria;
- Requirements for the submittal of quarterly recycled water use summary reports;
- Requirements for the recycled water agency to conduct periodic inspections of the recycled water use sites; and
- Other requirements determined to be appropriate by the Regional Water Board.

3. **Consolidation of Wastewater Treatment**. The Tulare Lake Basin Plan generally encourages consolidation of wastewater treatment and discourages development of multiple smaller plants for economy of scale and opportunity for “effective reuse” of wastewater. The Discharger’s Report of Waste Discharge (November 23, 2004) evaluated several options related to the need for additional sewer capacity as outlined in the Discharger’s Wastewater Master Plan Update, including the option for expanding the regional collection/treatment system in light of the Tulare Lake Basin Plan’s policy with regard to Consolidation of Wastewater Treatment. Based on the Discharger’s review of the various options, the Discharger concluded that benefits related to decentralized/local wastewater treatment for reuse outweighed the benefits of consolidation. In particular:

   a. The higher level of treatment planned for at the ST/WRF will enable the Discharger to serve more reuse customers then those currently being serviced by the Fresno-Clovis regional facility.

   b. The ST/WRF project will allow the Discharger to reduce the need for expensive regional wastewater collection and treatment upgrades to service the Discharger’s planned growth; and supplements finite fresh water sources in Clovis with recycled water for that growth.

   c. The addition of the ST/WRF will increase the collective reliability of the overall wastewater treatment system for the Fresno-Clovis area.

   d. The ST/WRF will provide denitrified disinfected tertiary recycled water locally at a lower estimated capital and O/M cost than upgrading the existing regional infrastructure to provide secondary wastewater treatment for the same amount of additional wastewater.

e. Typically, and in this case, reuse treatment facilities are best located in the area where the water will be reused. The cost to convey sewage to the Fresno-Clovis regional facility and then bring the treated water for reuse back to the service area would be cost prohibitive.

4. **Antidegradation Policy.** 40 CFR section 131.12 requires that the state water quality standards include an antidegradation policy consistent with the federal policy. The State Water Board established California's antidegradation policy in State Water Board Resolution No. 68-16. Resolution No. 68-16 incorporates the federal antidegradation policy where the federal policy applies under federal law. Resolution No. 68-16 requires that existing water quality be maintained unless degradation is justified based on specific findings. The Basin Plans implement, and incorporate by reference, both the State and federal antidegradation policies. As described in detail later in this Fact Sheet, the discharge is consistent with the antidegradation provisions of 40 CFR section 131.12 and State Water Board Resolution 68-16.

5. **Anti-Backsliding Requirements.** Sections 402(o)(2) and 303(d)(4) of the CWA and federal regulations at 40 CFR section 122.44(l) prohibit backsliding in NPDES permits. Anti-backsliding requirements do not apply to this permit because it is a new NPDES permit for a new discharge to surface water.

6. ***Emergency Planning and Community Right to Know Act***. CWC Section 13263.6(a) requires that "*the Regional Water Board shall prescribe effluent limitations as part of the waste discharge requirements of a POTW for all substances that the most recent toxic chemical release data reported to the state emergency response commission pursuant to Section 313 of the Emergency Planning and Community Right to Know Act of 1986 (42 U.S.C. Sec. 11023) (EPCRKA) indicate as discharged into the POTW, for which the State Water Board or the Regional Water Board has established numeric water quality objectives, and has determined that the discharge is or may be discharged at a level which will cause, have the reasonable potential to cause, or contribute to, an excursion above any numeric water quality objective*". As this is a new discharge, no toxic chemical release data has been reported to the state emergency response commission. Therefore, a reasonable potential analysis based on information from Emergency Planning and Community Right to Know Act (EPCRA) cannot be conducted. Nonetheless, toxic chemicals with numeric criteria established by NTR and CTR have been evaluated for reasonable potential and the necessity to prescribe effluent limitations (see Fact Sheet, Section IV.C.).

7. ***Stormwater Requirements*.** USEPA promulgated Federal Regulations for storm water on 16 November 1990 in 40 CFR parts 122, 123, and 124. The NPDES Industrial Storm Water Program regulates storm water discharges from wastewater treatment facilities. Wastewater treatment plants are applicable industries under the storm water program and are obligated to comply with the Federal Regulations.

8. ***Endangered Species Act.*** This Order does not authorize any act that results in the taking of a threatened or endangered species or any act that is now prohibited, or

becomes prohibited in the future, under either the California Endangered Species Act (Fish and Game Code sections 2050 to 2097) or the Federal Endangered Species Act (16 U.S.C.A. sections 1531 to 1544). This Order requires compliance with effluent limits, receiving water limits, and other requirements to protect the beneficial uses of waters of the state. The Discharger is responsible for meeting all requirements of the applicable Endangered Species Act.

D. Impaired Water Bodies on CWA 303(d) List

1. Under Section 303(d) of the 1972 CWA, states, territories and authorized tribes are required to develop lists of water quality limited segments. The waters on these lists do not meet water quality standards, even after point sources of pollution have installed the minimum required levels of pollution control technology. On June 28, 2007 USEPA gave final approval to California's 2006 Section 303(d) List of Water Quality Limited Segments. The Basin Plans reference this list of Water Quality Limited Segments (WQLSs), which are defined as "…*those sections of lakes, streams, rivers or other fresh water bodies where water quality does not meet (or is not expected to meet) water quality standards even after the application of appropriate limitations for point sources (40 CFR 130, et seq.)*." The Basin Plans also state, "*Additional treatment beyond minimum federal standards will be imposed on dischargers to [WQLSs]. Dischargers will be assigned or allocated a maximum allowable load of critical pollutants so that water quality objectives can be met in the segment.*" The Diversion Channel, Little Dry Creek, and Fancher Creek are not listed as WQLSs in the 303(d) list of impaired water bodies. However, Little Dry Creek is tributary to the San Joaquin River , which is listed as WQLS for exotic species from Friant Dam to Mendota Pool. Segments of the San Joaquin River downstream of the Mendota Pool are listed as a WQLS for boron, chlorpyrifos, diazinon, DDT, Group A Pesticides, electrical conductivity, mercury, and unknown toxicity. This Order includes monitoring requirements for boron, chlorpyrifos, diazinon, DDT, Group A pesticides, mercury, and toxicity. This Order includes effluent limitations for electrical conductivity.

2. **Total Maximum Daily Loads.** The USEPA requires the Regional Water Board to develop total maximum daily loads (TMDLs) for each 303(d) listed pollutant and water body combination. TMDLs on the Lower San Joaquin River have been established for chlorpyrifos, diazinon, boron, and electrical conductivity. These TMDLs do not apply to the segment of the San Joaquin River where Little Dry Creek drains. Regional Water Board staff is working on the second phase of the TMDL, which will propose new salinity and boron objectives for the San Joaquin River upstream of the Airport Way Bridge near Vernalis. A TMDL has not yet been established for mercury. Once the second phase of the Lower San Joaquin River salinity/boron TMDL or the mercury TMDL are established, this Order may be reopened so that the applicable effluent limitations may be added.

E. Other Plans, Polices and Regulations

1. The discharge authorized herein and the treatment and storage facilities associated with the discharge of treated municipal wastewater, except for discharges of residual sludge and solid waste, are exempt from the requirements of Title 27, California Code of Regulations (CCR), section 20005 *et seq*. (hereafter Title 27). The exemption, pursuant to Title 27, CCR, Section 20090(a), is based on the following:

   a. The waste consists primarily of domestic sewage and treated effluent;

   b. The waste discharge requirements are consistent with water quality objectives; and

   c. The treatment and storage facilities described herein are associated with a municipal wastewater treatment plant.

2. This Order contains provisions that implement State law only. These provisions/requirements are not required or authorized by the federal CWA. Thus, violations of these provisions/requirements are not subject to the enforcement remedies that are strictly for NPDES violations. More specifically, the provisions in IV.C. are Reclamation Specifications and the provisions in VI.C.8. are the Master Reclamation Permit provisions of this Order. The Master Reclamation Permit provisions of this Order are adopted pursuant to Section 13523.1, Chapter 7, Article 2 of the CWC, which authorizes the Regional Water Board to issue a Master Reclamation Permit to suppliers or distributors, or both of recycled water in lieu of issuing individual water reclamation requirements to each Recycled Water User.

IV. RATIONALE FOR EFFLUENT LIMITATIONS AND DISCHARGE SPECIFICATIONS

Effluent limitations and toxic and pretreatment effluent standards established pursuant to Sections 301 (Effluent Limitations), 302 (Water Quality Related Effluent Limitations), 304 (Information and Guidelines), and 307 (Toxic and Pretreatment Effluent Standards) of the CWA and amendments thereto are applicable to the discharge.

The federal CWA mandates the implementation of effluent limitations that are as stringent as necessary to meet water quality standards established pursuant to state or federal law [33 U.S.C., § 1311(b)(1)(C); 40 CFR 122.44(d)(1)]. NPDES permits must incorporate discharge limits necessary to ensure that water quality standards are met. This requirement applies to narrative criteria as well as to criteria specifying maximum amounts of particular pollutants. Pursuant to 40 CFR section 122.44(d)(1)(i), NPDES permits must contain limits that control all pollutants that "*are or may be discharged at a level which will cause, have the reasonable potential to cause, or contribute to an excursion above any state water quality standard, including state narrative criteria for water quality*." 40 CFR section 122.44(d)(1)(vi), further provides that "[w]*here a state has not established a water quality criterion for a specific chemical pollutant that is present in an effluent at a concentration that causes, has the reasonable potential to cause, or contributes to an excursion above a narrative criterion within an applicable State water quality standard, the permitting authority must establish effluent limits.*"

The CWA requires point source discharges to control the amount of conventional, non-conventional, and toxic pollutants that are discharged into the waters of the United States. The control of pollutants discharged is established through effluent limitations and other requirements in NPDES permits. There are two principal bases for effluent limitations: 40 CFR section 122.44(a) requires that permits include applicable technology-based limitations and standards, and 40 CFR section 122.44(d) requires that permits include water quality-based effluent limitations to attain and maintain applicable numeric and narrative water quality criteria to protect the beneficial uses of the receiving water where numeric water quality objectives have not been established. The Regional Water Board's Basin Plans, page IV-16.00 and IV-21 Sacramento-San Joaquin Rivers and Tulare Lake, respectively each contain an implementation policy ("Policy for Application of Water Quality Objectives" and "Application of Water Quality Objectives") (Sacramento-San Joaquin Rivers Basin Plan and Tulare Lake Basin Plan, respectively) that specifies the Regional Water Board "*will, on a case-by-case basis, adopt numerical limitations in orders which will implement the narrative objectives*." This Policy complies with 40 CFR section 122.44(d)(1). With respect to narrative objectives, the Regional Water Board must establish effluent limitations using one or more of three specified sources, including (1) EPA's published water quality criteria, (2) a proposed state criterion (*i.e*., water quality objective) or an explicit state policy interpreting its narrative water quality criteria (*i.e*., the Regional Water Board's "Policy for Application of Water Quality Objectives")(40 CFR 122.44(d)(1) (vi) (A), (B) or (C)), or (3) an indicator parameter. The Basin Plans contain a narrative objective requiring that: "*All waters shall be maintained free of toxic substances in concentrations that produce detrimental physiological responses in human, plant, animal, or aquatic life*" (narrative toxicity objective). The Basin Plans require the application of the most stringent objective necessary to ensure that surface water and groundwater do not contain chemical constituents, discoloration, toxic substances, radionuclides, or taste and odor producing substances that adversely affect beneficial uses. The Basin Plans state that material and relevant information, including numeric criteria, and recommendations from other agencies and scientific literature will be utilized in evaluating compliance with the narrative toxicity objective. The Basin Plans also limit chemical constituents in concentrations that adversely affect surface water beneficial uses. For waters designated as municipal, the Basin Plans specify that, at a minimum, waters shall not contain concentrations of constituents that exceed Maximum Contaminant Levels (MCL) of Title 22, CCR. The Basin Plans further state that, to protect all beneficial uses, the Regional Water Board may apply limits more stringent than MCLs.

A. Discharge Prohibitions

The prohibitions set forth in the Order represent acts that are unacceptable to the Regional Water Board.

1. Prohibition A concerns a change in location or manner of the discharge, or a change in its character, from what was provided in the RWD and evaluated for compliance with the CWC and CWA. Discharge requirements in this Order may not be

protective of water quality if there is a substantial change, and hence such is prohibited.

2. Prohibition B prohibits bypass pursuant to 40 CFR 122.41 (m)(4), with federal allowance for exceptions set forth in section 1.G of Attachment D, Standard Provisions. It also prohibits overflows, which concerns release of untreated and partially treated wastewater.

3. Prohibition C reflects two general situations that, if created, justify cleanup or abatement enforcement activities and assessment of administrative civil liabilities.

4. Prohibition D concerns two categories of waste that are subject to full containment as prescribed by Title 23 and Title 27 of the California Code of Regulations and, if discharged, have high potential for creating a condition that would violate Prohibition C as well.

5. Prohibition E incorporates prohibitions set forth in the Basin Plans and not covered by the preceding prohibitions.

B. Technology-Based Effluent Limitations

1. Scope and Authority

Regulations promulgated in 40 CFR section 125.3(a)(1) require technology-based effluent limitations for municipal dischargers to be placed in NPDES permits based on Secondary Treatment Standards or Equivalent to Secondary Treatment Standards.

The Federal Water Pollution Control Act Amendments of 1972 (PL 92-500) established the minimum performance requirements for POTWs [defined in section 304(d)(1)]. Section 301(b)(1)(B) of that Act requires that such treatment works must, as a minimum, meet effluent limitations based on secondary treatment as defined by the USEPA Administrator.

Based on this statutory requirement, USEPA developed secondary treatment regulations, which are specified in 40 CFR part 133. These technology-based regulations apply to all municipal wastewater treatment plants and identify the minimum level of effluent quality attainable by secondary treatment in terms of biochemical oxygen demand (BOD_5), total suspended solids (TSS), and pH.

In addition, DPH has established statewide water recycling criteria in Title 22, CCR, for use of recycled water and has developed guidelines for discharges to surface waters. Based on DPH's guidelines and best professional judgment, disinfected tertiary treatment is necessary to protect the beneficial uses of the receiving waters. The Regional Water Board consults with the DPH on reclamation and surface water discharges in accordance with the terms specified in a Memorandum of Agreement between DPH and the State Water Board.

2. Applicable Technology-Based Effluent Limitations

a. **BOD_5, TSS, and Settleable Solids.** 40 CFR part 133 establishes the minimum weekly and monthly average level of effluent quality attainable by secondary treatment for BOD_5 and TSS. As disinfected tertiary treatment is necessary for discharges from the ST/WRF, the final effluent limitations for BOD_5 and TSS are based on the technical capability of the tertiary process. BOD_5 is a measure of the amount of oxygen used in the biochemical oxidation of organic matter. The secondary and tertiary treatment standards for BOD_5 and TSS are indicators of the effectiveness of the treatment processes. The principal design parameter for wastewater treatment plants is the daily BOD_5 and TSS loading rates and the corresponding removal efficiency of the system. The application of tertiary treatment processes results in the ability to achieve lower levels for BOD_5 and TSS than the secondary standards; the 30-day average BOD_5 and TSS limitations have been revised to 10 mg/L, which is technically based on the capability of a tertiary system. In addition to the average weekly and average monthly effluent limitations, a daily maximum effluent limitation for BOD_5 and TSS is included in the Order to ensure that the treatment works are not organically overloaded and operate in accordance with design capabilities. See Table F-2 for final technology-based effluent limitations required at Discharge Points 001 and 002 by this Order. In addition, 40 CFR section 133.102, in describing the minimum level of effluent quality attainable by secondary treatment, states that the 30-day average percent removal shall not be less than 85 percent. The application of tertiary treatment processes results in the ability to achieve higher treatment efficiencies for BOD_5 and TSS than the secondary standards. This Order contains a limitation requiring an average of 90 percent removal of BOD_5 and TSS over each calendar month, which is technically based on the capability of a tertiary system.

This Order contains effluent limits for settleable solids that is technically based on the level of treatment achievable with the proposed treatment train and are consistent with the “best practicable treatment or control” provision of State Water Board Resolution 68-16. This level of treatment also ensures that the discharge will meet the settleable material water quality objective in the Basin Plans.

b. **Total Nitrogen and Ammonia**. Untreated domestic wastewater contains nitrogenous compounds, typically in the form of organic nitrogen and ammonia. The Discharger plans to utilize nitrification and partial denitrification. Nitrification is a biological process that converts organic nitrogen and ammonia to nitrite and converts nitrite to nitrate in an aerobic environment. Denitrification is a biological process that converts nitrate to nitrogen gas under anoxic conditions. Nitrate and nitrite can cause adverse health affects in humans. The Basin Plans contain a Chemical Constituents water quality objective that states that waters shall not contain chemical constituents in concentrations that adversely affect beneficial uses and, at a minimum, that water designated MUN shall not contain concentrations of

chemical constituents in excess of maximum contaminant levels (MCLs) (i.e., drinking water standards) published in Title 22, CCR for water designated MUN. MUN currently applies to the San Joaquin River and groundwater underlying the potential recycled water reuse areas. The primary MCL for the protection of human health from nitrate is equal to 10 mg/L (measured as nitrogen).

Under certain conditions, ammonia can cause toxicity to aquatic organisms in surface waters. Untreated domestic wastewater typically contains ammonia at concentrations that, if not properly treated, are highly toxic to aquatic life. Ammonia toxicity in surface water is affected by the temperature and pH. Because this is a new facility, no effluent data exists for ammonia, temperature, and pH. Therefore, this Order requires the Discharger to collect the data necessary to determine if there is reasonable potential for the discharges to Fancher Creek, the Diversion Channel, and Little Dry Creek to cause or contribute to an exceedance of water quality objectives for ammonia.

This Order establishes effluent limitations for total nitrogen and ammonia that are based on the consultant's performance criteria (as expressed in the City of Clovis *ST/WRF Engineering Report for the Production, Distribution, and Use of Recycled Water*, which was submitted to the DPH on July 27, 2007) for the proposed wastewater treatment system. These technology-based effluent limitations are consistent with the primary MCL for nitrate and will provide an enforceable ceiling for ammonia until data is collected to determine whether a more stringent water quality-based ammonia effluent limitation is necessary.

Table F-2. Summary of Technology-based Effluent Limitations

Parameter	Units	Effluent Limitations		
		Average Monthly	Average Weekly	Maximum Daily
Biochemical Oxygen Demand (BOD_5) @ 20°C	mg/L	10	15	20
	lbs/day	234[1] 467[2]	350[1] 701[2]	467[1] 935[2]
Total Suspended Solids (TSS)	mg/L	10	15	20
	lbs/day	234[1] 467[2]	350[1] 701[2]	467[1] 935[2]
Settleable Solids	mL/L	0.1	--	0.2
Ammonia, Total (as N)	mg/L	1.0	--	--
Nitrogen, Total (as N)	mg/L	10	--	--

[1] Based on a design flow of 2.8 MGD for Phase I
[2] Based on a design flow of 5.6 MGD for Phase II.

C. Water Quality-Based Effluent Limitations (WQBELs)

1. Scope and Authority

As specified in 40 CFR section 122.44(d)(1)(i), permits are required to include WQBELs for pollutants (including toxicity) that are or may be discharged at levels that cause, have reasonable potential to cause, or contribute to an in-stream excursion above any state water quality standard. The process for determining reasonable potential and calculating WQBELs when necessary is intended to protect the designated uses of the receiving water as specified in the Basin Plans, and achieve applicable water quality objectives and criteria that are contained in other state plans and policies, or any applicable water quality criteria contained in the California Toxics Rule (CTR) and National Toxics Rule (NTR).

2. Applicable Beneficial Uses and Water Quality Criteria and Objectives

a. **Receiving Water.** Discharge Point 001 is to Fancher Creek, which is a Valley Floor Water. Discharge Point 002 is to the Diversion Channel from Big Dry Creek Reservoir to Little Dry Creek. Little Dry Creek is tributary to the San Joaquin River. Section III discusses the beneficial uses for the two discharge locations.

b. **Hardness.** While no effluent limitation for hardness is necessary in this Order, hardness is critical to the assessment of the need for, and the development of, effluent limitations for certain metals. The *California Toxics Rule*, at (c)(4), states the following:

"Application of metals criteria. (i) *For purposes of calculating freshwater aquatic life criteria for metals from the equations in paragraph (b)(2) of this section, for waters with a hardness of 400 mg/L or less as calcium carbonate, the actual ambient hardness of the surface water* <u>*shall*</u> *be used in those equations*." [emphasis added]

The State Water Board, in footnote 19 to Water Quality Order No. 2004-0013, stated: "*We note that…the Regional Water Board…applied a variable hardness value whereby effluent limitations will vary depending on the actual, current hardness values in the receiving water. We recommend that the Regional Water Board establish either fixed or seasonal effluent limitations for metals, as provided in the SIP, rather than 'floating' effluent limitations*."

Effluent limitations for the discharge must be set to protect the beneficial uses of the receiving water for all discharge conditions. In the absence of the option of including condition-dependent, "floating" effluent limitations that are reflective of actual conditions at the time of discharge, effluent limitations must be set using a reasonable worst-case condition in order to protect beneficial uses for all discharge conditions. Because this is a new facility, no data exists for the effluent and for certain metals. Therefore, this Order requires the Discharger to

collect the data necessary to determine reasonable worst-case conditions to establish effluent limitations for certain metals to protect beneficial uses if reasonable potential exists to cause or contribute to an exceedance of water quality objectives for certain metals contained in the CTR.

c. **Assimilative Capacity/Mixing Zone.** The discharge to Fancher Creek will be downstream of FID's headgates southwest of McKinley and Highland Avenues. As described in this Fact Sheet (Section II.B.3), Fancher Creek conveys approximately 127,557 acre-feet per year of irrigation water during the irrigation season and conveys storm water and fish passage flows during the non-irrigation season. Although dilution may exist, the Discharger has not provided the information necessary for the Regional Water Board to make a determination on allowing a mixing zone pursuant to Section 1.4.2.2 of the SIP. Due to the lack of adequate information regarding available assimilative capacity for Fancher Creek, the Diversion Channel, or Little Dry Creek, the Regional Water Board has evaluated the discharge without the benefit of dilution in this Order. The water quality based effluent limitations are based on the application of water quality criteria or objectives at the point of discharge to Fancher Creek, the Diversion Channel, and Little Dry Creek. The Discharger may elect, as an alternative means of compliance with any criteria or objective that proves difficult to meet, to conduct a mixing zone study to evaluate available assimilative capacity. If requested, the Regional Water Board will review such studies and, if warranted, may reopen this permit to make appropriate changes to the effluent limitations.

3. Determining the Need for WQBELs

a. CWA section 301 (b)(1) requires NPDES permits to include effluent limitations that achieve technology-based standards and any more stringent limitations necessary to meet water quality standards. Water quality standards include the Basin Plans' beneficial uses and narrative and numeric water quality objectives, State Water Board-adopted standards, and federal standards, including the CTR and NTR. The Basin Plans include numeric site-specific water quality objectives and narrative objectives for toxicity, chemical constituents, and tastes and odors. The narrative toxicity objective states: "*All waters shall be maintained free of toxic substances in concentrations that produce detrimental physiological responses in human, plant, animal, or aquatic life.*" With regards to the narrative chemical constituents objective, the Basin Plans state that waters shall not contain chemical constituents in concentrations that adversely affect beneficial uses. At minimum, "…*water designated for use as domestic or municipal supply (MUN) shall not contain concentrations of chemical constituents in excess of the maximum contaminant levels (MCLs)*" in Title 22 of CCR. The narrative tastes and odors objective states: "*Water shall not contain taste- or odor-producing substances in concentrations that impart undesirable tastes or odors to domestic or municipal water supplies or to fish flesh or other edible products of aquatic origin, or that cause nuisance, or otherwise adversely affect beneficial uses.*"

b. Federal regulations require effluent limitations for all pollutants that are or may be discharged at a level that will cause or have the reasonable potential to cause, or contribute to an in-stream excursion above a narrative or numerical water quality standard. Given that no influent or effluent data exists for the ST/WRF, the Regional Water Board cannot conduct a thorough reasonable potential analysis. This Order requires monitoring to gather the data necessary to conduct a reasonable potential analysis and may be reopened to include effluent limitations for those pollutants that show a reasonable potential to cause or contribute to an in-stream excursion above a narrative or numerical water quality objective.

c. **Chlorine Residual.** Chlorine is not used for disinfection of the tertiary-treated wastewater; Ultraviolet (UV) light is used. However, the Discharger intends to use small amounts sodium hypochlorite periodically to disinfect the membranes in the wastewater treatment process. After the membranes are cleaned with the sodium hypochlorite solution, the chlorine-bearing cleaning solution is cycled back to the headworks of the facility. The chlorine present is not expected to survive the high organic-rich primary and secondary treatment process. Because this is a new facility, no effluent data is available to determine if discharge from the ST/WRF has the reasonable potential to cause or contribute to an exceedance of water quality criteria for chlorine residual. However, because chlorine is considered to be extremely toxic to aquatic organisms, this Order contains effluent limitations for chlorine residual to ensure the discharge does not cause or contribute to an in-stream excursion above the Basin Plans' narrative toxicity objective.

   The USEPA recommends, in its Ambient Water Quality Criteria for the protection of fresh water aquatic life, maximum 1-hour average and 4-day average chlorine concentrations of 0.019 mg/L and 0.011 mg/L, respectively. The USEPA Technical Support Document for Water Quality-Based Toxics Control [EPA/505/2-90-001] contains statistical methods for converting chronic (four-day) and acute (one-hour) aquatic life criteria to average monthly and maximum daily effluent limitations based on the variability of the existing data and the expected frequency of monitoring. However, because chlorine is an acutely toxic constituent that can and will be monitored continuously, an average one-hour limitation is considered more appropriate than an average daily limitation. Average one-hour and four-day limitations for chlorine, based on these criteria, are included in this Order. The chlorine residual effluent limitations required in this Order are protective of aquatic organisms in the undiluted discharge. If compliance is maintained, the Regional Water Board does not anticipate residual chlorine impacts to benthic organisms.

d. **Electrical Conductivity. (see Subsection"g." Salinity)**

e. **Pathogens**. To protect identified beneficial uses from infectious agents (pathogens), the wastewater must be adequately treated. The principal pathogens that may be present in raw sewage may be classified into three broad groups: bacteria, parasites, and viruses. Treatment, consisting of chemical

coagulation, sedimentation, and filtration, removes approximately 99.5% of pathogens. Disinfection of the tertiary effluent ensures greater removal.

DPH water recycling criteria in Title 22, CCR, Division 4, Chapter 3 (Title 22) are intended to ensure that reuse of wastewater does not pose an unacceptable health risk in various use situations. Title 22 requires that for sprinkler irrigation of food crops, parks, playgrounds, schoolyards, and other areas of similar public access, recycled water must be adequately disinfected, oxidized, coagulated, clarified, and filtered, and that the effluent total coliform levels not exceed 2.2 MPN/100 mL as a 7-day median, not exceed 23 MPN/100 mL in more than one sample in any 30-day period, and never exceed 240 MPN/100 mL (disinfected tertiary treatment). It defines this as "disinfected tertiary treatment," and adds that this is the level required as the supply of non-restricted recreational impoundments. A non-restricted recreational impoundment is defined as "*…an impoundment of recycled water, in which no limitations are imposed on body-contact water recreational activities.*"

It is not necessary to be exact in quantifying pathogens in this circumstance as they are living and mobile, multiply exponentially and are impractical to quantify exactly or regulate by weekly average limitations. Tests for detection and enumeration of indicator organisms are used in place of tests for pathogens. The accepted general indicator for pathogenic bacteria is coliform bacteria, which has been authenticated as a reliable standard. Test results allow prediction of coliform organism populations as a most probable number and limitations typically are specified in terms of daily maximum and a 7-day median. Hence, a total coliform population of 2.2 MPN/100 mL, in the opinion of the DPH, ensures the risk of disease from pathogenic bacteria is at an acceptable level for any of the identified direct uses.

To ensure that other pathogen groups are successfully reduced requires a high degree of filtration as well as the disinfection level described above. Filtration ensures a higher quality effluent by removing finer organic material, and it increases the effectiveness and reliability of the disinfection process. The performance standard for effective filtration is measured in turbidity. Tertiary treatment technology that uses membrane filtration can consistently produce an effluent that does not exceed 0.2 nephelometric turbidity units (NTU) more than 5% of the time within a 24-hour period and 0.5 NTU at any time. A disinfected tertiary effluent that achieves this turbidity and the total coliform density previously described ensures that the risk of disease from all pathogen groups is at an acceptable level for any of the identified direct uses.

Title 22 only applies to direct reuse. In indirect use situations where human exposure is or will be similar, it is reasonable to conclude that the health risk will be acceptable if the treatment process and results are the same as, or comparable to, what Title 22 requires for the same exposure in direct reuse. The receiving water is used for irrigation of agricultural land and for contact recreation purposes (i.e., unrestricted). Disinfected tertiary treatment is also recommended

in DPH's "*Uniform Guidelines for the Disinfection of Wastewater*" for surface water discharges under conditions similar to the Diversion Channel and Fancher Creek (e.g., limited dilution, REC-1, discharge occurs upstream of residential areas, and ready access to the watercourse). As these indirect uses are similar to the direct uses where Title 22 specifies a minimum of "disinfected tertiary treatment," the Regional Water Board concludes that "disinfected tertiary treatment" is appropriate for Discharge Points 001 and 002. The method of treatment is not prescribed by this Order, but the Order does specify that wastewater must be treated using a process and to a level the same as or equivalent to that of Title 22.

Monitoring turbidity allows immediate detection of filter failure that enables rapid corrective action. Coliform testing requires several hours or days to identify high coliform concentrations.

To ensure the ST/WRF achieves appropriate disinfected tertiary treatment, this Order contains effluent limitations reflecting a tertiary level of treatment and disinfection, or fail-safe equivalent, and associated monitoring for Discharge Points 001 and 002 compliance. In accordance with CWC Section 13241, the Regional Water Board has considered the following:

i. The past, present and probable future beneficial uses of Fancher Creek and the Diversion Channel include agricultural supply, including stock watering; industrial process supply; industrial service supply; water contact recreation; non-contact water recreation; warm freshwater habitat; wildlife habitat; rare, threatened, or endangered species; and groundwater recharge. The past, present, and probable future beneficial uses of Little Dry Creek include municipal and domestic supply, agricultural irrigation, agricultural stock watering, industrial process supply, water contact recreation, non-contact water recreation, warm freshwater habitat, cold freshwater habitat, warm fish migration habitat, cold fish migration habitat, warm spawning habitat, and wildlife habitat.

ii. The environmental characteristics of the hydrographic unit, including the quality of the available water, will be improved by the requirement to provide disinfected tertiary treatment for this wastewater discharge. Disinfected tertiary treatment will allow for the reuse of the undiluted wastewater for food crop irrigation and contact recreation activities that would otherwise be unsafe according to DPH.

iii. Fishable and swimmable water quality conditions can be reasonably achieved through the coordinated control of all factors that affect water quality in the area.

iv. The economic impact of requiring an increased level of treatment has been considered. The loss of beneficial uses within downstream waters, without the disinfected tertiary treatment requirement, which includes prohibiting the

irrigation of food crops and prohibiting public access for contact recreational purposes, would have a detrimental economic impact. In addition to pathogen removal to protect irrigation and recreation, tertiary treatment may also aid in meeting discharge limitations for other pollutants, such as heavy metals, reducing the need for advanced treatment specific for those pollutants.

v. The requirement to provide disinfected tertiary treatment for this discharge will not adversely impact the need for housing in the area. The potential for developing housing in the area will be facilitated by improved water quality, which protects the contact recreation and irrigation uses of the receiving water. DPH recommends that, in order to protect the public health, relatively undiluted wastewater effluent must be treated to a disinfected tertiary level for contact recreational and food crop irrigation uses. Without disinfected tertiary treatment, the downstream waters could not be safely utilized for contact recreation or the irrigation of food crops.

vi. It is the Regional Water Board's policy, (Tulare Lake Basin Plan, page IV-11) to encourage the reuse of wastewater. The Regional Water Board requires dischargers to evaluate how reuse or land disposal of wastewater can be optimized. The need to develop and use recycled water is facilitated by providing a tertiary level of wastewater treatment that will allow for a greater variety of uses in accordance with Title 22, CCR.

vii. The Regional Water Board has considered the factors specified in CWC Section 13263, including considering the provisions in CWC Section 13241, in adopting disinfection and filtration requirements equivalent to Title 22 water recycling criteria. The Regional Water Board finds, on balance, that these requirements are necessary to protect the beneficial uses of Fancher Creek , the Diversion Channel, and Little Dry Creek, including water contact recreation and irrigation uses.

f. **pH.** The Tulare Lake Basin Plan includes a water quality objective that pH not be depressed below 6.5 or raised above 8.3 for surface waters. The Sacramento-San Joaquin Rivers Basin Plan includes a water quality objective for surface waters (except for Goose Lake) that the "…*pH shall not be depressed below 6.5 nor raised above 8.5."* Effluent Limitations for pH are included in this Order based on the more stringent Tulare Lake Basin Plan objectives for pH.

g. **Salinity.** The discharge will contain total dissolved solids (TDS), chloride, sulfate, and electrical conductivity (EC). These are water quality parameters that are indicative of the salinity of the water. Their presence in water can be growth limiting to certain agricultural crops and can affect the taste of water for human consumption. There are no USEPA water quality criteria for the protection of aquatic organisms for these constituents. The Basin Plans contain chemical constituent objectives that incorporate State MCLs, contain narrative objectives, and contain numeric water quality objectives for EC, TDS, sulfate, and chloride.

Table F-3. Salinity Water Quality Criteria/Objectives

Parameter	Agricultural WQ Goal[1]	Secondary MCL[3]	Sacramento-San Joaquin Rivers Basin Plan
EC (µmhos/cm)	700[2]	900	150 umhos/cm (90 percentile)[4]
TDS (mg/L)	450[2]	500	N/A
Sulfate (mg/L)	N/A	250	N/A
Chloride (mg/L)	106[2]	250	N/A

1 Agricultural water quality goals based on *Water Quality for Agriculture*, Food and Agriculture Organization of the United Nations—Irrigation and Drainage Paper No. 29, Rev. 1 (R.S. Ayers and D.W. Westcot, Rome, 1985)

2 Agricultural water quality goals listed provide no restrictions on crop type or irrigation methods for maximum crop yield. Higher concentrations may require special irrigation methods to maintain crop yields or may restrict types of crops grown.

3 The secondary MCLs are stated as a recommended level.

4 The Basin Plan objective applies to the San Joaquin River from Friant Dam to Gravelly Ford. It does not apply to Fancher Creek. There is no numeric water quality objective in the Tulare Lake Basin Plan that applies to Valley Floor Waters.

i. **Chloride**. The recommended secondary MCL for chloride is 250 mg/L. The recommended agricultural water quality goal for chloride, that would apply the narrative chemical constituent objective, is 106 mg/L as a long-term average based on Water Quality for Agriculture, Food and Agriculture Organization of the United Nations—Irrigation and Drainage Paper No. 29, Rev. 1 (R.S. Ayers and D.W. Westcot, Rome, 1985). The 106 mg/L water quality goal is intended to protect against adverse effects on sensitive crops when irrigated via sprinklers. The Discharger 2004 data was for raw wastewater in an existing trunk line. The chloride concentrations ranged from 75 – 106 mg/L with an average of 89 mg/L. Lower chloride concentrations in the long-term are anticipated as the Discharger's surface water treatment plant (For Kings River water) will become about 50 percent of the source water supply.

ii. **Electrical Conductivity (EC)**. The recommended secondary MCL for EC is 900 µmhos/cm. The agricultural water quality goal that would apply the narrative chemical constituents objective, is 700 µmhos/cm as a long-term average based on Water Quality for Agriculture, Food and Agriculture Organization of the United Nations—Irrigation and Drainage Paper No. 29, Rev. 1 (R.S. Ayers and D.W. Westcot, Rome, 1985). The 700 µmhos/cm agricultural water quality goal is intended to prevent reduction in crop yield, with no irrigation management restriction on use of water, for salt-sensitive crops, such as beans, carrots, turnips, and strawberries). Most other crops can tolerate higher EC concentrations without harm, however, as the salinity of the irrigation water increases, more crops will be potentially harmed by the EC except where irrigation management measures can be taken by the farmer to minimize or eliminate any harmful impacts.

Based on source water and existing trunk line sampling information provided by the Discharger, the projected near-term and long-term ECs are approximately 800-860 umhos/cm and 660-700 umhos/cm, respectively. Lower ECs in the long-term are anticipated because of the previously identified Discharger's surface water treatment plant is operating.

Implementation of the effluent limitations included in the Order and in this Fact Sheet (Section IV.C.3.g.iv) below is not expected to cause Fancher Creek to exceed the AGR-based goal of 700 umhos/cm during the irrigation season as irrigation flows will provide significant dilution. There may be times where farmers growing salt-sensitive crops use Fancher Creek water consisting primarily of wastewater (typically would only occur November-February). Any salt related effects are expected to be offset by good quality water delivered by FID during the irrigation season. Furthermore, the expected long-term effluent EC will be directly suitable for unrestricted irrigation use.

As shown in Table F-3 above, the Sacramento-San Joaquin Rivers Basin Plan contains a salinity objective of 150 umhos/cm (90th percentile) for the San Joaquin River from Friant Dam to Gravelly Ford. The Discharger's antidegradation analysis shows that under worst-case conditions the discharge will not exceed the salinity objective. It will utilize up to approximately 50-53 percent of the assimilative capacity during Phase I and 16-19 percent during Phase II. Phase II discharges are expected to utilize less of the available assimilative capacity because restoration flows in the San Joaquin River required by the 2006 settlement agreement between the Natural Resources Defense Council and the United States Bureau of Reclamation are to begin by 1 January 2014. The antidegradation analysis assumed the discharge EC was equivalent to 500 umhos/cm over source water.

Based on available information, it appears unlikely that water from the Diversion Channel and the 2-2.5 mile stretch of Little Dry Creek that will be affected by the discharge is or ever will be applied to salt-sensitive crops. AGR is an unlikely use direct from the Diversion Channel (FMFCD reported that it is not aware of any diversions) and the relevant section of Little Dry Creek. Both watercourses are not managed to provide an irrigation supply, as the flow timing and magnitude are not predictable. They predominantly traverse residential areas (i.e., ranchettes) and areas of non-irrigated native vegetation. The only significant irrigated agriculture occurring in the vicinity of Little Dry Creek is in the San Joaquin River floodplain. California Department of Water Resources land use maps do not indicate that salt sensitive crops are grown in the floodplain. Regardless, the expected long-term wastewater EC will be of suitable quality for unrestricted irrigation use.

iii. **Total Dissolved Solids (TDS)**. The recommended secondary MCL for TDS is 500 mg/L. The recommended agricultural water quality goal for TDS that

would apply the narrative chemical constituent objective is 450 mg/L as a long-term average. The 450 mg/L TDS equates to the EC of 700 umhos/cm, and thus the discussion is the same.

Based on source water and existing trunk line sampling information provided by the Discharger, the projected near-term and long-term TDS are approximately 500 mg/L and 400 mg/L, respectively. For the reasons stated in this Fact Sheet (Section IV.C.3.g.ii.), implementation of the salinity effluent limitations in this Order will protect the beneficial uses of the receiving waters.

iv. **Salinity Effluent Limitations.** The Tulare Lake Basin Plan requires that the incremental increase in salts must be controlled to the extent possible and states, "*The maximum EC shall not exceed the EC of the source water plus 500 micromos/cm*." The Sacramento-San Joaquin Rivers Basin Plan does not contain an adopted numeric water quality objective for Little Dry Creek. However, the Sacramento-San Joaquin Rivers Basin Plan does contain a numeric water quality objective for the San Joaquin River (Friant Dam to Gravelly Ford) of 150 umhos/cm as a 90th percentile. To ensure compliance with the Tulare Lake Basin Plan and the Sacramento-San Joaquin Rivers Basin Plan, this Order requires that the average EC of the discharge shall not exceed the flow-weighted average EC of the source water plus 500 umhos/cm or a maximum of 1,000 umhos/cm, whichever is more stringent. When source water is from more than one source, the EC shall be a flow-weighted average of all sources. Based on source water and existing trunk line sampling information provided by the Discharger, the constraining limitation will be the 500 umhos/cm over source water. During the initial stages of the project, the wastewater would be effectively limited to an EC of approximately 820-850 umhos/cm. As the Discharger increases the contribution of surface water to 50 percent of the source water supply, the wastewater would be effectively limited to an EC of approximately 680-700 umhos/cm.

This Order does not contain effluent limitations for individual salt constituents because exceedance of water quality objectives for these constituents is not expected to occur provided the discharge complies with the EC effluent limitations. This Order requires effluent monitoring of individual salt constituents. If review of any monitoring shows that a particular constituent exceeds water quality objectives, this Order may be reopened and additional effluent limitations added.

h. **Toxicity.** See Section IV.C.4. of this Fact Sheet regarding whole effluent toxicity.

Table F-4. Summary of Water Quality-based Effluent Limitations

Parameter	Units	Effluent Limitations				
		Average Monthly	Average Weekly	Maximum Daily	Instantaneous Minimum	Instantaneous Maximum
pH	Standard Units	--	--	--	6.5	8.3
Total Coliform Organisms	MPN/100 mL	--	--	--	--	240
Effluent total coliforms shall not exceed: 2.2 (MPN) per 100 mL as a 7-day median; and 23 MPN/100 mL more than once in any calendar month.						
Effluent turbidity shall not exceed 0.2 NTU more than 5% of the time within a 24-hour period and 0.5 NTU at any time.						
Effluent Total Residual Chlorine shall not exceed: 0.01 mg/L, as a 4-day average; and, 0.02 mg/L, as a 1-hour average.						
The average annual electrical conductivity (EC) (@ 25°C) of the effluent discharged shall not exceed the flow-weighted average annual EC (@ 25°C) of the source water plus 500 umhos/cm or a maximum of 1,000 umhos/cm, whichever is more stringent. When source water is from more than one source, the EC shall be a flow-weighted average of all sources.						

4. Whole Effluent Toxicity (WET)

For compliance with the Basin Plans' narrative toxicity objective, this Order requires the Discharger to conduct whole effluent toxicity testing for acute and chronic toxicity, as specified in the Monitoring and Reporting Program (Attachment E, Section V.). This Order also contains effluent limitations for acute toxicity and requires the Discharger to implement best management practices to investigate the causes of, and identify corrective actions to reduce or eliminate effluent toxicity.

a. **Acute Aquatic Toxicity.** The Basin Plans contain narrative toxicity objectives that state, "*All waters shall be maintained free of toxic substances in concentrations that produce detrimental physiological responses in human, plant, animal, or aquatic life.*" (Sacramento-San Joaquin Rivers Basin Plan at III-8.01 and Tulare Lake Basin Plan at III-6) The Basin Plans also state that, "…*effluent limits based upon acute biotoxicity tests of effluents will be prescribed where appropriate*…". USEPA Region 9 provided guidance for the development of acute toxicity effluent limitations in the absence of numeric water quality objectives for toxicity in its document titled "Guidance for NPDES Permit Issuance", dated February 1994. In section B.2. "Toxicity Requirements" (pgs. 14-15) it states that, "*In the absence of specific numeric water quality objectives for acute and chronic toxicity, the narrative criterion 'no toxics in toxic amounts' applies. Achievement of the narrative criterion, as applied herein, means that ambient waters shall not demonstrate for acute toxicity: 1) less than 90% survival, 50% of the time, based on the monthly median, or 2) less than 70% survival, 10% of the time, based on any monthly median. For chronic toxicity, ambient waters shall not demonstrate a test result of greater than 1 TUc."* Accordingly, effluent limitations for acute toxicity have been included in this Order as follows:

Acute Toxicity. Survival of aquatic organisms in 96-hour bioassays of undiluted waste shall be no less than:

For any one bioassay ----------	70%
Median for any three or more consecutive bioassays ---------	90%

b. **Chronic Aquatic Toxicity.** The Basin Plans contain narrative toxicity objectives that state, "*All waters shall be maintained free of toxic substances in concentrations that produce detrimental physiological responses in human, plant, animal, or aquatic life*." (Sacramento-San Joaquin Rivers Basin Plan at III-8.01; and Tulare Lake Basin Plan at III-6.) Adequate WET data is not available to determine if the discharge has reasonable potential to cause or contribute to an in-stream excursion above of the Basin Plans' narrative toxicity objective. Attachment E of this Order requires quarterly chronic WET monitoring for demonstration of compliance with the narrative toxicity objective.

In addition to WET monitoring, Special Provisions VI.C.2.a. requires the Discharger to submit to the Regional Water Board an Initial Investigative TRE Work Plan for approval by the Executive Officer, to ensure the Discharger has a plan to immediately move forward with the initial tiers of a TRE, in the event effluent toxicity is encountered in the future. The provision also includes a numeric toxicity monitoring trigger and requirements for accelerated monitoring, as well as, requirements for TRE initiation if a pattern of toxicity is demonstrated.

D. Final Effluent Limitations

1. Mass-based Effluent Limitations.

Title 40 CFR 122.45(f)(1) requires effluent limitations be expressed in terms of mass, with some exceptions, and 40 CFR 122.45(f)(2) allows pollutants that are limited in terms of mass to additionally be limited in terms of other units of measurement. This Order includes effluent limitations expressed in terms of mass and concentration. In addition, pursuant to the exceptions to mass limitations provided in 40 CFR 122.45(f)(1), some effluent limitations are not expressed in terms of mass, such as pH and temperature, and when the applicable standards are expressed in terms of concentration (e.g. CTR criteria and MCLs) and mass limitations are not necessary to protect the beneficial uses of the receiving water.

Mass-based effluent limitations were calculated based upon the permitted average annual discharge flow allowed in Section IV.D. of the Limitations and Discharge Requirements.

2. Averaging Periods for Effluent Limitations.

Title 40 CFR 122.45 (d) requires average weekly and average monthly discharge limitations for POTWs unless impracticable. However, for toxic pollutants and pollutant parameters in water quality permitting, the USEPA recommends the use of

a maximum daily effluent limitation in lieu of average weekly effluent limitations for two reasons. "*First, the basis for the 7-day average for POTWs derives from the secondary treatment requirements. This basis is not related to the need for assuring achievement of water quality standards. Second, a 7-day average, which could comprise up to seven or more daily samples, could average out peak toxic concentrations and therefore the discharge's potential for causing acute toxic effects would be missed.*" (TSD, pg. 96) For BOD, TSS, settleable solids, pH, coliform, chlorine, and turbidity, weekly average effluent limitations have been replaced or supplemented with effluent limitations utilizing shorter averaging periods. The rationale for using shorter averaging periods for these constituents is described in this Fact Sheet (Sections IV.B.2 and IV.C.3.) above.

3. Satisfaction of Anti-Backsliding Requirements. – Not Applicable

This Order permits a new discharge so anti-backsliding provisions do not apply.

4. Satisfaction of Antidegradation Policy

a. **Surface Water Impacts.** This Order involves a new discharge of pollutants and waste and must be evaluated for consistency with the antidegradation provisions of 40 CFR 131.12, State Water Board Resolution 68-16, and the State Water Board Administrative Procedure Update (APU) No. 90-004. The following is based on the Antidegradation Analysis Report (AAR) submitted by the Discharger that evaluates the effect of the proposed discharges on the Diversion Channel, Little Dry Creek, San Joaquin River, and Fancher Creek.

Because this is a new facility, data does not exist to accurately determine effluent quality. To perform the antidegradation analysis, the Discharger developed a conservative characterization of the expected effluent quality. Effluent concentrations were estimated from a combination of information sources, including the established performance criteria, source water quality, local wastewater characteristics, and knowledge of the selected treatment process. The Discharger subsequently determined whether each of the four receiving water bodies of interest (Fancher Creek, the Diversion Channel, Little Dry Creek, and San Joaquin River) had assimilative capacity for the constituents of interest (Federal Tier 2 waters) or not (Federal Tier 1 waters). The baseline water quality was compared to the water quality objective for each constituent expected to be present in the ST/WRF effluent. If the baseline concentration was lower than the objective, the water was assigned Tier 2; otherwise, the water was assigned to Tier 1. If the receiving water's critical low conditions in the near-field receiving waters were zero flow, the water body was considered to have no assimilative capacity and it was treated as a Tier 1 water body. The issue of salinity in the San Joaquin River was addressed separately in the study and is therefore addressed separately herein.

i. **Diversion Channel and Fancher Creek.** The critical low flow condition for the Diversion Channel and Fancher Creek is zero background flow. Thus, the ST/WRF effluent would represent 100 percent of flow, no assimilative

capacity would exist, and the Diversion Channel and Fancher Creek are considered Tier 1 for all constituents. The water quality assessment involved the comparison of the conservative estimated effluent characteristics to the numeric water quality objectives and/or criteria. (See Table F-5) Results indicated that the ST/WRF effluent would be in attainment of numeric water quality objectives and/or criteria for these waterbodies with the exception of ammonia (Table F-5). Additional assessment was required for ammonia as described below.

Ammonia. The weekly average ammonia concentration is expected to be <0.5 mg/L. However, the ammonia concentration could increase to 1.0 during upset or maintenance periods. The pH of the effluent is expected to be in the 7.0-7.5 range. At a pH of 7.5 and an assumed temperature of 30° C, the maximum allowable total ammonia concentration in the receiving water would be approximately 1.6 mg/L (as N). For these reasons, the effluent will most likely be in compliance with the anticipated ammonia criteria through expected treatment plant performance for both ammonia and pH. Until actual effluent data is available, this cannot be certain. In lieu of establishing a water quality based effluent limitation, this Order contains a technology based ammonia effluent limitation until actual effluent data is available to calculate the water quality criteria and to determine if the effluent has reasonable potential to cause or contribute to a violation of the water quality criteria.

Table F-5. Diversion Channel and Fancher Creek Assessment Results

Parameter	Units	Assumed Effluent Concentration	Basis of Effluent Concentration[1]	Most Stringent Criteria	Basis of Most Stringent Criteria[2]	Potential Criteria Exceedance
Ammonia	mg/L	0.5 – 1.0	MBR Tech	1.6	Basin Plan	I[3]
Antimony	ug/L	0.144	Influent Max, applied 71.13% removal factor	4,300	CTR-H2	N
Arsenic	ug/L	0.137	Influent Max, applied 90.89% removal factor	150	CTR-AC	N
Bacteria (coliform)	MPN/100 mL	2.2	MBR Tech	23	Basin Plan	N
Bis(2-ethylhexly) phthalate	ug/L	0.75-5.0	Influent Max, applied 80-97% removal factor	5.9	CTR-H2	N
Boron	mg/L	0.24	MBR Tech	1	Basin Plan	N
Butybenzyl phthalate	ug/L	2.8	Influent Max, applied 80% removal factor	5,200	CTR-H2	N
Cadmium	ug/L	0.020	Influent Max, applied 90.05% removal factor	2.03	CTR-AC	N
Chromium (III)	ug/L	0.158	Influent Max, applied 91.25% removal factor	169	CTR-AC	N
Copper	ug/L	2.5	Regional WWRF Max	7.5	CTR-AC	N

Parameter	Units	Assumed Effluent Concentration	Basis of Effluent Concentration[1]	Most Stringent Criteria	Basis of Most Stringent Criteria[2]	Potential Criteria Exceedance
Diethyl phthalate	ug/L	2.6	Influent Max, applied 80% removal factor	120,000	CTR-H2	N
Di-n-butyl phthalate	ug/L	3.2	Influent Max, applied 80% removal factor	12,000	CTR-H2	N
Lead	ug/L	0.131	Influent Max, applied 91.83% removal factor	2.32	CTR-AC	N
Mercury	ug/L	0.009	Influent Max, applied 90.16% removal factor	0.051	CTR-H2	N
Nickel	ug/L	4.37	Influent Max, applied 51.44% removal factor	42.3	CTR-AC	N
pH	Standard Units	7.5	Influent Median	6.5-8.3 / 0.3 (std unit change)	Basin Plan	N
Phenol	ug/L	1.19	Influent Max, applied 95.25% removal factor	4,600,000	CTR-H2	N
Selenium	ug/L	0.5	Regional WWRF Max	5	CTR-AC	N
Silver	ug/L	0.136	Influent Max, applied 92.42% removal factor	2.65	CTR-AA	N
Toluene	ug/L	0.064	Influent Max, applied 96% removal factor	200,000	CTR-H2	N
Turbidity	NTU	0.5	MBR Tech	0.724 (20% increase)	Basin Plan	N
Zinc	ug/L	50	Regional WWRF Max	97.1	CTR-AA	N

[1] Abbreviations: MBR Tech = Membrane Bioreactor treatment technology; Influent Max = Untreated wastewater; Regional WWRF = Fresno-Clovis Regional Wastewater Treatment Facility effluent
[2] Abbreviations: Basin Plan = Tulare Lake Basin Plan; CTR-H2 = California Toxics Rule Human Consumption of Organisms; CTR-AC = California Toxics Rule Aquatic Chronic; CTR-AA = California Toxics Rule Aquatic Acute
[3] Indeterminate (see ammonia section above)

ii. **Little Dry Creek**. As with the Diversion Channel and Fancher Creek, the critical streamflow values for Little Dry Creek are zero. Thus, the ST/WRF effluent would represent 100 percent of flow in Little Dry Creek. No assimilative capacity would exist, and the Creek is considered Tier 1 for all constituents. The water quality assessment involved the comparison of the conservatively estimated effluent characteristics to the numeric water quality objectives and/or criteria. (See Table F-6.) Results indicated that the ST/WRF effluent would be in attainment of most numeric water quality objectives and/or criteria for this waterbody (Table F-6.), while it is indeterminate for ammonia and bis(2-ethylhexyl)phthalate as described below.

Ammonia. Same analysis as for the Diversion Channel and Fancher Creek.

Bis(2-ethylhexyl)phthalate. Compliance with the water quality objective for bis(2-ethylhexyl)phthalate depends on the removal efficiency of the ST/WRF. Removal efficiencies reported in literature range from 80-97 percent. Applying an assumed removal efficiency of 80 percent to the maximum observed raw wastewater concentration results in an estimated effluent concentration that exceeds the water quality objective. However, applying an assumed removal efficiency of 97 percent results in an estimated concentration lower than the water quality objective. A 92.8 percent removal efficiency would be necessary to prevent an exceedance of the criteria.

None of the literature reviewed by the Discharger's consultant involved advanced wastewater treatment processes like that which will be employed at the ST/WRF. The consultant reported (with supporting literature references) that bis(2-ethylhexyl)phthalate is susceptible to aerobic degradation and sorption to solids. Given this susceptibility and the high solids removal rate associated with membrane bioreactor treatment technology, the Discharger's consultant stated, ". . . it is reasonable to conclude that the ST/WRF will achieve removal rates on the high end of the reported range, if not higher. For these reasons, it [is] concluded that proper operation of the ST/WRF can prevent exceedance of water quality objectives for this parameter."

This Order requires the Discharger to sample for bis(2-ethylhexyl)phthalate. Should monitoring results show that the discharge has the reasonable potential to cause or contribute to an exceedance of water quality objectives, this Order may be reopened to include appropriate effluent limitations.

Table F-6. Little Dry Creek Assessment Results

Parameter	Units	Assumed Effluent Concentration	Basis of Effluent Concentration[1]	Most Stringent Criteria	Basis of Most Stringent Criteria[2]	Potential Criteria Exceedance
Ammonia	mg/L	0.5 – 1.0	MBR Tech	1.6	EPA- AC	I[3]
Antimony	ug/L	0.144	Influent Max, applied 71.13% removal factor	6	MCL	N
Arsenic	ug/L	0.137	Influent Max, applied 90.89% removal factor	10	MCL	N
Bacteria (coliform)	MPN/100 mL	2.2	MBR Tech	23	Basin Plan	N
Bis(2-ethylhexly) phthalate	ug/L	0.75-5.0	Influent Max, applied 80-97% removal factor	1.8	CTR-H1	-I[3]
Boron	mg/L	0.24	MBR Tech	1	Basin Plan	N
Butybenzyl phthalate	ug/L	2.8	Influent Max, applied 80% removal factor	3,000	CTR-H1	N
Cadmium	ug/L	0.020	Influent Max, applied 90.05% removal factor	2.03	CTR-AC	N

Parameter	Units	Assumed Effluent Concentration	Basis of Effluent Concentration[1]	Most Stringent Criteria	Basis of Most Stringent Criteria[2]	Potential Criteria Exceedance
Chromium (III)	ug/L	0.158	Influent Max, applied 91.25% removal factor	50	MCL (total Cr)	N
Copper	ug/L	2.5	Regional WWRF Max	7.54	CTR-AC	N
Diethyl phthalate	ug/L	2.6	Influent Max, applied 80% removal factor	23,000	CTR-H1	N
Di-n-butyl phthalate	ug/L	3.2	Influent Max, applied 80% removal factor	2,700	CTR-H1	N
Lead	ug/L	0.131	Influent Max, applied 91.83% removal factor	2.32	CTR-AC	N
Mercury	ug/L	0.009	Influent Max, applied 90.16% removal factor	0.050	CTR-H1	N
Nickel	ug/L	4.37	Influent Max, applied 51.44% removal factor	42.3	CTR-AC	N
pH	Standard Units	7.5	Influent Median	6.5-8.3 / 0.5 (std unit change)	Basin Plan	N
Phenol	ug/L	1.19	Influent Max, applied 95.25% removal factor	21,000	CTR-H1	N
Selenium	ug/L	0.5	Regional WWRF Max	5	CTR-AC	N
Silver	ug/L	0.136	Influent Max, applied 92.42% removal factor	2.65	CTR-AA	N
Toluene	ug/L	0.064	Influent Max, applied 96% removal factor	150	MCL	N
Turbidity	NTU	0.5	MBR Tech	2.22 (20% increase)	Basin Plan	N
Zinc	ug/L	50	Regional WWRF Max	97.1	CTR-AC	N

[1] Abbreviations: MBR Tech = Membrane Bioreactor treatment technology; Influent Max = Untreated wastewater; Regional WWRF = Fresno-Clovis Regional Wastewater Treatment Facility effluent

[2] Abbreviations: EPA-AC = USEPA Ambient Water Quality Criteria; MCL = Maximum Contaminant Level; Basin Plan = Tulare Lake Basin Plan; CTR-H1 = California Toxics Rule Human Consumption of Water and Organisms; CTR-AC = California Toxics Rule Aquatic Chronic; CTR-AA = California Toxics Rule Aquatic Acute

[3] Indeterminate (see ammonia and Bis(2-ethylhexly) phthalate section above)

iii. **San Joaquin River – Friant Dam to Mendota Pool**. The San Joaquin River has non-zero critical flow conditions and assimilative capacity for most constituents. Therefore, the Discharger distinguished between Tier 1 and Tier 2 constituents by directly comparing estimated effluent characteristics to water quality objectives for Tier 1 constituents and by performing mixing calculations to determine if the ST/WRF would use more than 10 percent of the available assimilative capacity for Tier 2 constituents. This approach is consistent with recent USEPA guidance, which recommends 10 percent as a

measure of significance for identifying substantial lowerings of water quality that should receive a full Tier 2 antidegradation review. (USEPA Memorandum *Regarding Tier 2 Antidegradation Reviews and Significance Thresholds*.) The ST/WRF is not expected to cause an exceedance of any water quality objective in the San Joaquin River under Phase I or Phase II discharge conditions.

Under the conservative assumptions used in the AAR, the ST/WRF discharge is predicted to use more than 10 percent of the assimilative capacity for zinc and salinity, and potentially for bis(2-ethylhexyl)phthalate, copper, and silver. Salinity results are in Fact Sheet, Section IV.D.4.a.iv. Bis(2-ethylhexyl)phthalate, copper, silver, and zinc are evaluated in the following paragraphs.

Bis(2-ethylhexyl)phthalate. No bis(2-ethylhexyl)phthalate monitoring data were available for the San Joaquin River. The background concentration was assumed to be zero. Under this assumption, the predicted use of assimilative capacity depends on the ST/WRF removal efficiency. Removal efficiencies reported in literature range from 80-97 percent. When applying an assumed removal efficiency of 80 percent to the maximum observed raw wastewater concentration, discharges from the ST/WRF are predicted to use 11 percent of the assimilative capacity under Phase I discharge conditions and 6 percent under Phase II. When removal efficiencies on the higher end of the range are applied, discharges from the ST/WRF are predicted to use significantly less than 10 percent of the assimilative capacity. For reasons described in Fact Sheet, Section IV.D.4.a.ii., the ST/WRF is expected to achieve removal rates on the high end of the reported range.

Copper. Water quality data show a maximum background copper concentration of 1 ug/L in the San Joaquin River, which exceeds the most stringent criterion of 0.84 ug/L (at a hardness of 6 mg/L as $CaCO_3$). Discharges from the ST/WRF are projected to reduce the toxicity of the background condition, as the effluent would increase the hardness, which in turn increases the copper criterion. If the actual background copper concentration was at or below the most stringent criterion, the ST/WRF discharge could potentially use more than 10 percent of the available assimilative capacity.

Silver. Silver was not detected in the San Joaquin River at Friant Dam. The maximum detection limit was 0.1 ug/L, which exceeds the most stringent criterion of 0.032 ug/L (at a hardness of 6 mg/L as $CaCO_3$). If the background is assumed equal to the maximum detection limit, discharges from the ST/WRF are projected to reduce the toxicity of the background condition, as the effluent would increase the hardness, which in turn increases the copper criterion. If the actual background copper concentration was at or below the most stringent criterion, the ST/WRF discharge could potentially use more than 10 percent of the available assimilative capacity.

Zinc. Water quality data indicate show that there is assimilative capacity for zinc in the San Joaquin River. The ST/WRF was estimated to use up to 35 percent of the assimilative capacity under Phase I discharge conditions and 29 percent of the assimilative capacity under Phase II.

iv. **Salinity Assessment.**

See Fact Sheet, Section IV.C.3.g.

b. **Groundwater Impacts.** Constituents of concern that have the potential to cause groundwater degradation include salts and nutrients. The following paragraphs evaluate the potential impacts to groundwater at various discharge points.

Wastewater and solids handling at the ST/WRF will be fully contained in engineered treatment works. Treated wastewater will be stored in bolted steel tanks for use as recycled water. As such, there will be no degradation of groundwater due to leachate from treatment and storage facilities at the ST/WRF.

The Discharger proposes to produce, distribute and use the recycled water pursuant to its Title 22 engineering report, as approved by DPH. Expected recycled water use sites are in developed areas within the City of Clovis' sphere of influence with the exception of Fresno State agricultural fields. Groundwater underlying these developed areas is used for municipal and domestic supply. Its use on salt sensitive crops is very limited, and this use is unlikely to remain due to impending development. Both initial and long-term ST/WRF effluent quality is expected to meet secondary MCLs for TDS (500 mg/L) and EC (900 umhos/cm). Long-term ST/WRF effluent quality is expected to meet the agricultural water quality goal of 700 umhos/cm. The use of recycled water shall be limited to reasonable agronomic rates designed to minimize the percolation of recycled water below the root zone. Because recycled water will be of high quality and applied at reasonable agronomic rates, degradation of groundwater should not occur from other than TDS and specific conductivity, and this will be no greater than from use of the groundwater as the water supply. Water quality objectives will not be exceeded and beneficial uses will be maintained.

TDS in groundwater in the vicinity of the Diversion Channel discharge averages approximately 400 mg/L (approximate EC equivalent is 615 umhos/cm). Initial discharges from the ST/WRF are expected to contain a TDS concentration around 500 mg/L. Sensitive agricultural uses do not exist on California Department of Water Resources land use maps and do not likely exist in the vicinity of the Diversion Channel or Little Dry Creek as much of the land is native vegetation, rural residential, or currently under development. Regardless, if there is any degradation from discharges to the Diversion Channel, it will be de minimis as the discharges to the channel will be limited in duration (i.e., only when FID is conducting maintenance activities), the expected long-term effluent concentration

will be approximately 400 mg/L, and freshwater will continue to infiltrate from the channel as well. Beneficial uses will be maintained.

The Discharger did not provide TDS data for the Fancher Creek area; however, concentrations are expected to be equal to or less than those measured near the Diversion Channel. On average, the discharge to Fancher Creek, when considered in conjunction with irrigation water (EC approximately 30-60 umhos/cm), should not cause groundwater to exceed the screening level for sensitive agricultural uses.

Nitrate data provided by the Discharger shows that groundwater in the vicinity of the Fancher Creek discharge (average concentration 15 mg/L as nitrogen) exceeds the water quality objective (10 mg/L as nitrogen). Average nitrate concentrations in the vicinity of the Diversion Channel discharge are 8 mg/L as nitrogen. ST/WRF discharges will not cause or contribute to an exceedance of the nitrate objective for the following reasons: the plant is designed to treat total nitrogen to concentrations less than 8 mg/L, this Order contains a total nitrogen effluent limitation of 10 mg/L, and the permit will require the recycled water to be applied at agronomic rates based on nitrogen consumption.

c. **Description of Alternative Control Measures**. The Discharger considered several alternatives to reduce or eliminate the lowering of water quality expected from the discharge of 5.6 MGD from the new ST/WRF. The alternatives and estimated costs (above capital costs for the proposed project) for the alternatives considered by the Discharger in the AAR are summarized below:

   i. Higher level of treatment ($15-$24 million);

   ii. Zero discharge (100% use of recycled water) of plant capacity (>$40 million);

   iii. Further changes in drinking water source (not feasible at this time);

   iv. Continued regionalization (cost prohibitive and infeasible); and,

   v. No project alternative.

d. **Antidegradation Conclusions.** The discharge, as authorized by this Order, satisfies essential elements of antidegradation policies based on the following:

   i. The lowering of water quality is not mitigable through reasonable means;

   ii. The lowering of water quality will not unreasonably affect actual or potential beneficial uses;

   iii. The lowering of water quality will not result in exceedance of any water quality objective;

   iv. The discharge causing the lowering of water quality will be subjected to best practicable treatment or control as the Discharger has evaluated treatability,

treatment and controls applied by others in similar situations, available technologies, and water quality policies and: (1) secured an alternative surface water supply, (2) will be adhering to an approved industrial pretreatment program, (3) will implement a salt minimization program within the pretreatment program, (4) will have to meet Tulare Lake Basin Plan EC effluent limitations of 500 umhos/cm over source water or 1000 umhos/cm, whichever is more stringent, (5) will denitrify to a total nitrogen concentration less than 10 mg/L, (6) will implement disinfected tertiary treatment, (7) will implement UV disinfection, (8) will store wastewater in steel tanks, and (9) will be required to apply wastewater at agronomic rates; and thus made a best effort to minimize the lowering of water quality.

v. The lowering of water quality is necessary for important social and economic growth (note: A socioeconomic evaluation was performed in the AAR) consistent with maximum public benefit for the following reasons:

- The ST/WRF will meet critical infrastructure needs and provide utility service for future population and economic growth;
- Recycled water use will supplement local water supply for non-potable urban use in a water short region and help reduce the groundwater overdraft condition in the Fresno/Clovis area;

The ST/WRF is the best means of meeting social and economic needs of the area consistent with water quality policies.

E. Interim Effluent Limitations - Not Applicable

This is a new discharge.

F. Land Discharge Specifications - Not Applicable

G. Reclamation Specifications

Title 22, CCR requires disinfected tertiary recycled water for spray irrigation of food crops, parks, playgrounds, unrestricted access golf courses, and other areas of similar public access. As the recycled water produced at the ST/WRF will be used to irrigate unrestricted access public space, disinfected tertiary treatment is required pursuant to Title 22, CCR and has been proposed. This Order contains reclamation specifications pursuant to Title 22, CCR.

Title 22, CCR, Section 60323(a) states that no person shall produce or supply recycled water for direct reuse from a proposed reclamation plant unless an engineering report is submitted for review and approval by DPH. The Discharger submitted two Title 22 engineering reports, *City of Clovis ST/WRF Engineering Report for the Production, Distribution, and Use of Recycled Water*, and *City-wide Engineering Report for the Production, Distribution, and Use of Recycled Water* to the DPH for review and approval. DPH conditionally approved the engineering reports on 28 November 2007.

The reclamation specifications also include various requirements for the recycled water use areas to protect public health. Included in the reclamation specifications are criteria contained in Title 22, CCR, Section 60310 and DPH "Guidelines for the Use of Reclaimed Water" incorporated by reference in the Tulare Lake Basin Plan.

1. **BOD, TSS, Settleable Solids**. This Order establishes effluent limitations for BOD, TSS, and settleable solids that are technically based on the capability of a tertiary system, consistent with requirements established for other tertiary treatment systems, and consistent with the "best practicable treatment or control" provision of State Water Board Resolution 68-16.

2. **Total Coliform and Turbidity**. DPH promulgated water recycling criteria in Title 22, CCR, Division 4, Chapter 3, to ensure reuse of wastewater does not pose an unacceptable health risk in various use situations. Title 22 requires that for sprinkler irrigation of food crops, parks, playgrounds, schoolyards, and other areas of similar public access, recycled water must be adequately disinfected, oxidized, coagulated (under certain circumstances), clarified, and filtered, and that the effluent total coliform levels not exceed 2.2 MPN/100 mL as a 7-day median, not exceed 23 MPN/100 mL in more than one sample in any 30-day period, and never exceed 240 MPN/100 mL (disinfected tertiary treatment).

   Title 22, CCR, Section 60301.320(b) contains filtration requirements for membrane systems. These requirements specify that the turbidity of the effluent, after it has passed through microfiltration, shall not exceed 0.2 NTU more than 5 percent of the time within a 24-hour period and 0.5 NTU at any time. This Order incorporates filtration requirements consistent with Title 22, CCR, Section 60301.320(b).

3. **Total Nitrogen**. See Fact Sheet, Section IV.B.2.b.

4. **pH**. A portion of the recycled water applied to the recycled water use areas is expected to percolate to groundwater. The Tulare Lake Basin Plan includes a water quality objective for groundwater that "[g]*round waters shall not contain taste or odor-producing substances in concentrations that cause nuisance or adversely affect beneficial uses*." USEPA has a Secondary Maximum Contaminant Level (or Secondary Standard) for drinking water pH of 6.5 to 8.5 units. The noticeable effects of pH outside of the Secondary Standard range include (a) for a low pH: bitter metallic taste; corrosion and (b) for a high pH: slippery feel; soda taste; deposits [USEPA, Secondary Drinking Water Regulations: Guidance for Nuisance Chemicals, http://www.epa.gov/safewater]. A pH limitation range of 6.5 to 8.5 helps to ensure that the Discharger's wastewater treatment activities do not cause the groundwater taste and odor objective to be violated. Potential corrosion and deposits caused by a pH outside of the 6.5 to 8.5 range would adversely affect the beneficial use of industrial service supply and may disrupt the ability of bacteria to effectively break down certain wastewater constituents. In addition, low pH values cause metals to dissolve, allowing them to percolate into groundwater in concentrations that may affect beneficial uses.

5. **Salinity**. The Tulare Lake Basin Plan requires that the incremental increase in salts must be controlled to the extent possible and states, "*The maximum EC shall not exceed the EC of the source water plus 500 micromhos/cm*." The Tulare Lake Basin Plan also states that discharges to areas that may recharge good quality groundwater shall not exceed an EC of 1,000 µmhos/cm. This Order requires that the average EC of the discharge shall not exceed the flow-weighted average EC of the source water plus 500 µmhos/cm or a maximum of 1,000 µmhos/cm, whichever is most stringent. When source water is from more than one source, the EC shall be a flow-weighted average of all sources.

H. Flow Specifications

The ST/WRF is designed to provide a tertiary level of treatment for up to a design flow of 2.8 MGD as an annual average and 3.1 MGD as a maximum monthly average for Phase I. For Phase II, the ST/WRF design flows will be 5.6 MGD as an annual average and 6.2 MGD as a maximum monthly average. Therefore, this Order contains flow specifications consistent with the design flows.

V. RATIONALE FOR RECEIVING WATER LIMITATIONS

Basin Plan water quality objectives to protect the beneficial uses of surface water and groundwater include numeric objectives and narrative objectives, including objectives for chemical constituents, toxicity, and tastes and odors. The toxicity objective requires that surface water and groundwater be maintained free of toxic substances in concentrations that produce detrimental physiological responses in humans, plants, animals, or aquatic life. The chemical constituent objective requires that surface water and groundwater shall not contain chemical constituents in concentrations that adversely affect any beneficial use or that exceed the maximum contaminant levels (MCLs) in Title 22, CCR. The tastes and odors objective states that surface water and groundwater shall not contain taste- or odor-producing substances in concentrations that cause nuisance or adversely affect beneficial uses. The Basin Plans require the application of the most stringent objective necessary to ensure that surface water and groundwater do not contain chemical constituents, toxic substances, radionuclides, or taste and odor producing substances in concentrations that adversely affect domestic drinking water supply, agricultural supply, or any other beneficial use.

A. Surface Water

1. CWA section 303(a-c), requires states to adopt water quality standards, including criteria where they are necessary to protect beneficial uses. The Regional Water Board adopted water quality criteria as water quality objectives in the Basin Plans. The Basin Plans state that "*[t]he numerical and narrative water quality objectives define the least stringent standards that the Regional Board will apply to regional waters in order to protect the beneficial uses*." The Basin Plans include numeric and narrative water quality objectives for various beneficial uses and water bodies. This Order contains Receiving Surface Water Limitations based directly on the Tulare Lake and Sacramento-San Joaquin Rivers Basin Plans numerical and narrative water quality objectives for biostimulatory substances, chemical constituents, color,

dissolved oxygen, floating material, oil and grease, pH, pesticides, radioactivity, sediment, settleable material, suspended material, tastes and odors, temperature, toxicity, and turbidity.

Numeric Basin Plan objectives for un-ionized ammonia, bacteria, dissolved oxygen, pH, temperature, and turbidity are applicable to this discharge and have been incorporated as Receiving Surface Water Limitations. Rationale for these narrative and numeric receiving surface water limitations are as follows:

a. **Ammonia.** The Tulare Lake Basin Plan states that, "[w]*aters shall not contain un-ionized ammonia in amounts which adversely affect beneficial uses. In no case shall the discharge of wastes cause concentrations of un-ionized ammonia (NH_3) to exceed 0.025 mg/l (as N) in receiving waters.*" This Order contains a receiving water limit for ammonia for discharges to Fancher Creek and the Diversion Channel based on this objective.

b. **Bacteria.** The Sacramento-San Joaquin Rivers Basin Plan includes a water quality objective that states "*[I]n water designated for contact recreation (REC-1), the fecal coliform concentration based on a minimum of not less than five samples for any 30-day period shall not exceed a geometric mean of 200/100 ml, nor shall more than ten percent of the total number of samples taken during any 30-day period exceed 400/100 ml*." The Tulare Lake Basin Plan includes a water quality objective that states *"[I]n waters designated REC-1, the fecal coliform concentration based on a minimum of not less than five samples for any 30-day period shall not exceed a geometric mean of 200/100 ml, nor shall more than ten percent of the total number of samples taken during any 30-day period exceed 400/100 ml."*

c. **Biostimulatory Substances**. The Sacramento-San Joaquin Rivers Basin Plan includes a water quality objective that states "*[W]ater shall not contain biostimulatory substances which promote aquatic growths in concentrations that cause nuisance or adversely affect beneficial uses."* The Tulare Lake Basin Plan states that "*[W]ater shall not contain biostimulatory substances that promote aquatic growths to the extent such growths cause nuisance or adversely affect beneficial uses."*

d. **Color**. The Basin Plans include a water quality objective that "*[W]ater shall be free of discoloration that causes nuisance or adversely affects beneficial uses."*

e. **Chemical Constituents**. The Basin Plans include a water quality objective that *"[W]aters shall not contain chemical constituents in concentrations that adversely affect beneficial uses."*

f. **Dissolved Oxygen.** Little Dry Creek has been designated as having the beneficial use of cold freshwater aquatic habitat (COLD). For water bodies designated as having COLD as a beneficial use, the Sacramento-San Joaquin Rivers Basin Plan includes a water quality objective of maintaining a minimum of 7.0 mg/L of dissolved oxygen. Since the beneficial use of COLD does apply to

the Little Dry Creek because it is tributary to the San Joaquin River, a receiving water limitation of 7.0 mg/L for dissolved oxygen was included in this Order. Fancher Creek has been designated as having the beneficial use of Warm Freshwater Habitat (WARM) and WARM is applicable to the Diversion Channel. For waterbodies designated as having WARM as a beneficial use, the Tulare Lake Basin Plan includes a water quality objective of maintaining a minimum of 5.0 mg/l of dissolved oxygen. Since WARM applies to Fancher Creek and the Diversion Channel, a receiving water limitation of 5.0 mg/L for dissolved oxygen is included in this Order.

For surface water bodies outside of the Delta, the Basin Plans include the water quality objective that "…*the monthly median of the mean daily dissolved oxygen (DO) concentration shall not fall below 85 percent of saturation in the main water mass, and the 95 percentile concentration shall not fall below 75 percent of saturation.*"

g. **Floating Material**. The Sacramento-San Joaquin Rivers Basin Plan includes a water quality objective that *"[W]ater shall not contain floating material in amounts that cause nuisance or adversely affect beneficial uses."* The Tulare Lake Basin Plan includes a water quality objective *"[W]aters shall not contain floating material, including but not limited to solids, liquids, foams, and scum, in concentrations that cause nuisance or adversely affect beneficial uses."*

h. **Oil and Grease**. The Basin Plans include a water quality objective that *"[W]aters shall not contain oils, greases, waxes, or other materials in concentrations that cause nuisance, result in a visible film or coating on the surface of the water or on objects in the water, or otherwise adversely affect beneficial uses."*

i. **pH.** The Sacramento-San Joaquin Rivers Basin Plan includes water quality objective that *"[T]he pH shall not be depressed below 6.5 nor raised above 8.5."* The Tulare Lake Basin Plan includes a water quality objective that pH not be depressed below 6.5 or raised above 8.3.

j. **Pesticides**. The Sacramento-San Joaquin Rivers Basin Plan includes a water quality objective for pesticides beginning on page III-6.00, and the Tulare Lake Basin Plan includes a water quality objective for pesticides beginning on page III-3.

k. **Radioactivity**. The Basin Plans include a water quality objective that *"[R]adionuclides shall not be present in concentrations that are harmful to human, plant, animal or aquatic life nor that result in the accumulation of radionuclides in the food web to an extent that presents a hazard to human, plant, animal or aquatic life."* The Basin Plans state further that *"[A]t a minimum, waters designated for use as domestic or municipal supply (MUN) shall not contain concentrations of radionuclides in excess of the maximum contaminant levels (MCLs) specified in Table 4 (MCL Radioactivity) of Section 64443 of Title 22 of the California Code of Regulations…"*

l. **Sediment.** The Basin Plans include a water quality objective that *"[T]he suspended sediment load and suspended sediment discharge rate of surface waters shall not be altered in such a manner as to cause nuisance or adversely affect beneficial uses"*

m. **Settleable Material.** The Basin Plans include a water quality objective that *"[W]aters shall not contain substances in concentrations that result in the deposition of material that causes nuisance or adversely affects beneficial uses."*

n. **Suspended Material.** The Basin Plans include a water quality objective that *"[W]aters shall not contain suspended material in concentrations that cause nuisance or adversely affect beneficial uses."*

o. **Taste and Odors**. The Sacramento-San Joaquin Rivers Basin Plan includes a water quality objective that *"[W]ater shall not contain taste- or odor-producing substances in concentrations that impart undesirable tastes or odors to domestic or municipal water supplies or to fish flesh or other edible products of aquatic origin, or that cause nuisance, or otherwise adversely affect beneficial uses."* The Tulare Lake Basin Plan includes a water quality objective that *"[W]aters shall not contain taste- or odor-producing substances in concentrations that cause nuisance, adversely affect beneficial uses, or impart undesirable tastes or odors to fish flesh or other edible products of aquatic origin or to domestic or municipal water supplies."*

p. **Temperature.** Little Dry Creek has the beneficial uses of both COLD and WARM. The Sacramento-San Joaquin Rivers Basin Plan includes the objective that "[a]*t no time or place shall the temperature of COLD or WARM intrastate waters be increased more than 5ºF above natural receiving water temperature*." Fancher Creek and the Diversion Channel have the beneficial use of WARM. The Tulare Lake Basin Plan includes a water quality objective that "[e]*levated temperature wastes shall not cause the temperature of waters designated COLD or WARM to increase by more than 5º*F above natural receiving water temperature."

q. **Toxicity**. The Basin Plans include a water quality objective that *"[A]ll waters shall be maintained free of toxic substances in concentrations that produce detrimental physiological responses in human, plant, animal, or aquatic life."*

r. **Turbidity.** The Basin Plans include a water quality objective that "*[I]ncreases in turbidity attributable to controllable water quality factors shall not exceed the following limits:*

- *Where natural turbidity is between 0 and 5 Nephelometric Turbidity Units (NTUs), increases shall not exceed 1 NTU.*

- *Where natural turbidity is between 5 and 50 NTUs, increases shall not exceed 20 percent.*

- *Where natural turbidity is between 50 and 100 NTUs, increases shall not exceed 10 NTUs.*

- *Where natural turbidity is greater than 100 NTUs, increases shall not exceed 10 percent*."

B. Groundwater

1. The beneficial uses of groundwater underlying areas potentially affected by the discharge are municipal and domestic supply, industrial service supply, industrial process supply, contact and non-contact water recreation, and agricultural supply.

2. Tulare Lake Basin Plan water quality objectives include narrative objectives for chemical constituents, tastes and odors, and toxicity of groundwater. The toxicity objective requires that groundwater be maintained free of toxic substances in concentrations that produce detrimental physiological responses in humans, plants, animals, or aquatic life. The chemical constituent objective states groundwater shall not contain chemical constituents in concentrations that adversely affect any beneficial use. The tastes and odors objective prohibits taste- or odor-producing substances in concentrations that cause nuisance or adversely affect beneficial uses. The Tulare Lake Basin Plan also establishes numerical water quality objectives for chemical constituents and radioactivity in groundwaters designated as municipal supply. These include, at a minimum, compliance with MCLs in Title 22 of the CCR. The bacteria objective prohibits coliform organisms at or above 2.2 MPN/100 ml. The Tulare Lake Basin Plan requires the application of the most stringent objective necessary to ensure that waters do not contain chemical constituents, toxic substances, radionuclides, taste- or odor-producing substances, or bacteria in concentrations that adversely affect municipal or domestic supply, agricultural supply, industrial supply or some other beneficial use.

3. Groundwater limitations that reflect the water quality objectives will protect the beneficial uses of the underlying groundwater.

VI. RATIONALE FOR MONITORING AND REPORTING REQUIREMENTS

40 CFR section 122.48 requires that all NPDES permits specify requirements for recording and reporting monitoring results. CWC Sections 13267 and 13383 authorize the Regional Water Board to require technical and monitoring reports. The Monitoring and Reporting Program (MRP), Attachment E of this Order, establishes monitoring and reporting requirements to implement federal and state requirements. The following provides the rationale for the monitoring and reporting requirements contained in the MRP for this facility.

A. Influent Monitoring

1. Influent monitoring is required to collect data on the characteristics of the raw wastewater and to assess compliance with effluent limitations (*e.g.*, BOD and TSS reduction requirements).

B. Effluent Monitoring

1. Pursuant to the requirements of 40 CFR 122.44(i)(2) effluent monitoring is required for all constituents with effluent limitations. Effluent monitoring is necessary to assess compliance with effluent limitations, assess the effectiveness of the treatment process, and to ensure the discharge is not the cause of unreasonable impacts on the receiving stream and groundwater.

2. Priority pollutant monitoring is required by Section 1.3 of the SIP to determine whether the discharge may cause, have a reasonable potential to cause, or contribute to an excursion above any applicable priority pollutant criterion or objective.

3. This Order includes monitoring of dioxin and congeners because congeners were detected in more than one sample collected from the Fowler wastewater trunk line in May 2005.

4. As effluent hardness affects the toxicity of certain metals, this Order requires effluent hardness monitoring.

C. Whole Effluent Toxicity Testing Requirements

1. **Acute Toxicity.** Quarterly 96-hour bioassay testing is required to demonstrate compliance with the effluent limitation for acute toxicity.

2. **Chronic Toxicity.** Quarterly chronic whole effluent toxicity testing is required in order to demonstrate compliance with the Basin Plans' narrative toxicity objective.

D. Receiving Water Monitoring

1. **Surface Water**

   a. Receiving water monitoring is necessary to assess compliance with receiving water limitations and to assess the impacts of the discharge on the receiving watercourses.

2. **Reclamation Monitoring Requirements**

   a. Reclamation monitoring is necessary to assess compliance with the disinfected tertiary recycled water limitations, as is required by Title 22, CCR.

E. Other Monitoring Requirements

1. **Biosolids Monitoring**

   Biosolids monitoring is required to ensure compliance with the biosolids disposal requirements (Special Provisions VI.C.5.b. and c.). Biosolids disposal requirements

are imposed pursuant to 40 CFR part 503 to protect public health and prevent groundwater degradation.

2. **Water Supply Monitoring**

Water supply monitoring is required to demonstrate compliance with Effluent Limitations and Reclamation Specifications as well as to quantify the constituents before use.

VII. RATIONALE FOR PROVISIONS

A. Standard Provisions

Standard Provisions, which apply to all NPDES permits in accordance with 40 CFR section 122.41, and additional conditions applicable to specified categories of permits in accordance with 40 CFR section 122.42, are provided in Attachment D. The discharger must comply with all standard provisions and with those additional conditions that are applicable under 40 CFR section 122.42.

40 CFR section 122.41(a)(1) and (b) through (n) establish conditions that apply to all State-issued NPDES permits. These conditions must be incorporated into the permits either expressly or by reference. If incorporated by reference, a specific citation to the regulations must be included in the Order. 40 CFR section 123.25(a)(12) allows the state to omit or modify conditions to impose more stringent requirements. In accordance with 40 CFR section 123.25, this Order omits federal conditions that address enforcement authority specified in 40 CFR sections 122.41(j)(5) and (k)(2) because the enforcement authority under the Water Code is more stringent. In lieu of these conditions, this Order incorporates by reference CWC Section 13387(e).

B. Special Provisions

1. Reopener Provisions

a. **Whole Effluent Toxicity.** This Order requires the Discharger to investigate the causes of, and identify corrective actions to reduce or eliminate effluent toxicity through a Toxicity Reduction Evaluation (TRE). This Order may be reopened to include a numeric chronic toxicity limitation, a new acute toxicity limitation, and/or a limitation for a specific toxicant identified in the TRE. Additionally, if a numeric chronic toxicity water quality objective is adopted by the State Water Board, this Order may be reopened to include a numeric chronic toxicity limitation based on that objective.

b. **Water Effects Ratio (WER) and Metal Translators.** A default WER of 1.0 has been used in this Order for calculating CTR criteria for applicable priority pollutant inorganic constituents. If the Discharger performs studies to determine site-specific WERs and/or site-specific dissolved-to-total metal translators, this

Order may be reopened to modify subsequently adopted effluent limitations for the applicable inorganic constituents.

c. **Mercury.** The Regional Water Board is currently in the process of developing a TMDL for mercury in the Delta. Should the adopted TMDL require wasteload allocations for mercury for discharges to the San Joaquin River, this Order may be reopened to allow the Regional Water Board to adopt new limitations for mercury in order to implement the adopted wasteload allocations.

d. **Disinfection Byproducts Study.** This Order requires the Discharger to conduct a special study to determine if disinfection byproducts (DBPs) are present in the tertiary treated effluent that is to be discharged from the ST/WRF. The Discharger does not intend to use chlorine for disinfection of the tertiary treated wastewater; Ultraviolet light will be used. However, sodium hypochlorite (a chlorine compound) will be used periodically to clean the membranes in the wastewater treatment process. After the membranes are cleaned with the sodium hypochlorite solution, the cleaning solution will be cycled back to the headworks of the facility. The chlorine is not expected to survive the high organic-rich primary and secondary treatment process. However, because chlorine and DBPs are a concern for receiving water quality, this Order requires the Discharger to conduct a special study during the first year of operation of the ST/WRF to determine if chlorine and DBPs are present in the effluent. If DBPs are present in the effluent, this Order may be reopened to include numeric effluent limitations for DBPs.

e. **Priority Pollutant Evaluation.** Because this is a new discharger, this Order requires that the Discharger conduct a Priority Pollutant Evaluation prior to the expiration of this Order. Based on the priority pollutant evaluation, the Regional Water Board may reopen this Order if the Regional Water Board finds reasonable potential based on the priority pollutant evaluation.

f. **Salinity Evaluation and Minimization Plan**. This Order requires that the Discharger prepare and implement a salinity evaluation and minimization plan to address sources of salinity from the municipal wastewater treatment system. Based on a review of the results of implementation of the salinity evaluation and minimization plan this Order may be reopened for addition and/or modification of effluent limitations and requirements for salinity.

2. Special Studies and Additional Monitoring Requirements

a. **Chronic Whole Effluent Toxicity Requirements.** The Basin Plans contain a narrative toxicity objective that states, "*All waters shall be maintained free of toxic substances in concentrations that produce detrimental physiological responses in human, plant, animal, or aquatic life*." (Sacramento-San Joaquin Rivers Basin Plan at III-8.01 and Tulare Lake Basin Plan at III-6.) Adequate WET data is not available to determine if the discharge has reasonable potential to cause or contribute to an in-stream excursion above of the Basin Plans' narrative toxicity

objective. Attachment E of this Order requires quarterly chronic WET monitoring for demonstration of compliance with the narrative toxicity objective.

In addition to WET monitoring, this provision requires the Discharger to submit to the Regional Water Board an Initial Investigative TRE Work Plan for approval by the Executive Officer, to ensure the Discharger has a plan to immediately move forward with the initial tiers of a TRE, in the event effluent toxicity is encountered in the future. The provision also includes a numeric toxicity monitoring trigger and requirements for accelerated monitoring, as well as, requirements for TRE initiation if a pattern of toxicity is demonstrated.

Monitoring Trigger. A numeric toxicity monitoring trigger of > 1 TUc (where TUc = 100/NOEC) is applied in the provision, because this Order does not allow any dilution for the chronic condition. Therefore, a TRE is triggered when the effluent exhibits a pattern of toxicity at 100% effluent.

Accelerated Monitoring. The provision requires accelerated WET testing when a regular WET test result exceeds the monitoring trigger. The purpose of accelerated monitoring is to determine, in an expedient manner, whether there is a pattern of toxicity before requiring the implementation of a TRE. Due to possible seasonality of the toxicity, the accelerated monitoring should be performed in a timely manner, preferably taking no more than 2 to 3 months to complete.

The provision requires accelerated monitoring consisting of four (4) chronic toxicity tests in a six-week period (i.e., one test every two weeks) using the species that exhibited toxicity. Guidance regarding accelerated monitoring and TRE initiation is provided in the *Technical Support Document for Water Quality-based Toxics Control, EPA/505/2-90-001, March 1991* (TSD). The TSD at page 118 states, "EPA recommends if toxicity is repeatedly or periodically present at levels above effluent limits more than 20 percent of the time, a TRE should be required." Therefore, four accelerated monitoring tests are required in this provision. If no toxicity is demonstrated in the four accelerated tests, then it demonstrates that toxicity is not present at levels above the monitoring trigger more than 20 percent of the time (only 1 of 5 tests are toxic, including the initial test). However, notwithstanding the accelerated monitoring results, if there is adequate evidence of a pattern of effluent toxicity (i.e. toxicity present exceeding the monitoring trigger more than 20 percent of the time), the Executive Officer may require that the Discharger initiate a TRE.

See the WET Accelerated Monitoring Flow Chart (Figure F-1), below, for further clarification of the accelerated monitoring requirements and for the decision points for determining the need for TRE initiation.

TRE Guidance. The Discharger is required to prepare a TRE Work Plan in accordance with USEPA guidance. Numerous guidance documents are available, as identified below:

- *Toxicity Reduction Evaluation Guidance for Municipal Wastewater Treatment Plants,* (EPA/833B-99/002), August 1999.

- Generalized Methodology for Conducting Industrial TREs*, (EPA/600/2-88/070), April 1989.*

- *Methods for Aquatic Toxicity Identification Evaluations: Phase I Toxicity Characterization Procedures,* Second Edition, EPA 600/6-91/005F, February 1991.

- *Toxicity Identification Evaluation: Characterization of Chronically Toxic Effluents, Phase I*, EPA 600/6-91/005F, May 1992.

- *Methods for Aquatic Toxicity Identification Evaluations: Phase II Toxicity Identification Procedures for Samples Exhibiting acute and Chronic Toxicity,* Second Edition, EPA 600/R-92/080, September 1993.

- *Methods for Aquatic Toxicity Identification Evaluations: Phase III Toxicity Confirmation Procedures for Samples Exhibiting Acute and Chronic Toxicity*, Second Edition, EPA 600/R-92/081, September 1993.

- *Methods for Measuring the Acute Toxicity of Effluents and Receiving Waters to Freshwater and Marine Organisms*, Fifth Edition, EPA-821-R-02-012, October 2002.

- *Short-term Methods for Estimating the Chronic Toxicity of Effluents and Receiving Waters to Freshwater Organisms*, Fourth Edition, EPA-821-R-02-013, October 2002.

- *Technical Support Document for Water Quality-based Toxics Control, EPA/505/2-90-001, March 1991*

Figure F-1
WET Accelerated Monitoring Flow Chart

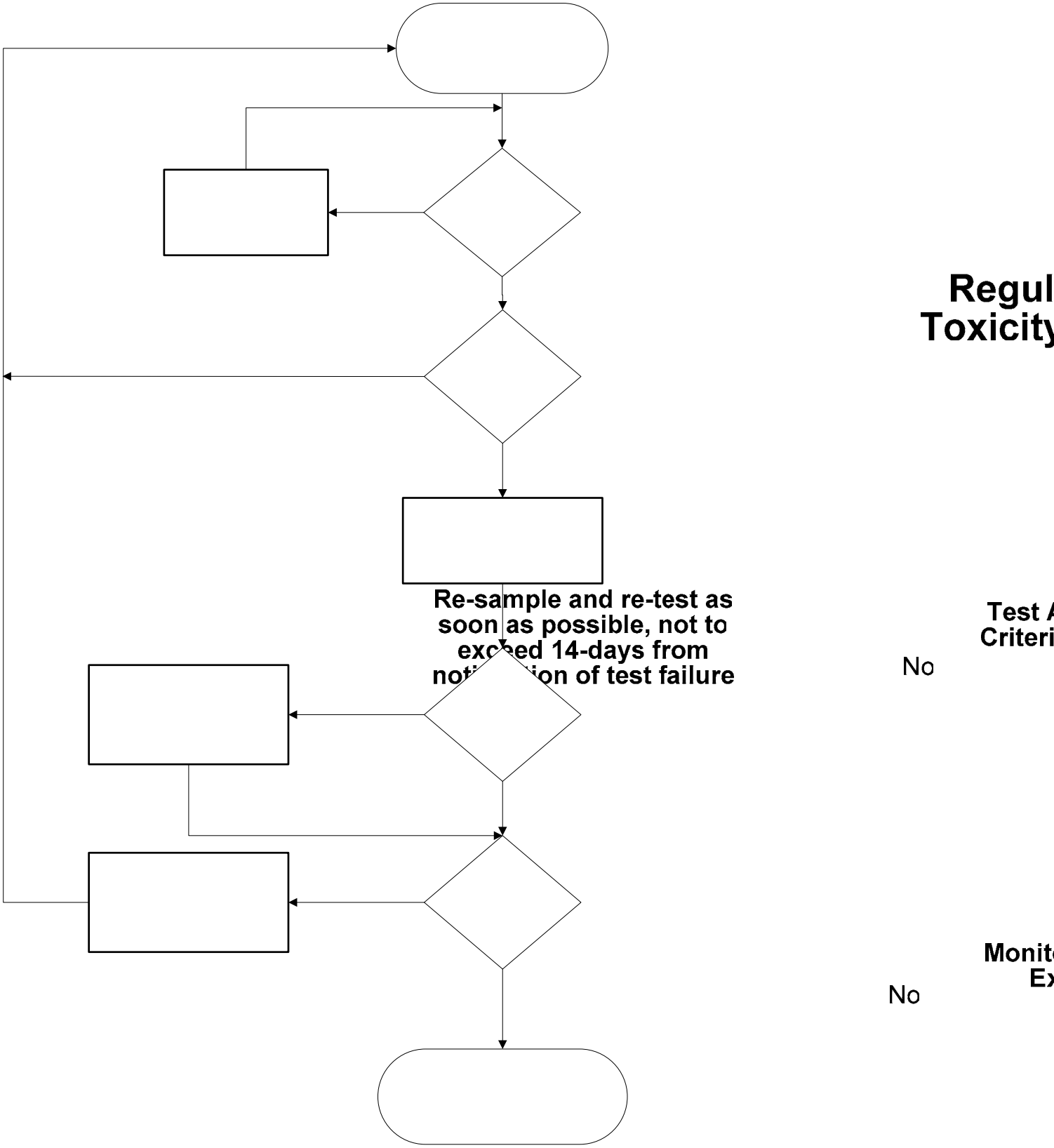

b. **Priority Pollutant Evaluation.** The State Implementation Policy requires a reasonable potential analysis (RPA) for CTR constituents to determine whether a discharge may: (1) cause, (2) have a reasonable potential to cause, or (3) contribute to an excursion above any applicable priority pollutant criterion or objective. For those constituents identified in the RPA as having a reasonable potential for exceeding objectives, an effluent limitation must be calculated in accordance with Section 1.4 of the State Implementation Policy. This Order requires the Discharger to conduct an RPA and to submit a technical report that proposes effluent limits for all CTR constituents that show reasonable potential to cause or contribute to an exceedance of a water quality objective in Little Dry Creek, the Diversion Channel, and/or Fancher Creek prior to expiration of this Order.

c. **Post-Construction Report.** Because this is a new facility that is still being built, this Order requires the Discharger to submit a post-construction report certifying that the ST/WRF was designed and constructed to operate in full compliance with the terms of this Order prior to discharge pursuant to provisions in this Order.

d. **Discharge Flow Expansion (Phase II Improvements).** Because the Discharger may expand its discharge capacity from 2.8 MGD to 5.6 MGD during the course of this permit term, this Order requires the Discharger to meet specified conditions before the discharge flow rate increases from 2.8 MGD to 5.6 MGD.

e. **Disinfection Byproducts Study.** Because the Discharger proposes to use sodium hypochlorite to periodically clean the membranes in the waste treatment process, this Order requires the Discharger to conduct a study to determine if disinfection byproducts may remain in the wastewater effluent.

3. Best Management Practices and Pollution Prevention

a. **Salinity Evaluation and Minimization Plan.** This Order requires the Discharger to prepare a salinity evaluation and minimization plan to ensure the Discharger continues to research, identify, and implement salt-reduction measures.

4. Construction, Operation, and Maintenance Specifications

a. **Ultraviolet Disinfection (UV) System.** UV system operation requirements are necessary to ensure that adequate UV dosage is applied to the wastewater to inactivate pathogens e.g. viruses in the wastewater. UV dosage is dependent on several factors such as UV transmittance, UV power setting, and wastewater flow through the UV System. Minimum dosage requirements are based on recommendations by the DPH and guidelines established by the National Water Research Institute (NWRI) and American Water Works Association Research Foundation NWRI/AWWARF's *"Ultraviolet Disinfection Guidelines for Drinking Water and Water Reuse"* first published in December 2000 revised as a Second Edition dated May 2003. Furthermore, a Memorandum dated November 1, 2004

issued by DPH to Regional Water Board executive officers recommended that provisions be included in permits for water recycling treatment plants employing UV disinfection requiring dischargers to establish fixed cleaning frequency of quartz sleeves as well as include provisions that specify minimum delivered UV dose that must be maintained (as recommended by the NWRI/AWWARF UV Disinfection Guidelines). Minimum UV dosage requirements specified in Effluent Limitations and Discharge Specifications Section VI.C.4.b ensures that adequate disinfection of wastewater will be achieved.

5. Special Provisions for Municipal Facilities (POTWs Only)

a. **Pretreatment Requirements.**

i. The Federal Clean Water Act, Section 307(b), and Federal Regulations, 40 CFR part 403, require publicly owned treatment works to develop an acceptable industrial pretreatment program. A pretreatment program is required to prevent the introduction of pollutants, which will interfere with treatment plant operations or sludge disposal, and prevent pass through of pollutants that exceed water quality objectives, standards or permit limitations. Pretreatment requirements are imposed pursuant to 40 CFR part 403.

ii. The Discharger shall continue to authorize the City of Fresno to implement and enforce its approved pretreatment program, which is an enforceable condition of this Order. If the Discharger fails to authorize the City of Fresno to perform the pretreatment functions, the Regional Water Board, the State Water Board or the USEPA may take enforcement actions against the Discharger as authorized by the CWA.

b. **Biosolids**. The use and disposal of biosolids is regulated under federal and State laws and regulations, including permitting requirements and technical standards included in 40 CFR part 503. The Discharger is required to comply with the standards and time schedules contained in 40 CFR part 503.

Title 27, CCR, Division 2, Subdivision 1, section 20005 regulates disposal of collected screenings, residual sludge, biosolids, and other solids removed from liquid wastes. This Order includes requirements to ensure the Discharger properly handles and disposes of solids.

c. **Collection System**. On May 2, 2006, the State Water Board adopted State Water Board Order 2006-0003, a Statewide General WDR for Sanitary Sewer Systems. The General Order requires public agencies that own or operate sanitary sewer systems with greater than one mile of pipes or sewer lines to enroll for coverage under the General Order. The Discharger applied for coverage on October 13, 2006 and was subsequently approved for coverage under State Water Board Order 2006-0003 for operation of its sanitary sewer collection system.

The Discharger's collection system is part of the wastewater collection, treatment, and disposal system. Pursuant to federal regulations, the Discharger must properly operate and maintain its collection system [40 CFR 122.41(e)], report any non-compliance [40 CFR 122.41(l)(6) and (7)], and mitigate any discharge from the collection system in violation of this Order [40 CFR section 122.41(d)].

The General Order contains requirements for operation and maintenance of collection systems and for reporting and mitigating sanitary sewer overflows. The General Order however, does not impose federal 24-hour reporting requirements. Accordingly, 24-hour reporting is required by the Order for overflow from the collection system that endangers the public health or environment. To avoid redundancy, all other matters of operation, maintenance, or notification that only concern the collection system will be regulated under the General Order. Pretreatment program requirements, excessive pollutant-free water, and other matters that may directly or indirectly affect the ST/WRF or receiving water shall be regulated by this Order.

6. Other Special Provisions

a. As the recycled water produced at the ST/WRF will be used to irrigate unrestricted access public space, the ST/WRF must produce disinfected tertiary recycled water pursuant to Title 22, CCR. Title 22, CCR requires disinfected tertiary recycled water be oxidized, coagulated (in some instances), filtered, and adequately disinfected. Title 22, CCR does not require coagulation for facilities such as the proposed ST/WRF that use microfiltration.

b. In the event of any change in control or ownership of land or waste discharge facilities presently owned or controlled by the Discharger, the Discharger shall notify the succeeding owner or operator of the existence of this Order by letter, a copy of which shall be immediately forwarded to the Regional Water Board.

   To assume operation under this Order, the succeeding owner or operator must apply in writing to the Executive Officer requesting transfer of the Order. The request must contain the requesting entity's full legal name, the State of incorporation if a corporation, address and telephone number of the persons responsible for contact with the Regional Water Board and a statement. The statement shall comply with the signatory and certification requirements in Standard Provisions (Attachment D, Section V.B.) and state that the new owner or operator assumes full responsibility for compliance with this Order. Failure to submit the request shall be considered a discharge without requirements, a violation of the California Water Code. Transfer shall be approved or disapproved in writing by the Executive Officer.

7. Compliance Schedules – Not applicable

8. Master Reclamation Permit Provisions

The master reclamation permit provisions are included in this Order to ensure compliance with CWC Section 13523.1 (see Fact Sheet, Section III.C.2.).

VIII. PUBLIC PARTICIPATION

The California Regional Water Quality Control Board, Central Valley Region (Regional Water Board) is considering the issuance of waste discharge requirements (WDRs) that will serve as a National Pollutant Discharge Elimination System (NPDES) permit for the City of Clovis Sewage Treatment and Water Reuse Facility. As a step in the WDR adoption process, the Regional Water Board staff has developed and circulated for comment tentative WDRs. The Regional Water Board encourages public participation in the WDR adoption process.

A. Notification of Interested Parties

The Regional Water Board notified the Discharger and interested agencies and persons of its intent to prescribe waste discharge requirements for the discharge and provided them with an opportunity to submit their written comments and recommendations on tentative WDRs. Notification was provided through the following: direct mailing to agencies and known interested parties; posting of a Notice of Public Hearing at the ST/WRF entrance, local post office, Clovis City Hall, and the Regional Water Board's web site; and publication in the Fresno Bee on 24 December 2007.

B. Written Comments

The staff determinations of appropriate requirements are tentative when circulated and posted for comment. Interested persons are invited to submit written comments concerning these tentative WDRs in person or by mail to the Regional Water Board at the following address:

Regional Water Quality Control Board
1685 "E" Street
Fresno, CA 93706

To be fully responded to by staff and considered by the Regional Water Board, written comments should be received at the Regional Water Board offices by noon on **25 January 2008.**

Comments can also be emailed to Matt Scroggins at mscroggins@waterboards.ca.gov, and if emailed, a printed and signed copy must be mailed and postmarked by noon on **25 January 2008**.

C. Public Hearing

The Regional Water Board will hold a public hearing on the tentative WDRs during its regular Board meeting on the following date and time and at the following location:

Date: **13/14 March 2008**
Time: 8:30 am
Location: Regional Water Quality Control Board, Central Valley Region
11020 Sun Center Dr., Suite #200
Rancho Cordova, CA 95670

Interested persons are invited to attend. At the public hearing, the Regional Water Board will hear testimony, if any, pertinent to the discharge, WDRs, and permit. Oral testimony will be heard; however, for accuracy of the record, important testimony should be in writing.

Please be aware that dates and venues may change. Our Web address is http://www.waterboards.ca.gov/rwqcb5/ where you can access the current agenda for changes in dates and locations.

D. Waste Discharge Requirements Petitions

Any aggrieved person may petition the State Water Resources Control Board to review the decision of the Regional Water Board regarding the final WDRs. The petition must be submitted within 30 days of the Regional Water Board's action to the following address:

State Water Resources Control Board
Office of Chief Counsel
P.O. Box 100, 1001 I Street
Sacramento, CA 95812-0100

E. Information and Copying

The Report of Waste Discharge (RWD), related documents, tentative effluent limitations and special provisions, comments received, and other information are on file and may be inspected at the Fresno address above at any time between 8:30 a.m. and 5:00 p.m., Monday through Friday. Copying of documents may be arranged through the Regional Water Board by calling (559) 445-5116.

F. Register of Interested Persons

Any person interested in being placed on the mailing list for information regarding the WDRs and NPDES permit should contact the Regional Water Board, reference this facility, and provide a name, address, and phone number.

G. Additional Information

Requests for additional information or questions regarding this order should be directed to Matt Scroggins at (559) 445-6042.
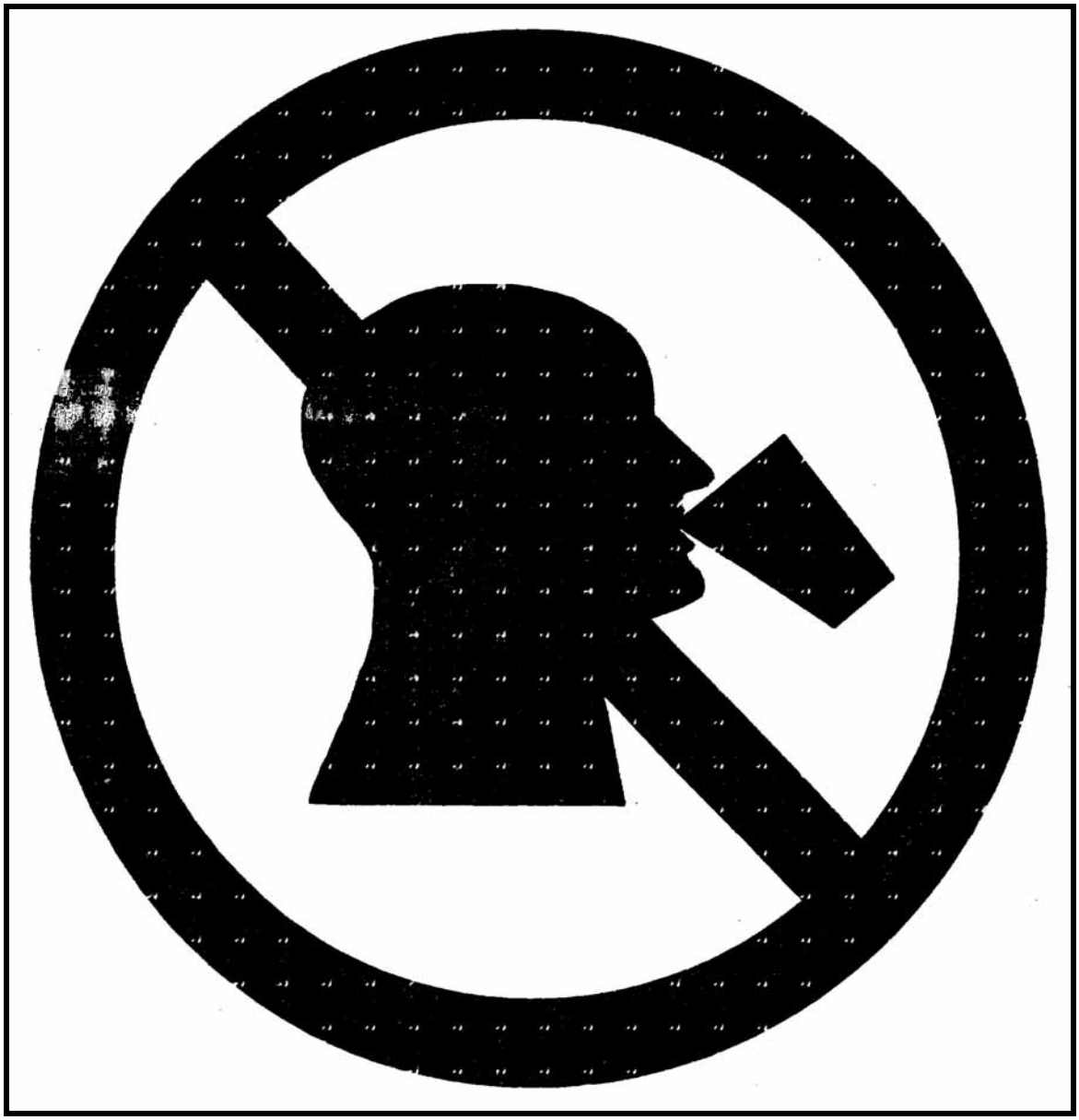
ATTACHMENT G – RECYCLED WATER SIGNAGE