CALIFORNIA REGIONAL WATER QUALITY CONTROL BOARD
CENTRAL VALLEY REGION

ORDER NO. R5-2006-XXXX
NPDES NO. CA0083828

WASTE DISCHARGE REQUIREMENTS
FOR
CLEAR CREEK COMMUNITY SERVICES DISTRICT
CLEAR CREEK COMMUNITY SERVICES DISTRICT WATER TREATMENT PLANT
SHASTA COUNTY

The following Discharger is subject to waste discharge requirements as set forth in this Order:

Discharger	Clear Creek Community Services District
Name of Facility	Clear Creek Community Services District Water Treatment Plant
Facility Address	Paige Bar Road
	Igo, California 96047
	Shasta County

The discharge by the owner/operator from the discharge points identified below is subject to waste discharge requirements as set forth in this Order:

Discharge Point	Effluent Description	Discharge Point Latitude	Discharge Point Longitude	Receiving Water
001	Settled Filter Backwash Water	40º, 35', 53" N	122 º, 32', 17" W	Clear Creek

This Order was adopted by the California Regional Water Quality Control Board on:	Adoption Date
This Order shall become effective on:	Effective Date
This Order shall expire on:	Expiration Date
The U.S. Environmental Protection Agency and the California Regional Water Quality Control Board have classified this discharge as a minor discharge.	
The Discharger shall file a Report of Waste Discharge in accordance with Title 23, California Code of Regulations, not later than 180 days in advance of the Order expiration date as application for issuance of new waste discharge requirements.	

IT IS HEREBY ORDERED, that Order No. 5-01-081 is rescinded upon the effective date of this Order except for enforcement purposes, and, in order to meet the provisions contained in Division 7 of the California Water Code and regulations adopted thereunder, and the provisions of the federal Clean Water Act, and regulations and guidelines adopted thereunder, the Discharger shall comply with the requirements in this Order.

I, PAMELA C. CREEDON, Executive Officer, do hereby certify that this Order with all attachments is a full, true, and correct copy of an Order adopted by the California Regional Water Quality Control Board, Central Valley Region, on **Adoption Date**.

_____
PAMELA C. CREEDON, Executive Officer

TABLE OF CONTENTS

I. Facility Information 2
II. Findings 3
III. Discharge Prohibitions 8
IV. Effluent Limitations and Discharge Specifications 8
- **A.** Effluent Limitations – Discharge Point 001 8
- **B.** Low Threat Discharge Limitations 9
- **C.** Land Discharge Specifications – Not Applicable 9
- **D.** Reclamation Specifications – Not Applicable 9

V. Receiving Water Limitations 10
- **A.** Surface Water Limitations 10
- **B.** Groundwater Limitations 12

VI. Provisions 13
- **A.** Standard Provisions 13
- **B.** Monitoring and Reporting Program Requirements 18
- **C.** Special Provisions 18
  1. Reopener Provisions 18
  2. Special Studies, Technical Reports and Additional Monitoring Requirements 18
  3. Best Management Practices and Pollution Prevention – Not Applicable 19
  4. Construction, Operation and Maintenance Specifications – Not Applicable 19
  5. Special Provisions for Municipal Facilities (POTWs Only) – Not Applicable 19
  6. Other Special Provisions 19
  7. Compliance Schedules - Not Applicable 23

VII. Compliance Determination 23
Attachment A – Definitions A-1
Attachment B – Topographic Map B-1
Attachment C – Flow Schematic C-1
Attachment D – Federal Standard Provisions D-1
Attachment E – Monitoring and Reporting Program (MRP) E-1
Attachment F – Fact Sheet F-1
Attachment G – Reasonable Potential Analysis (RPA) G-1
Attachment H – Water Quality-Based Effluent Limitation Calculations H-1
Attachment I – Acronyms and Abbreviations I-1

I. FACILITY INFORMATION

The following Discharger is subject to waste discharge requirements as set forth in this Order:

Discharger	Clear Creek Community Services District
Name of Facility	Clear Creek Community Services District Water Treatment Plant
Facility Address	Paige Bar Road
	Igo, CA 96047
	Shasta County
Facility Contact, Title, and Phone	Ronald Carlin, Filter Plant Supervisor, (530) 357-2121
Mailing Address	5880 Oak Street, Anderson, CA 96007
Type of Facility	Water Treatment Facility
Facility Wastewater Design Flow	1.5 million gallons per day (maximum)

II. FINDINGS

The California Regional Water Quality Control Board, Central Valley Region (hereinafter Regional Water Board), finds:

A. Background. Clear Creek Community Services District (hereinafter Discharger) is currently discharging under Order No. 5-01-081 and National Pollutant Discharge Elimination System (NPDES) Permit No. CA0083828. The Discharger submitted a Report of Waste Discharge, dated 31 December 2003, and applied for a NPDES permit renewal to discharge up to 1.5 million gallons per day (mgd) of settled filter backwash water from the Clear Creek Community Services District Water Treatment Plant (hereinafter Facility). The application was deemed complete on 10 March 2006.

For the purposes of this Order, references to the "discharger" or "permittee" in applicable federal and State laws, regulations, plans, or policy are held to be equivalent to references to the Discharger herein.

B. Facility Description. The Discharger owns and operates a drinking water treatment plant. The water treatment system consists of raw water chlorination, coagulation, filtration through eight horizontal, multi-cell pressure filters and post chlorination. The Facility discharges settled filter backwash water from Discharge Point 001 (see table on cover page) to Clear Creek, a water of the United States and a tributary to Sacramento River, within Shasta Bally Hydrologic Unit, Clear Creek Hydrologic Area, Kanaka Peak Hydrologic Sub-area (524.62). Attachment B provides a map of the area around the Facility. Attachment C provides a flow schematic of the Facility.

C. Legal Authorities. This Order is issued pursuant to section 402 of the Federal Clean Water Act (CWA) and implementing regulations adopted by the U.S. Environmental Protection Agency (USEPA) and Chapter 5.5, Division 7 of the California Water Code (CWC). It shall serve as a NPDES permit for point source discharges from this facility to surface waters. This Order also serves as Waste Discharge Requirements (WDRs) pursuant to Article 4, Chapter 4 of the CWC for discharges that are not subject to regulation under CWA section 402.

D. Background and Rationale for Requirements. The Regional Water Board developed the requirements in this Order based on information submitted as part of the application, through monitoring and reporting programs, and other available information. Attachment F (Fact Sheet), which contains background information and rationale for Order requirements, is hereby incorporated into this Order and constitutes part of the Findings for this Order. Attachments A through I are also incorporated into this Order.

E. California Environmental Quality Act (CEQA). This action to adopt an NPDES permit is exempt from the provisions of the California Environmental Quality Act (Public Resources Code Section 21000, *et seq.*) in accordance with Section 13389 of the CWC.

F. Technology-Based Effluent Limitations. The Code of Federal Regulations (CFR) at 40 CFR §122.44(a) requires that permits include applicable technology-based limitations and standards. This Order includes technology-based effluent limitations based on Best Professional Judgment (BPJ) in accordance with 40 CFR §125.3. A detailed discussion of the technology-based effluent limitations development is included in the Fact Sheet.

G. Water Quality-Based Effluent Limitations. Section 122.44(d) of 40 CFR requires that permits include water quality-based effluent limitations (WQBELs) to attain and maintain applicable numeric and narrative water quality criteria to protect the beneficial uses of the receiving water. Where numeric water quality objectives have not been established, 40 CFR §122.44(d) specifies that WQBELs may be established using USEPA criteria guidance under CWA section 304(a), proposed State criteria or a State policy interpreting narrative criteria supplemented with other relevant information, or an indicator parameter.

H. Water Quality Control Plans. The Regional Water Board adopted a *Water Quality Control Plan, Fourth Edition,* for the *Sacramento and San Joaquin River Basins* (hereinafter Basin Plan) that designates beneficial uses, establishes water quality objectives, and contains implementation programs and policies to achieve those objectives for all waters addressed through the plan. In addition, State Water Resources Control Board (State Water Board) Resolution No. 88-63 requires that, with certain exceptions, the Regional Water Board assign the municipal and domestic supply use to water bodies that do not have beneficial uses listed in the Basin Plan.

The Basin Plan at page II-2.00 for Sac/SJ states that the "…*beneficial uses of any specifically identified water body generally apply to its tributary streams*." The Basin Plan identifies beneficial uses for Clear Creek. These beneficial uses are as follows: municipal and domestic supply; agricultural supply, including stock watering; water contact recreation; non-contact water recreation; warm freshwater habitat; cold freshwater habitat; cold migration of aquatic organisms; spawning, reproduction, and/or early development; and wildlife habitat. Thus, as discussed in detail in the Fact Sheet, beneficial uses applicable to Clear Creek are as follows:

Discharge Point	Receiving Water Name	Beneficial Use(s)
001	Clear Creek	Existing: municipal and domestic supply (MUN); agricultural supply, including stock watering (AGR); water contact recreation, including canoeing and rafting (REC-1); non-contact water recreation, including aesthetic enjoyment (REC-2); warm freshwater habitat (WARM); cold freshwater habitat (COLD); cold migration of aquatic organisms (MGR); warm spawning, reproduction, and/or early development (SPWN); cold spawning, reproduction, and /or early development (SPWN); and wildlife habitat (WILD). Groundwater: MUN; AGR; IND; and PRO.

I. ***National Toxics Rule*** **(NTR) and** ***California Toxics Rule*** **(CTR).** USEPA adopted the NTR on 22 December 1992, which was amended on 4 May 1995 and 9 November 1999, and the CTR on 18 May 2000, which was amended on 13 February 2001. These rules include water quality criteria for priority pollutants and are applicable to this discharge.

J. **State Implementation Policy.** On 2 March 2000, the State Water Board adopted the *Policy for Implementation of Toxics Standards for Inland Surface Waters, Enclosed Bays, and Estuaries of California* (State Implementation Policy or SIP). The SIP became effective on 28 April 2000 with respect to the priority pollutant criteria promulgated for California by the USEPA through the NTR and to the priority pollutant objectives established by the Regional Water Board in the Basin Plan. The SIP became effective on 18 May 2000 with respect to the priority pollutant criteria promulgated by the USEPA through the California Toxics Rule. The State Water Board adopted amendments to the SIP on 24 February 2005 that became effective on 13 July 2005.

K. **Compliance Schedules and Interim Requirements.** Section 2.1 of the SIP provides that, based on a discharger's request and demonstration that it is infeasible for an existing discharger to achieve immediate compliance with an effluent limitation derived from a CTR criterion, compliance schedules may be allowed in an NPDES permit. Unless an exception has been granted under Section 5.3 of the SIP, a compliance schedule may not exceed five years from the date that the permit is issued or reissued, nor may it extend beyond ten years from the effective date of the SIP (or 18 May 2010) to establish and comply with CTR criterion-based effluent limitations. Where a compliance schedule for a final effluent limitation exceeds one year, the Order must include interim numeric limitations for that constituent or parameter. Where allowed by the Basin Plan, compliance schedules and interim effluent limitations or discharge specifications may also be granted to allow time to implement a new or revised water quality objective. A detailed discussion of the basis for compliance schedule(s) and interim effluent limitation(s) is included in the Fact Sheet.

L. **Alaska Rule.** On 30 March 2000, USEPA revised its regulation that specifies when new and revised State and Tribal water quality standards (WQS) become effective for CWA purposes (40 CFR 131.21, 65 FR 24641, 27 April 2000). Under the revised regulation (also known as the Alaska rule), new and revised standards submitted to USEPA after 30 May 2000 must be

approved by USEPA before being used for CWA purposes. The final rule also provides that standards already in effect and submitted to USEPA by 30 May 2000 may be used for CWA purposes, whether or not approved by USEPA.

M. Stringency of Requirements for Individual Pollutants. This Order contains restrictions on individual pollutants that are no more stringent than required by the federal CWA. Individual pollutant restrictions consist of technology-based restrictions and water quality-based effluent limitations. The technology-based effluent limitations consist of restrictions on settleable solids and total suspended solids (TSS). Restrictions on settleable solids and TSS are specified in federal regulations as discussed in Finding F, and the permit's technology-based pollutant restrictions are no more stringent than required by the CWA. Water quality-based effluent limitations have been scientifically derived to implement water quality objectives that protect beneficial uses. Both the beneficial uses and the water quality objectives have been approved pursuant to federal law and are the applicable federal water quality standards. To the extent that toxic pollutant water quality-based effluent limitations were derived from the CTR, the CTR is the applicable standard pursuant to 40 CFR 131.38. The scientific procedures for calculating the individual water quality-based effluent limitations are based on the CTR-SIP, which was approved by USEPA on 18 May 2000. All beneficial uses and water quality objectives contained in the Basin Plan were approved under state law and submitted to and approved by USEPA prior to 30 May 2000. Any water quality objectives and beneficial uses submitted to USEPA prior to 30 May 2000, but not approved by USEPA before that date, are nonetheless "*applicable water quality standards for purposes of the CWA*" pursuant to 40 CFR 131.21(c)(1). Collectively, this Order's restrictions on individual pollutants are no more stringent than required to implement the technology-based requirements of the CWA and the applicable water quality standards for purposes of the CWA.

N. Antidegradation Policy. Section 131.12 of 40 CFR requires that State water quality standards include an antidegradation policy consistent with the federal policy. The State Water Board established California's antidegradation policy in State Water Board Resolution 68-16, which incorporates the requirements of the federal antidegradation policy. Resolution 68-16 requires that existing quality of waters be maintained unless degradation is justified based on specific findings. As discussed in detail in the Fact Sheet the permitted discharge is consistent with the antidegradation provision of 40 CFR §131.12 and State Water Board Resolution 68-16.

O. Anti-Backsliding Requirements. Sections 402(o)(2) and 303(d)(4) of the CWA and federal regulations at 40 CFR § 122.44(l) prohibit backsliding in NPDES permits. These anti-backsliding provisions require effluent limitations in a reissued permit to be as stringent as those in the previous permit, with some exceptions where limitations may be relaxed. All effluent limitations in this Order are at least as stringent as the effluent limitations in the previous Order.

P. Monitoring and Reporting. Section 122.48 of 40 CFR requires that all NPDES permits specify requirements for recording and reporting monitoring results. Sections 13267 and 13383 of the CWC authorize the Regional Water Board to require technical and monitoring reports. The Monitoring and Reporting Program establishes monitoring and reporting requirements to implement federal and State requirements. This Monitoring and Reporting Program (MRP) is provided in Attachment E.

Q. Standard and Special Provisions. Standard Provisions, which in accordance with 40 CFR §§122.41and 122.42, apply to all NPDES discharges and must be included in every NPDES permit, are provided in Attachment D. The Regional Water Board has also included in this Order special provisions applicable to the Discharger. A rationale for the special provisions contained in this Order is provided in the attached Fact Sheet.

R. Notification of Interested Parties. The Regional Water Board has notified the Discharger and interested agencies and persons of its intent to prescribe Waste Discharge Requirements for the discharge and has provided them with an opportunity to submit their written comments and recommendations. Details of notification are provided in the Fact Sheet of this Order.

S. Consideration of Public Comment. The Regional Water Board, in a public meeting, heard and considered all comments pertaining to the discharge. Details of the Public Hearing are provided in the Fact Sheet of this Order.

III. DISCHARGE PROHIBITIONS

A. Discharge of wastewater at a location or in a manner different from that described in the Findings is prohibited.

B. The by-pass or overflow of wastes to surface waters is prohibited, except as allowed by Federal Standard Provision I.A.7. [See Attachment D – Federal Standard Provisions] and Regional Water Board Standard Provision VI.A.2.g.

C. Neither the discharge nor its treatment shall create a nuisance as defined in Section 13050 of the CWC.

D. The Discharger shall not allow pollutant-free wastewater to be discharged into the collection, treatment, and disposal system in amounts that significantly diminish the system's capability to comply with this Order. Pollutant-free wastewater means rainfall, groundwater, cooling waters, and condensates that are essentially free of pollutants.

IV. EFFLUENT LIMITATIONS AND DISCHARGE SPECIFICATIONS

A. Effluent Limitations – Discharge Point 001

1. **Final Effluent Limitations – Discharge Point 001**

   a. The discharge of settled filter backwash water shall maintain compliance with the following effluent limitations at Discharge Point 001, with compliance measured at Monitoring Location EFF-001 as described in the attached MRP:

Parameter	Units	Effluent Limitations			
		Average Monthly	Maximum Daily	Instantaneous Minimum	Instantaneous Maximum
Flow	mgd	--	1.5	--	--
Settleable Solids	mL/L-hr	0.1	0.2	--	--
Total Suspended Solids	mg/L	30	50	--	--
pH	standard units	--	--	6.0	9.0

   b. **Total Residual Chlorine**: Effluent total residual chlorine shall not exceed the following:

      i. 0.01 mg/L as a four-day average; and
      ii. 0.02 mg/L as a one-hour average.

c. **Acute Toxicity**: Survival of aquatic organisms in 96-hour bioassays of undiluted waste shall be no less than:

Minimum for any one bioassay - 70%
Median for any three or more consecutive bioassays - - - - 90%

2. **Interim Effluent Limitations – Not Applicable**

B. Low Threat Discharge Limitations

Low threat discharges shall maintain compliance with the following effluent limitations with compliance measured at and described in the attached MRP.

Parameter	Units	Low Threat Discharges Limitations				
		Average Monthly	Average Weekly	Maximum Daily	Instantaneous Min	Instantaneous Max
Flow[1]	mgd	--	--	0.25	--	--
Settleable Solids	mL/L-hr	10	15	--	--	--
Total Suspended Solids	mg/L	10	15	--	--	--
Chlorine, Total Residual	mg/L	--	--	--	--	0.02

C. Land Discharge Specifications – Not Applicable

D. Reclamation Specifications – Not Applicable

[1] Limitation applies if flow is greater than four months in duration.

V. RECEIVING WATER LIMITATIONS

A. Surface Water Limitations

Receiving water limitations are based on water quality objectives contained in the Basin Plan and are a required part of this Order. The discharge shall not cause the following in Clear Creek:

1. **Fecal Coliform**. The fecal coliform concentration, based on a minimum of not less than five samples for any 30-day period, to exceed a geometric mean of 200 MPN/100 mL, nor more than ten percent of the total number of fecal coliform samples taken during any 30-day period to exceed 400 MPN/100 mL.

2. **Biostimulatory Substances**. Water to contain biostimulatory substances which promote aquatic growths in concentrations that cause nuisance or adversely affect beneficial uses.

3. **Chemical Constituents**. Chemical constituents to be present in concentrations that adversely affect beneficial uses.

4. **Discoloration**. Discoloration that causes nuisance or adversely affects beneficial uses.

5. **Dissolved Oxygen**:

   a. The monthly median of the mean daily dissolved oxygen concentration to fall below 85 percent of saturation in the main water mass;

   b. The 95th percentile dissolved oxygen concentration to fall below 75 percent of saturation; nor

   c. The dissolved oxygen concentration to be reduced below 7.0 mg/L at any time.

6. **Floating Material**. Floating material to be present in amounts that cause nuisance or adversely affect beneficial uses.

7. **Oils and Greases**. Oils, greases, waxes, or other materials to be present in concentrations that cause nuisance, result in a visible film or coating on the surface of the water or on objects in the water, or otherwise adversely affect beneficial uses.

8. **pH**. The pH to be depressed below 6.5 raised above 8.5, nor changed by more than 0.5 units.

9. **Pesticides**:

   a. Pesticides to be present, individually or in combination, in concentrations that adversely affect beneficial uses;

   b. Pesticides to be present in bottom sediments or aquatic life in concentrations that adversely affect beneficial uses;

c. Total identifiable persistent chlorinated hydrocarbon pesticides to be present in the water column at concentrations detectable within the accuracy of analytical methods approved by USEPA or the Executive Officer.

d. Pesticide concentrations to exceed those allowable by applicable antidegradation policies (see State Water Board Resolution No. 68-16 and 40 CFR §131.12.).

e. Pesticide concentrations to exceed the lowest levels technically and economically achievable.

f. Pesticides to be present in concentration in excess of the maximum contaminant levels set forth in California Code of Regulations (CCR), Title 22, Division 4, Chapter 15.

g. Thiobencarb to be present in excess of 1.0 ug/L.

10. **Radioactivity**:

a. Radionuclides to be present in concentrations that are harmful to human, plant, animal, or aquatic life nor that result in the accumulation of radionuclides in the food web to an extent that presents a hazard to human, plant, animal, or aquatic life.

b. Radionuclides to be present in excess of the maximum contaminant levels specified in Table 4 (MCL Radioactivity) of Section 64443 of Title 22 of the CCR.

11. **Suspended Sediments**. The suspended sediment load and suspended sediment discharge rate of surface waters to be altered in such a manner as to cause nuisance or adversely affect beneficial uses.

12. **Settleable Substances**. Substances to be present in concentrations that result in the deposition of material that causes nuisance or adversely affects beneficial uses.

13. **Suspended Material**. Suspended material to be present in concentrations that cause nuisance or adversely affect beneficial uses.

14. **Taste- or Odor-Producing Substances**. Taste- or odor-producing substances to be present in concentrations that impart undesirable tastes or odors to fish flesh or other edible products of aquatic origin, or that cause nuisance, or otherwise adversely affect beneficial uses.

15. **Temperature**. The natural temperature to be increased by more than 5°F.

16. **Toxic Substances**. Toxic substances to be present, individually or in combination, in concentrations that produce detrimental physiological responses in human, plant, animal, or aquatic life.

17. **Turbidity**. The turbidity to increase as follows:

a. More than 1 Nephelometric Turbidity Unit (NTU) where natural turbidity is between 0 and 5 NTUs.

b. More than 20 percent where natural turbidity is between 5 and 50 NTUs.

c. More than 10 NTU where natural turbidity is between 50 and 100 NTUs.

d. More than 10 percent where natural turbidity is greater than 100 NTUs.

B. Groundwater Limitations

The discharge shall not cause the groundwater to exceed water quality objectives, unreasonably affect beneficial uses, or cause a condition of pollution or nuisance.

VI. PROVISIONS

A. Standard Provisions

1. **Federal Standard Provisions**. The Discharger shall comply with all Standard Provisions included in Attachment D of this Order.

   The Regional Water Board is authorized to enforce the terms of this permit under several provisions of the CWC, including, but not limited to, Sections 13385, 13386, and 13387.

2. **Regional Water Board Standard Provisions.** The Discharger shall comply with the following provisions:

   a. If the Discharger's wastewater treatment plant is publicly owned or subject to regulation by California Public Utilities Commission, it shall be supervised and operated by persons possessing certificates of appropriate grade according to Title 23, CCR, Division 3, Chapter 14.

   b. After notice and opportunity for a hearing, this Order may be terminated or modified for cause, including, but not limited to:

      i. violation of any term or condition contained in this Order;

      ii. obtaining this Order by misrepresentation or by failing to disclose fully all relevant facts;

      iii. a change in any condition that requires either a temporary or permanent reduction or elimination of the authorized discharge; and

      iv. a material change in the character, location, or volume of discharge.

      The causes for modification include:

      i. New regulations. New regulations have been promulgated under Section 405(d) of the CWA, or the standards or regulations on which the permit was based have been changed by promulgation of amended standards or regulations or by judicial decision after the permit was issued.

      ii. Land application plans. When required by a permit condition to incorporate a land application plan for beneficial reuse of sewage sludge, to revise an existing land application plan, or to add a land application plan.

      iii. Change in sludge use or disposal practice. Under 40 CFR 122.62(a)(1), a change in the Discharger's sludge use or disposal practice is a cause for modification of the permit. It is cause for revocation and reissuance if the Discharger requests or agrees.

The Regional Water Board may review and revise this Order at any time upon application of any affected person or the Board's own motion.

c. If a toxic effluent standard or prohibition (including any scheduled compliance specified in such effluent standard or prohibition) is established under Section 307(a) of the CWA, or amendments thereto, for a toxic pollutant that is present in the discharge authorized herein, and such standard or prohibition is more stringent than any limitation upon such pollutant in this Order, the Regional Water Board will revise or modify this Order in accordance with such toxic effluent standard or prohibition.

   The Discharger shall comply with effluent standards and prohibitions within the time provided in the regulations that establish those standards or prohibitions, **even if this Order has not yet been modified**.

d. If more stringent applicable water quality standards are approved, pursuant to Section 303 of the CWA, or amendments thereto, the Regional Water Board will revise and modify this Order in accordance with such more stringent standards.

e. This Order shall be modified, or alternately revoked and reissued, to comply with any applicable effluent standard or limitation issued or approved under Sections 301(b)(2)(C) and (D), 304(b)(2), and 307(a)(2) of the CWA, if the effluent standard or limitation so issued or approved:

   i. contains different conditions or is otherwise more stringent than any effluent limitation in the Order; or

   ii. controls any pollutant limited in the Order.

   The Order, as modified or reissued under this paragraph, shall also contain any other requirements of the CWA then applicable.

f. The provisions of this Order are severable. If any provision of this Order is found invalid, the remainder of this Order shall not be affected.

g. By-pass (the intentional diversion of waste streams from any portion of a treatment facility or collection system, except those portions designed to meet variable effluent limits) is prohibited except under the following conditions:

   i. by-pass is required for essential maintenance to assure efficient operation;

   and

   ii. neither effluent nor receiving water limitations are exceeded;

   and

iii. the Discharger notifies the Regional Water Board ten days in advance.

h. The Discharger shall take all reasonable steps to minimize any adverse effects to waters of the State or users of those waters resulting from any discharge or sludge use or disposal in violation of this Order. Reasonable steps shall include such accelerated or additional monitoring as necessary to determine the nature and impact of the non-complying discharge or sludge use or disposal.

i. The Discharger shall ensure compliance with any existing or future pretreatment standard promulgated by USEPA under Section 307 of the CWA, or amendment thereto, for any discharge to the municipal system.

j. The discharge of any radiological, chemical or biological warfare agent or high-level, radiological waste is prohibited.

k. A copy of this Order shall be maintained at the discharge facility and be available at all times to operating personnel. Key operating personnel shall be familiar with its content.

l. Neither the treatment nor the discharge shall create a condition of nuisance or pollution as defined by the CWC, Section 13050.

m. Safeguard to electric power failure:

i. The Discharger shall provide safeguards to assure that, should there be reduction, loss, or failure of electric power, the discharge shall comply with the terms and conditions of this Order.

ii. Upon written request by the Regional Water Board the Discharger shall submit a written description of safeguards. Such safeguards may include alternate power sources, standby generators, retention capacity, operating procedures, or other means. A description of the safeguards provided shall include an analysis of the frequency, duration, and impact of power failures experienced over the past five years on effluent quality and on the capability of the Discharger to comply with the terms and conditions of the Order. The adequacy of the safeguards is subject to the approval of the Regional Water Board.

iii. Should the treatment works not include safeguards against reduction, loss, or failure of electric power, or should the Regional Water Board not approve the existing safeguards, the Discharger shall, within ninety days of having been advised in writing by the Regional Water Board that the existing safeguards are inadequate, provide to the Regional Water Board and USEPA a schedule of compliance for providing safeguards such that in the event of reduction, loss, or failure of electric power, the Discharger shall comply with the terms and conditions of this Order. The schedule of compliance shall, upon approval of the Regional Water Board, become a condition of this Order.

n. The Discharger, upon written request of the Regional Water Board, shall file with the Board a technical report on its preventive (failsafe) and contingency (cleanup) plans for controlling accidental discharges, and for minimizing the effect of such events. This report may be combined with that required under Regional Water Board Standard Provision VI.A.2.m.

   The technical report shall:

   i. Identify the possible sources of spills, leaks, untreated waste by-pass, and contaminated drainage. Loading and storage areas, power outage, waste treatment unit outage, and failure of process equipment, tanks and pipes should be considered.

   ii. Evaluate the effectiveness of present facilities and procedures and state when they became operational.

   iii. Predict the effectiveness of the proposed facilities and procedures and provide an implementation schedule containing interim and final dates when they will be constructed, implemented, or operational.

   The Regional Water Board, after review of the technical report, may establish conditions which it deems necessary to control accidental discharges and to minimize the effects of such events. Such conditions shall be incorporated as part of this Order, upon notice to the Discharger.

o. A publicly owned treatment works (POTW) whose waste flow has been increasing, or is projected to increase, shall estimate when flows will reach hydraulic and treatment capacities of its treatment and disposal facilities. The projections shall be made in January, based on the last three years' average dry weather flows, peak wet weather flows and total annual flows, as appropriate. When any projection shows that capacity of any part of the facilities may be exceeded in four years, the Discharger shall notify the Regional Water Board by **31 January**. A copy of the notification shall be sent to appropriate local elected officials, local permitting agencies and the press. Within 120 days of the notification, the Discharger shall submit a technical report showing how it will prevent flow volumes from exceeding capacity or how it will increase capacity to handle the larger flows. The Regional Water Board may extend the time for submitting the report.

p. The Discharger shall submit technical reports as directed by the Executive Officer.

q. Chemical, bacteriological, and bioassay analyses shall be conducted at a laboratory certified for such analyses by the State Department of Health Services. In the event a certified laboratory is not available to the Discharger, analyses performed by a noncertified laboratory will be accepted provided a Quality Assurance/Quality Control (QA/QC) Program is instituted by the laboratory. A manual containing the steps followed in this program must be kept in the laboratory and shall be available for inspection by Board staff. The QA/QC Program must conform to EPA guidelines or to procedures approved by the Regional Water Board.

Unless otherwise specified, all metals shall be reported as Total Metals.

Unless otherwise specified, bioassays shall be performed in the following manner:

i. Acute bioassays shall be performed in accordance with guidelines approved by the Regional Water Board and the Department of Fish and Game or in accordance with methods described in USEPA's manual for measuring acute toxicity of effluents (EPA-821-R-02-012 and subsequent amendments).

ii. Short-term chronic bioassays shall be performed in accordance with USEPA guidelines (EPA-821-R-02-013 and subsequent amendments).

r. Laboratories that perform sample analyses must be identified in all monitoring reports submitted to the Regional Water Board and USEPA.

s. The Discharger shall conduct analysis on any sample provided by USEPA as part of the Discharge Monitoring Quality Assurance (DMQA) program. The results of any such analysis shall be submitted to USEPA's DMQA manager.

t. Effluent samples shall be taken downstream of the last addition of wastes to the treatment or discharge works where a representative sample may be obtained prior to mixing with the receiving waters. Samples shall be collected at such a point and in such a manner to ensure a representative sample of the discharge.

u. All monitoring and analysis instruments and devices used by the Discharger to fulfill the prescribed monitoring program shall be properly maintained and calibrated as necessary, at least yearly, to ensure their continued accuracy.

v. The Discharger shall file with the Regional Water Board technical reports on self-monitoring performed according to the detailed specifications contained in the MRP attached to this Order.

w. The results of all monitoring required by this Order shall be reported to the Regional Water Board, and shall be submitted in such a format as to allow direct comparison with the limitations and requirements of this Order. Unless otherwise specified, discharge flows shall be reported in terms of the monthly average and the daily maximum discharge flows.

x. Upon written request of the Board, the Discharger shall submit a summary monitoring report to the Board. The report shall contain both tabular and graphical summaries of the monitoring data obtained during the previous year(s).

B. Monitoring and Reporting Program Requirements

1. The discharger shall comply with the MRP, and future revisions thereto, in Attachment E of this Order.

2. Within **60 days** of permit adoption, the Discharger shall submit a report outlining minimum levels, method detection limits, and analytical methods for approval, with a goal to achieve detection levels below applicable water quality criteria. At a minimum, the Discharger shall comply with the monitoring requirements for CTR constituents as outlined in Section 2.3 and 2.4 of the *Policy for Implementation of Toxics Standards for Inland Surface Waters, Enclosed Bays, and Estuaries of California*, adopted 2 March 2000 by the State Water Resources Control Board. All peaks identified by analytical methods shall be reported.

C. Special Provisions

1. **Reopener Provisions**

   a. Upon adoption of any applicable water quality standard for receiving waters by the Regional Water Board or the State Water Board pursuant to the CWA and regulations adopted thereunder, this permit may be reopened and receiving water limitations added.

   b. If chronic toxicity testing specified in Section VI.C.2.a indicates that the discharge causes, has the reasonable potential to cause, or contributes to an in-stream excursion above the water quality objective for toxicity, this Order shall be reopened and a chronic toxicity limitation included and/or a limitation for the specific toxicant identified in the TRE included. Additionally, if a chronic toxicity water quality objective is adopted by the State Water Board, this Order may be reopened and a limitation based on that objective included.

   c. If after review of effluent and receiving water monitoring results it is determined that the discharge has reasonable potential to cause or contribute to an exceedance of a water quality objective, or the discharge is causing groundwater degradation; this Order will be reopened, effluent limitations added for the subject constituents, and a groundwater investigation and subsequent monitoring may be required.

   d. If the State Water Board and the Regional Water Boards are given the authority to implement regulations contained in 40 CFR 503, this Order may be reopened to incorporate appropriate time schedules and technical standards. The Discharger must comply with the standards and time schedules contained in 40 CFR 503 whether or not they have been incorporated into this Order.

2. **Special Studies, Technical Reports and Additional Monitoring Requirements**

   a. **Chronic Whole Effluent Toxicity**. The Discharger shall conduct the chronic toxicity testing specified in the MRP. If the testing indicates that the discharge causes, has the reasonable potential to cause, or contributes to an in-stream excursion above the narrative water quality objective for toxicity, the Discharger shall initiate a Toxicity Identification

Evaluation (TIE) to identify the causes of toxicity. Upon completion of the TIE, the Discharger shall submit a workplan to conduct a Toxicity Reduction Evaluation (TRE) and, after Regional Water Board evaluation, conduct the TRE. This Order may be reopened and a chronic toxicity limitation included and/or a limitation for the specific toxicant identified in the TRE included. Additionally, if a chronic toxicity water quality objective is adopted by the State Water Board, this Order may be reopened and a limitation based on that objective included.

3. **Best Management Practices and Pollution Prevention – Not Applicable**

4. **Construction, Operation and Maintenance Specifications – Not Applicable**

5. **Special Provisions for Municipal Facilities (POTWs Only) – Not Applicable**

6. **Other Special Provisions**

   a. **Sludge Disposal Requirements.**

      i. Collected screenings, sludge, and other solids removed from liquid wastes shall be disposed of in a manner approved by the Executive Officer, and consistent with *Consolidated Regulations for Treatment, Storage, Processing, or Disposal of Solid Waste*, as set forth in Title 27, CCR, Division 2, Subdivision 1, Section 20005, et seq.

      ii. Any proposed change in sludge use or disposal practice from a previously approved practice shall be reported to the Executive Officer and USEPA Regional Administrator at least **90 days** in advance of the change.

      iii. Use and disposal of sewage sludge shall comply with existing federal and State laws and regulations, including permitting requirements and technical standards included in 40 CFR 503.

      iv. If the State Water Resources Control Board and the Regional Water Quality Control Boards are given the authority to implement regulations contained in 40 CFR 503, this Order may be reopened to incorporate appropriate time schedules and technical standards. The Discharger must comply with the standards and time schedules contained in 40 CFR 503 whether or not they have been incorporated into this Order.

      v. The Discharger is encouraged to comply with the "Manual of Good Practice for Agricultural Land Application of Biosolids" developed by the California Water Environment Association.

      vi. By **PERMIT EFFECTIVE DATE + 180 DAYS**, the Discharger shall submit an updated sludge disposal plan describing the annual volume of sludge generated by the plant and specifying the disposal practices as described in Sludge Monitoring Section VIII.A. of the MRP.

   b. **Low Threat Discharges Requirements.**

i. The following discharges are authorized by this Order provided they do not contain significant quantities of pollutants, and they do not exceed 0.25 mgd unless four months or less in duration.

1. Well development water including testing or start up;

2. Construction dewatering;

3. Pump/well testing;

4. Pipeline/tank pressure testing;

5. Pipeline/tank flushing or dewatering;

6. Condensate discharges;

7. Miscellaneous water supply system discharges; and

8. Other miscellaneous dewatering/low threat discharges.

ii. Collected screenings and other solids removed from piping, tanks, and other equipment prior to discharge shall be disposed of in a manner consistent with Title 23 of the CCR Chapter 15, Division 3.

iii. **Pollution Prevention, Monitoring, and Reporting Plan (PPMRP)**

The Discharger shall prepare a PPMRP for Low Threat Discharges, to address all expected discharges. The PPMRP should address or include the following:

1. The PPMRP shall provide a general description of the raw water supply and distribution systems, types and frequency of potential discharges, potential discharge locations, possible pollutant types, possible flow rates and duration, and receiving waters.

2. The PPMRP shall identify best management practices (BMPs) for each type of discharge that will be used to prevent or minimize the discharge of pollutants. Where appropriate, BMPs shall include, but not be limited to the following:

a. Prior to testing or flushing of empty tanks and pipelines, solid wastes shall be removed for proper disposal.

b. Erosion and sedimentation control practices at discharge point(s) shall be implemented, if necessary. Discharges shall adhere to applicable State and local recommended procedures for erosion and sediment control.

c. The discharge of waters must be controlled to the lowest possible rate to minimize potential impacts on aquatic life and to reduce erosion. Adequate dewatering structures and velocity dissipation devices shall be used when necessary to prevent and minimize erosion, stream scouring, increases in turbidity, and any other potential damage to receiving waters. Such devices may include splash pads, straw bales, silt fences, and vegetated buffer zones. The discharge shall not cause downstream flooding conditions.

d. Discharges shall be conducted to avoid potential pollution to private or public water wells.

e. Dechlorination methods shall be used to assure that discharges to surface waters do not contain a chlorine residual in excess of 0.02 mg/L.

f. The Discharger shall evaluate the need for treatment of low threat waters before discharge to meet the effluent limitations and requirements of this Order. Possible treatment technologies to evaluate include filtration, settling ponds, and/or pumping to upland areas.

3. Develop a representative sampling and monitoring program.

The PPMRP for Low Threat Discharges shall include a monitoring schedule for low threat discharges. The plan shall include the following provisions:

a. The discharge (rate of flow and duration) shall be estimated for all discharges.

b. Sampling and analyses are not required for every dewatering water and other low threat discharge, if the Discharger can provide reasonable assurance that discharges will comply with the prohibitions and limitations of this Order. However, a sampling and analysis program shall be developed and implemented to monitor a representative selection of low threat discharges to verify that the discharges comply with this Order.

c. When reasonable assurance cannot be provided that a discharge will comply with the prohibitions and limitations of this Order, at least one sample of the discharge shall be collected per day at a location prior to its entry into a receiving body of water. The sample shall be collected to reflect the character of the discharge during the first 1,000 gallons of the discharge. This sample shall be analyzed for chlorine and settleable and suspended solids.

d. When reasonable assurance cannot be provided that a discharge will comply with the prohibitions and limitations of this Order, and the discharge will be greater than 50,000 gallons, at least two samples shall be collected per day at a location prior to its entry into a receiving body of water. Samples shall be collected to reflect the character of the discharge during the first and last 1,000 gallons of the discharge. These samples shall be analyzed for chlorine and settleable and suspended solids.

e. When reasonable assurance cannot be provided that a discharge will comply with the prohibitions and limitations of this Order, observations of the discharge and of the receiving water shall be made and recorded on a daily basis and reflect the worst-case conditions observed in terms of: floating or suspended matter, discoloration and turbidity, erosion, odors, films, sheens, and other potential nuisance conditions.

4. The low threat discharges shall maintain compliance with the effluent limitations described in Low Threat Discharge Limitations Section IV.B of this Order, with compliance measured at monitoring locations as described in the attached MRP.

5. The PPMRP shall be revised and updated as necessary to reflect applicable changes in the Discharger's practices.

6. The Discharger shall meet all other requirements and conditions of this Order.

c. All technical reports required herein that involve planning, investigation, evaluation, or design, or other work requiring interpretation and proper application of engineering or geologic sciences, shall be prepared by or under the direction of persons registered to practice in California pursuant to California Business and Professions Code, Sections 6735, 7835, and 7835.1. To demonstrate compliance with Title 16, CCR, Sections 415 and 3065, all technical reports must contain a statement of the qualifications of the responsible registered professional(s). As required by these laws, completed technical reports must bear the signature(s) and seal(s) of the registered professional(s) in a manner such that all work can be clearly attributed to the professional(s) responsible for the work.

d. In the event the Discharger does not comply or will be unable to comply for any reason, with any prohibition or limitation contained in this Order, the Discharger shall notify the Regional Water Board by telephone (530) 224-4845 within 24 hours of having knowledge of such noncompliance, and shall confirm this notification in writing within five days, unless the Regional Water Board waives confirmation. The written notification shall include the information required by Federal Standard Provision V.E.1 [40 CFR §122.41(l)(6)(i)].

e. Prior to making any change in the discharge point, place of use, or purpose of use of the wastewater, the Discharger shall obtain approval of, or clearance from the State Water Resources Control Board (Division of Water Rights).

f. In the event of any change in control or ownership of land or waste discharge facilities presently owned or controlled by the Discharger, the Discharger shall notify the succeeding owner or operator of the existence of this Order by letter, a copy of which shall be immediately forwarded to this office.

To assume operation under this Order, the succeeding owner or operator must apply in writing to the Executive Officer requesting transfer of the Order. The request must contain the requesting entity's full legal name, the State of incorporation if a corporation, address and telephone number of the persons responsible for contact with the Regional Water Board and a statement. The statement shall comply with the signatory paragraph of Standard Provision V.B and state that the new owner or operator assumes full responsibility for compliance with this Order. Failure to submit the request shall be considered a discharge without requirements, a violation of the CWC. Transfer shall be approved or disapproved in writing by the Executive Officer.

7. **Compliance Schedules - Not Applicable**

VII. COMPLIANCE DETERMINATION

Compliance with the effluent limitations contained in Section IV of this Order will be determined as specified below:

A. Multiple Sample Data

When determining compliance with an average monthly effluent limitation and more than one sample result is available in a month, the Discharger shall compute the arithmetic mean unless the data set contains one or more reported determinations of DNQ or ND. In those cases, the Discharger shall compute the median in place of the arithmetic mean in accordance with the following procedure:

1. The data set shall be ranked from low to high, reported ND determinations lowest, DNQ determinations next, followed by quantified values (if any). The order of the individual ND or DNQ determinations is unimportant.

2. The median value of the data set shall be determined. If the data set has an odd number of data points, then the median is the middle value. If the data set has an even number of data points, then the median is the average of the two values around the middle unless one or both of the points are ND or DNQ, in which case the median value shall be the lower of the two data points where DNQ is lower than a value and ND is lower than DNQ.

B. Average Hourly Effluent Limitation

If the average of analytical results of samples collected within 1-hour is higher than the maximum 1-hour average effluent limitation for a parameter, a violation will be flagged and the Discharger will be considered out of compliance for that parameter.

C. Average Four-Day Effluent Limitation

If the average of daily discharges over the past 4-days exceeds the 4-day average effluent limitation for a given parameter, a violation will be flagged and the Discharger will be considered out of compliance for each of the 4-days for that parameter, resulting in 4 days of non-compliance. If only a single sample is taken during a 4-day period and the analytical result for that sample exceeds the 4-day average effluent limitation, the Discharger will be considered out of compliance for the 4-day period.

D. Average Monthly Effluent Limitation (AMEL)

If the average of daily discharges over a calendar month exceeds the AMEL for a given parameter, an alleged violation will be flagged and the discharger will be considered out of compliance for each day of that month for that parameter (*e.g.*, resulting in 31 days of non-compliance in a 31-day month). The average of daily discharges over the calendar month that exceeds the AMEL for a parameter will be considered out of compliance for that month only. If only a single sample is taken during the calendar month and the analytical result for that sample exceeds the AMEL, the discharger will be considered out of compliance for that calendar month. For any one calendar month during which no sample (daily discharge) is taken, no compliance determination can be made for that calendar month.

E. Average Weekly Effluent Limitation (AWEL)

If the average of daily discharges over a calendar week exceeds the AWEL for a given parameter, an alleged violation will be flagged and the discharger will be considered out of compliance for each day of that week for that parameter, resulting in seven (7) days of non-compliance. The average of daily discharges over the calendar week that exceeds the AWEL for a parameter will be considered out of compliance for that week only. If only a single sample is taken during the calendar week and the analytical result for that sample exceeds the AWEL, the discharger will be considered out of compliance for that calendar week. For any one calendar week during which no sample (daily discharge) is taken, no compliance determination can be made for that calendar week.

F. Maximum Daily Effluent Limitation (MDEL)

If a daily discharge exceeds the MDEL for a given parameter, an alleged violation will be flagged and the discharger will be considered out of compliance for that parameter for that one day only within the reporting period. For any one day during which no sample is taken, no compliance determination can be made for that day.

G. Instantaneous Minimum Effluent Limitation

If the analytical result of a single grab sample is lower than the instantaneous minimum effluent limitation for a parameter, a violation will be flagged and the discharger will be considered out of compliance for that parameter for that single sample. Non-compliance for each sample will be considered separately (*e.g.*, the results of two grab samples taken within a calendar day that both

are lower than the instantaneous minimum effluent limitation would result in two instances of non-compliance with the instantaneous minimum effluent limitation).

H. Instantaneous Maximum Effluent Limitation

If the analytical result of a single grab sample is higher than the instantaneous maximum effluent limitation for a parameter, a violation will be flagged and the discharger will be considered out of compliance for that parameter for that single sample. Non-compliance for each sample will be considered separately (*e.g.*, the results of two grab samples taken within a calendar day that both exceed the instantaneous maximum effluent limitation would result in two instances of non-compliance with the instantaneous maximum effluent limitation).

ATTACHMENT A – DEFINITIONS

Average Four-Day Effluent Limitation: the highest allowable average of daily discharges over a four-day period, calculated as the sum of all daily discharges measured during a four-day period divided by the number of daily discharges measured during that four-day period.

Average Hourly Effluent Limitation: the highest allowable average of discharges over a one-hour period, calculated as the sum of all discharges measured during that one-hour period divided by the number of discharges measured during that one-hour period.

Average Monthly Effluent Limitation (AMEL): the highest allowable average of daily discharges over a calendar month, calculated as the sum of all daily discharges measured during a calendar month divided by the number of daily discharges measured during that month.

Average Weekly Effluent Limitation (AWEL): the highest allowable average of daily discharges over a calendar week (Sunday through Saturday), calculated as the sum of all daily discharges measured during a calendar week divided by the number of daily discharges measured during that week.

Daily Discharge: Daily Discharge is defined as either: (1) the total mass of the constituent discharged over the calendar day (12:00 am through 11:59 pm) or any 24-hour period that reasonably represents a calendar day for purposes of sampling (as specified in the permit), for a constituent with limitations expressed in units of mass or; (2) the unweighted arithmetic mean measurement of the constituent over the day for a constituent with limitations expressed in other units of measurement (*e.g.*, concentration).

The daily discharge may be determined by the analytical results of a composite sample taken over the course of one day (a calendar day or other 24-hour period defined as a day) or by the arithmetic mean of analytical results from one or more grab samples taken over the course of the day.

For composite sampling, if one day is defined as a 24-hour period other than a calendar day, the analytical result for the 24-hour period will be considered as the result for the calendar day in which the 24-hour period ends.

Instantaneous Maximum Effluent Limitation: the highest allowable value for any single grab sample or aliquot (*i.e.*, each grab sample or aliquot is independently compared to the instantaneous maximum limitation).

Instantaneous Minimum Effluent Limitation: the lowest allowable value for any single grab sample or aliquot (*i.e.*, each grab sample or aliquot is independently compared to the instantaneous minimum limitation).

Maximum Daily Effluent Limitation (MDEL): the highest allowable daily discharge of a pollutant.

Percent Removal: the arithmetic mean of biochemical oxygen demand (5-day @ 20 ºC) and total suspended solids in effluent samples collected over a monthly period as a percentage of the arithmetic mean of the values for influent samples collected at approximately the same times during the same period (85 percent removal).

ATTACHMENT B – TOPOGRAPHIC MAP

Drawing Reference: IGO U.S.G.S TOPOGRAPHIC MAP 7.5 MINUTE QUADRANGLE Not to scale	SITE LOCATION MAP CLEAR CREEK COMMUNITY SERVICES DISTRICT (CCCSD) CCCSD WATER TREATMENT PLANT SHASTA COUNTY	N W E S

ATTACHMENT C – FLOW SCHEMATIC

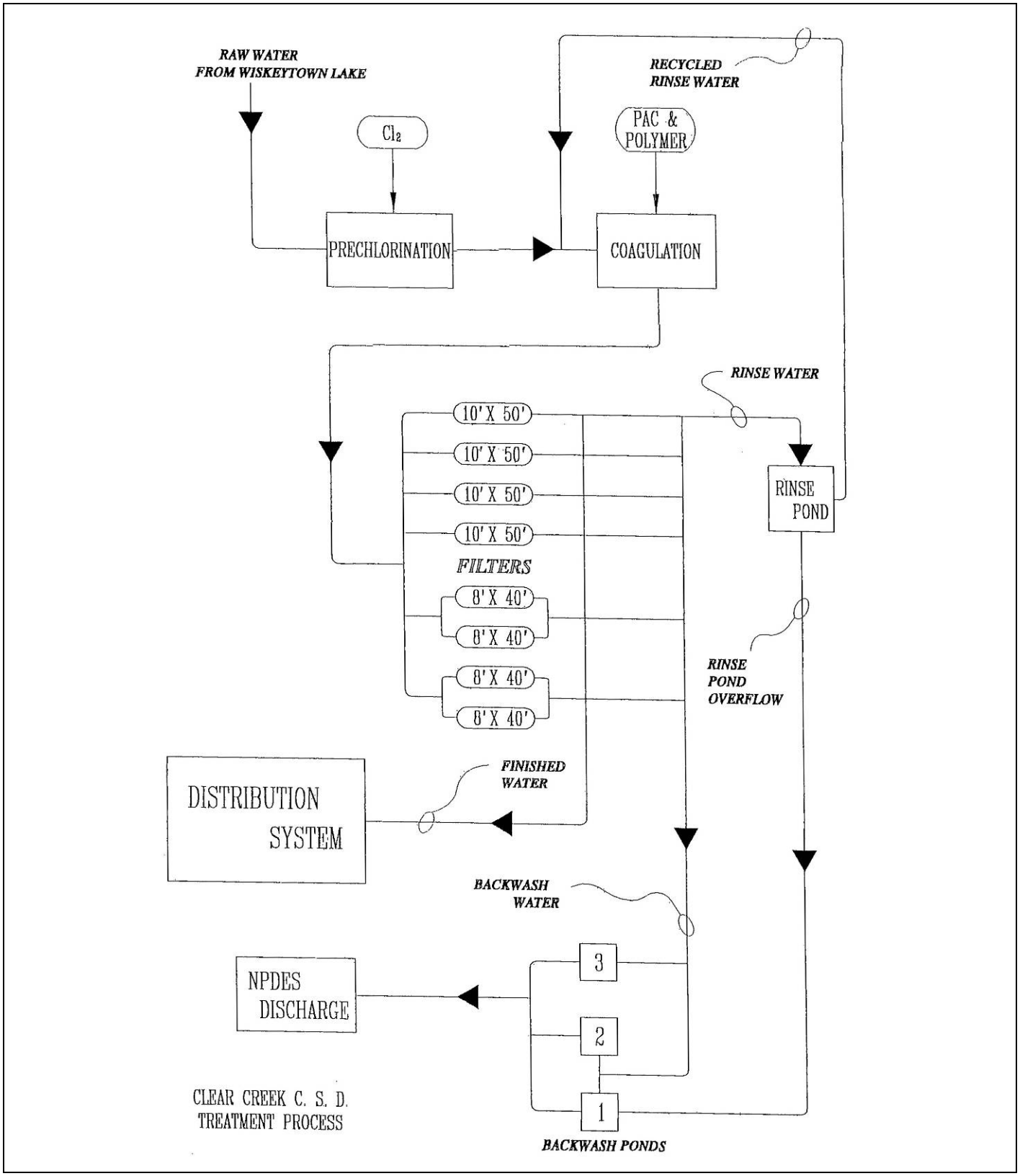

ATTACHMENT D – FEDERAL STANDARD PROVISIONS

I. STANDARD PROVISIONS – PERMIT COMPLIANCE

A. Duty to Comply

1. The Discharger must comply with all of the conditions of this Order. Any noncompliance constitutes a violation of the Clean Water Act (CWA) and the California Water Code (CWC) and is grounds for enforcement action, for permit termination, revocation and reissuance, or denial of a permit renewal application [*40 CFR §122.41(a)*].

2. The Discharger shall comply with effluent standards or prohibitions established under Section 307(a) of the CWA for toxic pollutants and with standards for sewage sludge use or disposal established under Section 405(d) of the CWA within the time provided in the regulations that establish these standards or prohibitions, even if this Order has not been modified to incorporate the requirement [*40 CFR §122.41(a)(1)*].

B. Need to Halt or Reduce Activity Not a Defense

It shall not be a defense for a Discharger in an enforcement action that it would have been necessary to halt or reduce the permitted activity in order to maintain compliance with the conditions of this Order [*40 CFR §122.41(c)*].

C. Duty to Mitigate

The Discharger shall take all reasonable steps to minimize or prevent any discharge or sludge use or disposal in violation of this Order that has a reasonable likelihood of adversely affecting human health or the environment [*40 CFR §122.41(d)*].

D. Proper Operation and Maintenance

The Discharger shall at all times properly operate and maintain all facilities and systems of treatment and control (and related appurtenances) which are installed or used by the Discharger to achieve compliance with the conditions of this Order. Proper operation and maintenance also includes adequate laboratory controls and appropriate quality assurance procedures. This provision requires the operation of backup or auxiliary facilities or similar systems that are installed by a Discharger only when necessary to achieve compliance with the conditions of this Order [*40 CFR §122.41(e)*].

E. Property Rights

1. This Order does not convey any property rights of any sort or any exclusive privileges [*40 CFR §122.41(g)*].

2. The issuance of this Order does not authorize any injury to persons or property or invasion of other private rights, or any infringement of State or local law or regulations [*40 CFR §122.5(c)*].

F. Inspection and Entry

The Discharger shall allow the Regional Water Quality Control Board (Regional Water Board), State Water Resources Control Board (State Water Board), United States Environmental Protection Agency (USEPA), and/or their authorized representatives (including an authorized contractor acting as their representative), upon the presentation of credentials and other documents, as may be required by law, to [*40 CFR §122.41(i)*] [*CWC 13383(c)*]:

1. Enter upon the Discharger's premises where a regulated facility or activity is located or conducted, or where records are kept under the conditions of this Order [*40 CFR §122.41(i)(1)*];

2. Have access to and copy, at reasonable times, any records that must be kept under the conditions of this Order [*40 CFR §122.41(i)(2)*];

3. Inspect and photograph, at reasonable times, any facilities, equipment (including monitoring and control equipment), practices, or operations regulated or required under this Order [*40 CFR §122.41(i)(3)*];

4. Sample or monitor, at reasonable times, for the purposes of assuring Order compliance or as otherwise authorized by the CWA or the CWC, any substances or parameters at any location [*40 CFR §122.41(i)(4)*].

G. Bypass

1. Definitions

   a. "Bypass" means the intentional diversion of waste streams from any portion of a treatment facility [*40 CFR §122.41(m)(1)(i)*].

   b. "Severe property damage" means substantial physical damage to property, damage to the treatment facilities, which causes them to become inoperable, or substantial and permanent loss of natural resources that can reasonably be expected to occur in the absence of a bypass. Severe property damage does not mean economic loss caused by delays in production [*40 CFR §122.41(m)(1)(ii)*].

2. Bypass not exceeding limitations – The Discharger may allow any bypass to occur which does not cause exceedances of effluent limitations, but only if it is for essential maintenance to assure efficient operation. These bypasses are not subject to the provisions listed in Standard Provisions – Permit Compliance I.G.3, I.G.4, and I.G.5 below [*40 CFR §122.41(m)(2)*].

3. Prohibition of bypass – Bypass is prohibited, and the Regional Water Board may take enforcement action against a Discharger for bypass, unless [*40 CFR §122.41(m)(4)(i)*]:

    a. Bypass was unavoidable to prevent loss of life, personal injury, or severe property damage [*40 CFR §122.41(m)(4)(A)*];

    b. There were no feasible alternatives to the bypass, such as the use of auxiliary treatment facilities, retention of untreated wastes, or maintenance during normal periods of equipment downtime. This condition is not satisfied if adequate back-up equipment should have been installed in the exercise of reasonable engineering judgment to prevent a bypass that occurred during normal periods of equipment downtime or preventive maintenance [*40 CFR §122.41(m)(4)(B)*]; and

    c. The Discharger submitted notice to the Regional Water Board as required under Standard Provisions – Permit Compliance I.G.5 below [*40 CFR §122.41(m)(4)(C)*].

4. The Regional Water Board may approve an anticipated bypass, after considering its adverse effects, if the Regional Water Board determines that it will meet the three conditions listed in Standard Provisions – Permit Compliance I.G.3 above [*40 CFR §122.41(m)(4)(ii)*].

5. Notice

    a. Anticipated bypass. If the Discharger knows in advance of the need for a bypass, it shall submit a notice, if possible at least 10 days before the date of the bypass [*40 CFR §122.41(m)(3)(i)*].

    b. Unanticipated bypass. The Discharger shall submit notice of an unanticipated bypass as required in Standard Provisions - Reporting V.E below (24-hour notice) [*40 CFR §122.41(m)(3)(ii)*].

H. Upset

Upset means an exceptional incident in which there is unintentional and temporary noncompliance with technology based permit effluent limitations because of factors beyond the reasonable control of the permittee. An upset does not include noncompliance to the extent caused by operational error, improperly designed treatment facilities, inadequate treatment facilities, lack of preventive maintenance, or careless or improper operation [*40 CFR §122.41(n)(1)*].

1. Effect of an upset. An upset constitutes an affirmative defense to an action brought for noncompliance with such technology based permit effluent limitations if the requirements of Standard Provisions – Permit Compliance I.H.2 below are met. No determination made during administrative review of claims that noncompliance was caused by upset, and before an action for noncompliance, is final administrative action subject to judicial review [*40 CFR §122.41(n)(2)*].

2. Conditions necessary for a demonstration of upset. A Discharger who wishes to establish the affirmative defense of upset shall demonstrate, through properly signed, contemporaneous operating logs or other relevant evidence that [*40 CFR §122.41(n)(3)*]:

   a. An upset occurred and that the Discharger can identify the cause(s) of the upset [*40 CFR §122.41(n)(3)(i)*];

   b. The permitted facility was, at the time, being properly operated [*40 CFR §122.41(n)(3)(i)*];

   c. The Discharger submitted notice of the upset as required in Standard Provisions – Reporting V.E.2.b below (24-hour notice) [*40 CFR §122.41(n)(3)(iii)*]; and

   d. The Discharger complied with any remedial measures required under Standard Provisions – Permit Compliance I.C above [*40 CFR §122.41(n)(3)(iv)*].

3. Burden of proof. In any enforcement proceeding, the Discharger seeking to establish the occurrence of an upset has the burden of proof [*40 CFR §122.41(n)(4)*].

II. STANDARD PROVISIONS – PERMIT ACTION

A. General

This Order may be modified, revoked and reissued, or terminated for cause. The filing of a request by the Discharger for modification, revocation and reissuance, or termination, or a notification of planned changes or anticipated noncompliance does not stay any Order condition [*40 CFR §122.41(f)*].

B. Duty to Reapply

If the Discharger wishes to continue an activity regulated by this Order after the expiration date of this Order, the Discharger must apply for and obtain a new permit [*40 CFR §122.41(b)*].

C. Transfers

This Order is not transferable to any person except after notice to the Regional Water Board. The Regional Water Board may require modification or revocation and reissuance of the Order to change the name of the Discharger and incorporate such other requirements as may be necessary under the CWA and the CWC [*40 CFR §122.41(l)(3)*] [*40 CFR §122.61*].

III. STANDARD PROVISIONS – MONITORING

A. Samples and measurements taken for the purpose of monitoring shall be representative of the monitored activity [*40 CFR §122.41(j)(1)*].

B. Monitoring results must be conducted according to test procedures under 40 CFR Part 136 or, in the case of sludge use or disposal, approved under 40 CFR Part 136 unless otherwise specified in 40 CFR Part 503 unless other test procedures have been specified in this Order [*40 CFR §122.41(j)(4)*] [*40 CFR §122.44(i)(1)(iv)*].

IV. STANDARD PROVISIONS – RECORDS

A. Except for records of monitoring information required by this Order related to the Discharger's sewage sludge use and disposal activities, which shall be retained for a period of at least five years (or longer as required by 40 CFR Part 503), the Discharger shall retain records of all monitoring information, including all calibration and maintenance records and all original strip chart recordings for continuous monitoring instrumentation, copies of all reports required by this Order, and records of all data used to complete the application for this Order, for a period of at least three (3) years from the date of the sample, measurement, report or application. This period may be extended by request of the Regional Water Board Executive Officer at any time [*40 CFR §122.41(j)(2)*].

B. Records of monitoring information shall include:

1. The date, exact place, and time of sampling or measurements [*40 CFR §122.41(j)(3)(i)*];
2. The individual(s) who performed the sampling or measurements [*40 CFR §122.41(j)(3)(ii)*];
3. The date(s) analyses were performed [*40 CFR §122.41(j)(3)(iii)*];
4. The individual(s) who performed the analyses [*40 CFR §122.41(j)(3)(iv)*];
5. The analytical techniques or methods used [*40 CFR §122.41(j)(3)(v)*]; and
6. The results of such analyses [*40 CFR §122.41(j)(3)(vi)*].

C. Claims of confidentiality for the following information will be denied [*40 CFR §122.7(b)*]:

1. The name and address of any permit applicant or Discharger [*40 CFR §122.7(b)(1)*]; and
2. Permit applications and attachments, permits and effluent data [*40 CFR §122.7(b)(2)*].

V. STANDARD PROVISIONS – REPORTING

A. Duty to Provide Information

The Discharger shall furnish to the Regional Water Board, State Water Board, or USEPA within a reasonable time, any information which the Regional Water Board, State Water Board, or USEPA may request to determine whether cause exists for modifying, revoking and reissuing, or terminating this Order or to determine compliance with this Order. Upon request, the Discharger

shall also furnish to the Regional Water Board, State Water Board, or USEPA copies of records required to be kept by this Order [*40 CFR §122.41(h)*] [*CWC 13267*].

B. Signatory and Certification Requirements

1. All applications, reports, or information submitted to the Regional Water Board, State Water Board, and/or USEPA shall be signed and certified in accordance with Standard Provisions – Reporting V.B.2, V.B.3, V.B.4, and V.B.5 below [*40 CFR §122.41(k)*].

2. All permit applications shall be signed as follows:

   a. For a corporation: By a responsible corporate officer. For the purpose of this section, a responsible corporate officer means: (i) A president, secretary, treasurer, or vice-president of the corporation in charge of a principal business function, or any other person who performs similar policy- or decision-making functions for the corporation, or (ii) the manager of one or more manufacturing, production, or operating facilities, provided, the manager is authorized to make management decisions which govern the operation of the regulated facility including having the explicit or implicit duty of making major capital investment recommendations, and initiating and directing other comprehensive measures to assure long term environmental compliance with environmental laws and regulations; the manager can ensure that the necessary systems are established or actions taken to gather complete and accurate information for permit application requirements; and where authority to sign documents has been assigned or delegated to the manager in accordance with corporate procedures [*40 CFR §122.22(a)(1)*];

   b. For a partnership or sole proprietorship: by a general partner or the proprietor, respectively [*40 CFR §122.22(a)(2)*]; or

   c. For a municipality, State, federal, or other public agency: by either a principal executive officer or ranking elected official. For purposes of this provision, a principal executive officer of a federal agency includes: (i) the chief executive officer of the agency, or (ii) a senior executive officer having responsibility for the overall operations of a principal geographic unit of the agency (*e.g.*, Regional Administrators of USEPA) [*40 CFR §122.22(a)(3)*].

3. All reports required by this Order and other information requested by the Regional Water Board, State Water Board, or USEPA shall be signed by a person described in paragraph (b) of this provision, or by a duly authorized representative of that person. A person is a duly authorized representative only if:

   a. The authorization is made in writing by a person described in paragraph (2.) of this provision [*40 CFR §122.22(b)(1)*];

   b. The authorization specified either an individual or a position having responsibility for the overall operation of the regulated facility or activity such as the position of plant manager, operator of a well or a well field, superintendent, position of equivalent

responsibility, or an individual or position having overall responsibility for environmental matters for the company (a duly authorized representative may thus be either a named individual or any individual occupying a named position) [*40 CFR §122.22(b)(2)*]; and

c. The written authorization is submitted to the Regional Water Board, State Water Board, or USEPA [*40 CFR §122.22(b)(3)*].

4. If an authorization under paragraph (3.) of this provision is no longer accurate because a different individual or position has responsibility for the overall operation of the facility, a new authorization satisfying the requirements of paragraph (3.) of this provision must be submitted to the Regional Water Board, State Water Board, or USEPA prior to or together with any reports, information, or applications, to be signed by an authorized representative [40 CFR §122.22(c)].

5. Any person signing a document under paragraph (2.) or (3.) of this provision shall make the following certification:

   "*I certify under penalty of law that this document and all attachments were prepared under my direction or supervision in accordance with a system designed to assure that qualified personnel properly gather and evaluate the information submitted. Based on my inquiry of the person or persons who manage the system or those persons directly responsible for gathering the information, the information submitted is, to the best of my knowledge and belief, true, accurate, and complete. I am aware that there are significant penalties for submitting false information, including the possibility of fine and imprisonment for knowing violations*" [*40 CFR §122.22(d)*].

C. Monitoring Reports

1. Monitoring results shall be reported at the intervals specified in the Monitoring and Reporting Program in this Order [*40 CFR §122.41(l)(4)*].

2. Monitoring results must be reported on a Discharge Monitoring Report (DMR) form or forms provided or specified by the Regional Water Board or State Water Board for reporting results of monitoring of sludge use or disposal practices [*40 CFR §122.41(l)(4)(i)*].

3. If the Discharger monitors any pollutant more frequently than required by this Order using test procedures approved under 40 CFR Part 136 or, in the case of sludge use or disposal, approved under 40 CFR Part 136 unless otherwise specified in 40 CFR Part 503, or as specified in this Order, the results of this monitoring shall be included in the calculation and reporting of the data submitted in the DMR or sludge reporting form specified by the Regional Water Board [*40 CFR §122.41(l)(4)(ii)*].

4. Calculations for all limitations, which require averaging of measurements, shall utilize an arithmetic mean unless otherwise specified in this Order [*40 CFR §122.41(l)(4)(iii)*].

D. Compliance Schedules

Reports of compliance or noncompliance with, or any progress reports on, interim and final requirements contained in any compliance schedule of this Order, shall be submitted no later than 14 days following each schedule date [*40 CFR §122.41(l)(5)*].

E. Twenty-Four Hour Reporting

1. The Discharger shall report any noncompliance that may endanger health or the environment. Any information shall be provided orally within 24 hours from the time the Discharger becomes aware of the circumstances. A written submission shall also be provided within five (5) days of the time the Discharger becomes aware of the circumstances. The written submission shall contain a description of the noncompliance and its cause; the period of noncompliance, including exact dates and times, and if the noncompliance has not been corrected, the anticipated time it is expected to continue; and steps taken or planned to reduce, eliminate, and prevent reoccurrence of the noncompliance [*40 CFR §122.41(l)(6)(i)*].

2. The following shall be included as information that must be reported within 24 hours under this paragraph [*40 CFR §122.41(l)(6)(ii)*]:

   a. Any unanticipated bypass that exceeds any effluent limitation in this Order [*40 CFR §122.41(l)(6)(ii)(A)*].

   b. Any upset that exceeds any effluent limitation in this Order [*40 CFR §122.41(l)(6)(ii)(B)*].

3. The Regional Water Board may waive the above-required written report under this provision on a case-by-case basis if an oral report has been received within 24 hours [*40 CFR §122.41(l)(6)(iii)*].

F. Planned Changes

The Discharger shall give notice to the Regional Water Board as soon as possible of any planned physical alterations or additions to the permitted facility. Notice is required under this provision only when [*40 CFR §122.41(l)(1)*]:

1. The alteration or addition to a permitted facility may meet one of the criteria for determining whether a facility is a new source in 40 CFR §122.29(b) [*40 CFR §122.41(l)(1)(i)*]; or

2. The alteration or addition could significantly change the nature or increase the quantity of pollutants discharged. This notification applies to pollutants which are not subject to effluent limitations in this Order. [*40 CFR Section 122.41(l)(1)(ii)*].

3. The alteration or addition results in a significant change in the Discharger's sludge use or disposal practices, and such alteration, addition, or change may justify the application of permit conditions that are different from or absent in the existing permit, including notification of additional use or disposal sites not reported during the permit application process or not reported pursuant to an approved land application plan [*40 CFR §122.41(l)(1)(iii)*].

G. Anticipated Noncompliance

The Discharger shall give advance notice to the Regional Water Board or State Water Board of any planned changes in the permitted facility or activity that may result in noncompliance with General Order requirements [*40 CFR §122.41(l)(2)]*.

H. Other Noncompliance

The Discharger shall report all instances of noncompliance not reported under Standard Provisions – Reporting V.C, V.D, and V.E above at the time monitoring reports are submitted. The reports shall contain the information listed in Standard Provision – Reporting V.E above [*40 CFR §122.41(l)(7)*].

I. Other Information

When the Discharger becomes aware that it failed to submit any relevant facts in a permit application, or submitted incorrect information in a permit application or in any report to the Regional Water Board, State Water Board, or USEPA, the Discharger shall promptly submit such facts or information [*40 CFR §122.41(l)(8)*].

VI. STANDARD PROVISIONS – ENFORCEMENT—NOT APPLICABLE

VII. ADDITIONAL PROVISIONS – NOTIFICATION LEVELS

A. Non-Municipal Facilities

Existing manufacturing, commercial, mining, and silvicultural dischargers shall notify the Regional Water Board as soon as they know or have reason to believe [*40 CFR §122.42(a)*]:

1. That any activity has occurred or will occur that would result in the discharge, on a routine or frequent basis, of any toxic pollutant that is not limited in this Order, if that discharge will exceed the highest of the following "notification levels" [*40 CFR §122.42(a)(1)*]:

    a. 100 micrograms per liter (µg/L) [*40 CFR §122.42(a)(1)(i)*];

    b. 200 µg/L for acrolein and acrylonitrile; 500 µg/L for 2,4-dinitrophenol and 2-methyl-4,6-dinitrophenol; and 1 milligram per liter (mg/L) for antimony [*40 CFR §122.42(a)(1)(ii)*];

    c. Five (5) times the maximum concentration value reported for that pollutant in the Report of Waste Discharge [*40 CFR §122.42(a)(1)(iii)*]; or

    d. The level established by the Regional Water Board in accordance with 40 CFR §122.44(f) [*40 CFR §122.42(a)(1)(iv)*].

2. That any activity has occurred or will occur that would result in the discharge, on a non-routine or infrequent basis, of any toxic pollutant that is not limited in this Order, if that discharge will exceed the highest of the following "notification levels" [*40 CFR §122.42(a)(2)*]:

   a. 500 micrograms per liter (µg/L) [*40 CFR §122.42(a)(2)(i)*];

   b. 1 milligram per liter (mg/L) for antimony [*40 CFR §122.42(a)(2)(ii)*];

   c. Ten (10) times the maximum concentration value reported for that pollutant in the Report of Waste Discharge [*40 CFR §122.42(a)(2)(iii)*]; or

   d. The level established by the Regional Water Board in accordance with 40 CFR §122.44(f) [*40 CFR §122.42(a)(2)(iv)*].

Attachment E – Monitoring and Reporting Program – Table of Contents

Attachment E – Monitoring and Reporting Program (MRP) E-2
I. General Monitoring Provisions E-2
II. Monitoring Locations E-2
III. Effluent Monitoring Requirements E-3
A. Monitoring Location EFF-001 ..... E-3
IV. Whole Effluent Toxicity (WET) Testing Requirements E-4
A. Acute Toxicity Testing. E-4
B. Chronic Toxicity Testing. E-4
C. WET Testing Notification Requirements E-6
D. WET Testing Reporting Requirements E-6
V. Land Discharge Monitoring Requirements – Not Applicable E-7
VI. Reclamation Monitoring Requirements – Not Applicable E-7
VII. Receiving Water Monitoring Requirements – Surface Water E-8
A. Monitoring Locations R-001 and R-002 ..... E-8
VIII. Other Monitoring Requirements E-9
A. Sludge Monitoring—Monitoring Location PND-001, PND-002, and PND-003 ..... E-9
B. Low Threat Discharges—Monitoring Locations EFF-001A E-9
IX. Reporting Requirements E-11
A. General Monitoring and Reporting Requirements E-11
B. Self Monitoring Reports (SMRs) E-11
C. Discharge Monitoring Reports (DMRs) – Not Applicable E-13
D. Other Reports E-13

ATTACHMENT E – MONITORING AND REPORTING PROGRAM (MRP)

The Code of Federal Regulations (CFR) at 40 CFR §122.48 requires that all NPDES permits specify monitoring and reporting requirements. California Water Code (CWC) sections 13267 and 13383 also authorize the Regional Water Quality Control Board (Regional Water Board) to require technical and monitoring reports. This MRP establishes monitoring and reporting requirements which implement the federal and California regulations.

I. GENERAL MONITORING PROVISIONS

A. All monitoring and analysis instruments and devices used by the Discharger to fulfill the prescribed monitoring program shall be properly maintained and calibrated as necessary, at least yearly, to ensure their continued accuracy.

B. A letter transmitting the self-monitoring reports shall accompany each report. Such a letter shall include a discussion of requirement violations found during the reporting period, and actions taken or planned for correcting noted violations, such as operation or facility modifications. If the Discharger has previously submitted a report describing corrective actions and/or a time schedule for implementing the corrective actions, reference to the previous correspondence will be satisfactory. The transmittal letter shall contain the penalty of perjury statement by the Discharger, or the Discharger's authorized agent, as described in the Standard Provisions.

C. If the Discharger monitors any pollutant at the locations designated herein more frequently than is required by this Order, the results of such monitoring shall be included in the calculation and reporting of the values required in the discharge monitoring report form. Such increased frequency shall be indicated on the discharge monitoring report form.

D. Laboratories analyzing monitoring samples shall be certified by the Department of Health Services, in accordance with the provision of CWC Section 13176, and must include quality assurance/quality control data with their reports.

II. MONITORING LOCATIONS

The Discharger shall establish the following monitoring locations to demonstrate compliance with the effluent limitations, discharge specifications, and other requirements in this Order:

Discharge Point Name	Monitoring Location Name	Monitoring Location Description
EFF-001	EFF-001	Downstream from the last connection through which wastes can be admitted to the outfall. (40° 41' 36" N, 122° 24' 10" W)
EFF-001A	EFF-001A	Monitoring locations are established when low threat discharges are identified.
--	R-001	Approximately 50 feet upstream from the point of discharge to Clear Creek.
--	R-002	Approximately 50 feet downstream from the point of discharge to Clear Creek.
--	PND-001	Treatment plant settling pond number 1 (southernmost).
--	PND-002	Treatment plant settling pond number 2 (middle).
--	PND-003	Treatment plant settling pond number 3 (northernmost).

III. EFFLUENT MONITORING REQUIREMENTS

A. Monitoring Location EFF-001

1. Effluent samples shall be collected downstream from the last connection through which wastes can be admitted into the outfall, following the last unit process. Effluent samples should be representative of the volume and quality of the discharge. Time of collection of samples shall be recorded. The Discharger shall monitor settled filter backwash water at EFF-001 as follows:

Parameter	Units	Sample Type	Minimum Sampling Frequency	Required Analytical Test Method
Flow	mgd	Meter	Continuous	[1]
pH	standard units	Grab	2 Times Monthly	[1]
Settleable Solids	mL/L-hr	Grab	2 Times Monthly	[1]
Total Suspended Solids	µg/L	Grab	2 Times Monthly	[1]
Chlorine, Total Residual	mg/L	Grab	2 Times Monthly	[1]
Electrical Conductivity @ 25 ºC	µmhos/cm	Grab	Quarterly	[1]
Dichlorobromomethane	µg/L	Grab	Quarterly	[1]
Bis (2-ethylhexyl) phthalate	µg/L	Grab	Quarterly	[1]
Aluminum, Total Recoverable	µg/L	Grab	Quarterly	[1]
Iron, Total Recoverable	µg/L	Grab	Quarterly	[1]
Manganese, Total Recoverable	µg/L	Grab	Quarterly	[1]
Acute Toxicity	% survival	Grab	Annually	[2]
Priority Pollutants	µg/L	Grab	1 / Permit Lifecycle	[1]

2. If the discharge is intermittent rather than continuous, then on the first day of each such intermittent discharge, the Discharger shall monitor and record data for all of the constituents listed above, except for priority pollutants, after which the frequencies of analysis given in the schedule shall apply for the duration of each such intermittent discharge. In no event shall the Discharger be required to monitor and record data more

[1] Pollutants shall be analyzed using the analytical methods described in 40 CFR sections 136;
for priority pollutants the methods must meet the lowest minimum levels (MLs) specified in Attachment 4 of the SIP,
where no methods are specified for a given pollutant, by methods approved by this Regional Water Board or the State Water Board.
[2] Acute toxicity shall be conducted in accordance with Section IV.A of this Monitoring and Reporting Program.

often than twice the frequencies listed in the schedule.

IV. WHOLE EFFLUENT TOXICITY (WET) TESTING REQUIREMENTS

A. Acute Toxicity Testing.

The Discharger shall conduct acute toxicity testing to determine whether the effluent is contributing acute toxicity to the receiving water. The Discharger shall meet the following acute toxicity testing requirements:

1. *Monitoring Frequency* – the Discharger shall perform annual acute toxicity testing.

2. *Sample Types* – For static non-renewal and static renewal testing, the samples shall be 24-hour, flow-proportional composites and shall be representative of the volume and quality of the discharge. The effluent samples shall be taken at the effluent monitoring location EFF-001.

3. *Test Species* – Test species shall be larval stage (0 to 14 days old) rainbow trout (*Oncorhynchus mykiss*) *or* fathead minnows (*Pimephales promelas*).

4. *Methods* – The acute bioassays tests shall be conducted in accordance with EPA-821-R-02-012, Fifth Edition, or later amendment with Executive Officer approval. Temperature, total residual chlorine, ammonia, and pH shall be recorded at the time of sample collection. No pH adjustment may be made unless approved by the Executive Officer.

5. *Test Failure* – If an acute toxicity test does not meet all test acceptability criteria, as specified in the test method, the Discharger must re-sample and re-test as soon as possible, not to exceed seven (7) business days following notification of test failure.

B. Chronic Toxicity Testing.

The Discharger shall conduct three species chronic toxicity testing to determine whether the effluent is contributing chronic toxicity to the receiving water. The Discharger shall meet the following chronic toxicity testing requirements:

1. *Monitoring Frequency* – the Discharger shall perform three-species, chronic toxicity testing once, in the second, third, or fourth year of the permit cycle.

2. *Sample Types* – Effluent samples shall be 24-hour, flow-proportional composites and shall be representative of the volume and quality of the discharge. The effluent samples shall be taken at the effluent monitoring location specified in the MRP. The receiving water control shall be a grab sample obtained from the R-001 sampling location, as identified in this MRP.

3. *Sample Volumes* – Adequate sample volumes shall be collected to provide renewal water to complete the test in the event that the discharge is intermittent.

4. *Test Species* – Chronic toxicity testing measures sublethal (e.g. reduced growth, reproduction) and/or lethal effects to test organisms exposed to an effluent compared to that of the control organisms. The Discharger shall conduct chronic toxicity tests with:

   a. The cladoceran, water flea, *Ceriodaphnia dubia* (survival and reproduction test);

   b. The fathead minnow, *Pimephales promelas* (larval survival and growth test); and

   c. The green alga, *Selenastrum capricornutum* (growth test).

5. *Methods* – The presence of chronic toxicity shall be estimated as specified in *Short-term Methods for Estimating the Chronic Toxicity of Effluents and Receiving Waters to Freshwater Organisms, Fourth Edition,* EPA/821-R-02-013, October 2002, or later amendment with Executive Officer approval.

6. *Reference Toxicant* – As required by the SIP, all chronic toxicity tests shall be conducted with concurrent testing with a reference toxicant and shall be reported with the chronic toxicity test results.

7. *Dilutions* – The chronic toxicity testing shall be performed using the dilution series identified in Table E-1, below. The receiving water control shall be used as the diluent (unless the receiving water is toxic).

Table E-1 Chronic Toxicity Testing Dilution Series

Sample	Dilutions (%)					Controls	
	100	75	50	25	12.5	Receiving Water	Laboratory Water
% Effluent	100	75	50	25	12.5	0	0
% Receiving Water	0	25	50	75	87.5	100	0
% Laboratory Water	0	0	0	0	0	0	100

8. *Test Failure* –The Discharger must re-sample and re-test as soon as possible, but no later than fourteen (14) days after receiving notification of a test failure. A test failure is defined as follows:

   a. The reference toxicant test or the effluent test does not meet all test acceptability criteria as specified in the *Short-term Methods for Estimating the Chronic Toxicity of Effluents and Receiving Waters to Freshwater Organisms, Fourth Edition*, EPA/821-R-02-013, October 2002 (Method Manual), and its subsequent amendments or revisions; or

b. The percent minimum significant difference (PMSD) measured for the test exceeds the upper PMSD bound variability criterion in Table 6 on page 52 of the Method Manual.

C. WET Testing Notification Requirements

The Discharger shall notify the Regional Water Board within 24 hours after the receipt of test results exceeding the monitoring trigger during regular or accelerated monitoring, or an exceedance of the acute toxicity effluent limitation.

D. WET Testing Reporting Requirements

All toxicity test reports shall include the contracting laboratory's complete report provided to the Discharger and shall be in accordance with the appropriate "Report Preparation and Test Review" sections of the method manuals. At a minimum, WET monitoring shall be reported as follows:

1. **Chronic WET Reporting.** Regular chronic toxicity monitoring results shall be reported to the Regional Water Board within 30 days following completion of the test, and shall contain, at minimum:

   a. The results expressed in TUc, measured as 100/NOEC, and also measured as $100/LC_{50}$, $100/EC_{25}$, $100/IC_{25}$, and $100/IC_{50}$, as appropriate.

   b. The statistical methods used to calculate endpoints;

   c. The statistical output page, which includes the calculation of the percent minimum significant difference (PMSD);

   d. The dates of sample collection and initiation of each toxicity test; and

   e. The results compared to the numeric toxicity monitoring trigger.

   Additionally, the monthly discharger self-monitoring reports shall contain an updated chronology of chronic toxicity test results expressed in TUc, and organized by test species, type of test (survival, growth or reproduction), and monitoring frequency, i.e., either quarterly, monthly, accelerated, or TRE.

2. **Acute WET Reporting.** Acute toxicity test results shall be submitted with the monthly discharger self-monitoring reports and reported as percent survival.

3. **TRE Reporting.** Reports for Toxicity Reduction Evaluations shall be submitted in accordance with the schedule contained in the Discharger's approved TRE Work Plan.

4. **Quality Assurance (QA).** The Discharger must provide the following information for QA purposes:

a. Results of the applicable reference toxicant data with the statistical output page giving the species, NOEC, LOEC, type of toxicant, dilution water used, concentrations used, PMSD, and dates tested.

b. The reference toxicant control charts for each endpoint, which include summaries of reference toxicant tests performed by the contracting laboratory.

c. Any information on deviations or problems encountered and how they were dealt with.

V. LAND DISCHARGE MONITORING REQUIREMENTS – NOT APPLICABLE

VI. RECLAMATION MONITORING REQUIREMENTS – NOT APPLICABLE

VII. RECEIVING WATER MONITORING REQUIREMENTS – SURFACE WATER

A. Monitoring Locations R-001 and R-002

1. The Discharger shall monitor Clear Creek at R-001 and R-002 as follows:

Parameter	Units	Sample Type	Minimum Sampling Frequency	Required Analytical Test Method
pH	standard units	Grab	Weekly	[1]
Hardness (R-1 only)	mg/L	Grab	Quarterly (R-1 only)	[1]
Turbidity	NTU	Grab	Weekly	[1]
Chlorine, Total Residual	mg/L	Grab	Weekly	[1]

In conducting the receiving water sampling, a log shall be kept of the receiving water conditions throughout the reach bounded by Stations R-00l and R-002. Attention shall be given to the presence or absence of:

a. Floating or suspended matter
b. Discoloration
c. Bottom deposits
d. Aquatic life
e. Visible films, sheens or coatings
f. Fungi, slimes, or objectionable growths
g. Potential nuisance conditions

Notes on receiving water conditions shall be summarized in the monitoring report.

[1] Pollutants shall be analyzed using the analytical methods described in 40 CFR sections 136, where no methods are specified for a given pollutant, by methods approved by this Regional Water Board or the State Water Board.

VIII. OTHER MONITORING REQUIREMENTS

A. Sludge Monitoring—Monitoring Location PND-001, PND-002, and PND-003

Within 180 days from the effective date of this Order the Discharger shall submit an update of the sludge disposal plan, which shall include the following:

1. Estimate of average annual sludge production in dry tons and percent solids.

2. Description of sludge storage and alternative uses (if applicable) to disposal.

3. A description of disposal methods.

   a. For landfill disposal, include:

      i. the Regional Water Board's waste discharge requirements numbers that regulate the landfill(s) used;
      ii. the present classifications of the landfill(s) used; and
      iii. the names and locations of the facilities receiving sludge.

   b. For land application, include:

      i. the location of the site(s);
      ii. the Regional Water Board's waste discharge requirements numbers that regulate the site(s), if applicable; and
      iii. the application rate in lbs/acre/year (specify wet or dry); and
      iv. subsequent uses of the land.

   c. For incineration, include:

      i. the names and locations of the site(s) where sludge incineration occurs
      ii. the Regional Water Board's waste discharge requirements numbers that regulate the site(s);
      iii. the ash disposal method; and
      iv. the names and locations of facilities receiving ash (if applicable).

4. A representative characterization of sludge quality including sludge percent solids and quantitative results of chemical analyses for the Title 22 metals.

5. Status and proposed time schedule for disposal of sludge described below.

   a. Water treatment plant sludge – settling pond number 1.
   b. Water treatment plant sludge – settling pond number 2.
   c. Water treatment plant sludge – settling pond number 3.

B. Low Threat Discharges—Monitoring Locations EFF-001A

Low threat discharge monitoring locations shall be modified as new low threat discharges from the Facility are identified.

1. **Monitoring Locations EFF-001A**

Samples shall be collected when there is a low threat discharge as described in Low Threat Discharge Requirements Section VI.C.6.b of this Order. The Discharger shall monitor low threat discharges at monitoring locations EFF-001A as follows:

Parameter	Units	Sample Type	Minimum Sampling Frequency	Required Analytical Test Method
Flow	mgd	Grab	In accordance with Low Threat Discharge Requirements Section VI.C.6.b of this Order.	[1]
Settleable Solids	mL/L-hr	Grab		[1]
Total Suspended Solids	mg/L	Grab		[1]
Chlorine, Total Residual	mg/L	Grab		[1]

The Discharger shall make a record of each discharge event. The record shall include:

a. Date;
b. Time;
c. Location;
d. Duration of the discharge event;
e. Source of the water being discharged;
f. A measurement or estimate of the total flow volume;
g. Observations as to the appearance of the discharge and erosion that resulted;
h. Best Management Practices that were used; and
i. Analyses performed, if any.

When analytical results are received, they shall be included in the record.

Analyses and observations shall be recorded and reported to the Regional Water Board in a timely manner within the monthly Self-Monitoring Reports. Reporting shall also identify any violations of this Order, corrective action steps taken to comply with the Order, and complaints received from neighbors or other interested parties.

[1] Pollutants shall be analyzed using the analytical methods described in 40 CFR 136, where no methods are specified for a given pollutant, by methods approved by this Regional Water Board or the State Water Board.

IX. REPORTING REQUIREMENTS

A. General Monitoring and Reporting Requirements

1. The Discharger shall comply with all Standard Provisions (Attachment D) related to monitoring, reporting, and recordkeeping.

2. In reporting the monitoring data, the Discharger shall arrange the data in tabular form so that the date, the constituents, and the reported analytical result are readily discernible. The data shall be summarized in such a manner to clearly illustrate whether the discharge complies with waste discharge requirements. Monthly maximums, minimums, and averages shall be reported for each monitored constituent and parameter. Removal efficiencies (%) for biochemical oxygen demand and total suspended solids shall also be calculated and reported.

3. With the exception of flow, all constituents monitored on a continuous basis (metered), shall be reported as daily maximums, daily minimums, and daily averages; flow shall be reported as the total volume discharged per day for each day of discharge.

B. Self Monitoring Reports (SMRs)

1. At any time during the term of this permit, the State Water Board or Regional Water Board may notify the Discharger to electronically submit Self-Monitoring Reports (SMRs) using the State Water Board's California Integrated Water Quality System (CIWQS) Program Web site (http://www.waterboards.ca.gov/ciwqs/index.html). Until such notification is given, the Discharger shall submit hard copy SMRs in accordance with the requirements described in subsection B.5 below. The CIWQS Web site will provide additional directions for SMR submittal in the event there will be service interruption for electronic submittal.

2. The Discharger shall report in the SMR the results for all monitoring specified in this MRP under sections III through IX. Additionally, the Discharger shall report in the SMR the results of any **special studies, technical reports, or monitoring requirements** required by Special Provisions – VI.C.2 of this Order. The Discharger shall submit **monthly** SMRs including the results of all required monitoring using USEPA-approved test methods or other test methods specified in this Order. If the Discharger monitors any pollutant more frequently than required by this Order, the results of this monitoring shall be included in the calculations and reporting of the data submitted in the SMR.

3. Monitoring periods and reporting for all required monitoring shall be completed according to the following schedule:

Sampling Frequency	Monitoring Period Begins On…	Monitoring Period	SMR Due Date
Continuous	Permit effective date	All	Submit with monthly SMR

Daily	Permit effective date	(Midnight through 11:59 PM) or any 24-hour period that reasonably represents a calendar day for purposes of sampling.	Submit with monthly SMR
Weekly	Sunday following permit effective date or on permit effective date if on a Sunday	Sunday through Saturday	Submit with monthly SMR
Monthly	First day of calendar month following permit effective date or on permit effective date if that date is first day of the month	1st day of calendar month through last day of calendar month	30 days from the end of the monitoring period
Quarterly	Closest of January 1, April 1, July 1, or October 1 following (or on) permit effective date	January 1 through March 31 April 1 through June 30 July 1 through September 30 October 1 through December 31	30 days from the end of the monitoring period
Semiannually	Closest of January 1 or July 1 following (or on) permit effective date	January 1 through June 30 July 1 through December 31	30 days from the end of the monitoring period
Annually	January 1 following (or on) permit effective date	January 1 through December 31	30 days from the end of the monitoring period
1 / Permit Lifecycle	Permit effective date	one time in the 2nd, 3rd, or 4th year of the permit cycle	30 days from the end of the monitoring period

4. Reporting Protocols. The Discharger shall report with each sample result the applicable Reporting Level (RL) and the current Method Detection Limit (MDL), as determined by the procedure in 40 CFR Part 136.

   The Discharger shall report the results of analytical determinations for the presence of chemical constituents in a sample using the following reporting protocols:

   a. Sample results greater than or equal to the RL shall be reported as measured by the laboratory (*i.e.*, the measured chemical concentration in the sample).

   b. Sample results less than the RL, but greater than or equal to the laboratory's MDL, shall be reported as "Detected, but Not Quantified," or DNQ. The estimated chemical concentration of the sample shall also be reported.

      For the purposes of data collection, the laboratory shall write the estimated chemical concentration next to DNQ as well as the words "Estimated Concentration" (may be shortened to "Est. Conc."). The laboratory may, if such information is available, include numerical estimates of the data quality for the reported result. Numerical estimates of data quality may be percent accuracy ($\pm$ a percentage of the reported value), numerical ranges (low to high), or any other means considered appropriate by the laboratory.

   c. Sample results less than the laboratory's MDL shall be reported as "Not Detected," or ND.

   d. Dischargers are to instruct laboratories to establish calibration standards so that the ML value (or its equivalent if there is differential treatment of samples relative to calibration standards) is the lowest calibration standard. At no time is the Discharger to use analytical data derived from *extrapolation* beyond the lowest point of the calibration curve.

5. The Discharger shall submit hard copy SMRs (with an original signature) when required by subsection B.1 above in accordance with the following requirements:

   a. The Discharger shall arrange all reported data in a tabular format. The data shall be summarized to clearly illustrate whether the facility is operating in compliance with interim and/or final effluent limitations.

   b. The Discharger shall attach a cover letter to the SMR. The information contained in the cover letter shall clearly identify violations of the waste discharge requirements; discuss corrective actions taken or planned; and the proposed time schedule for corrective actions. Identified violations must include a description of the requirement that was violated and a description of the violation.

   c. SMRs must be submitted to the Regional Water Board, signed and certified as required by the Standard Provisions (Attachment D), to the address listed below:

      California Regional Water Quality Control Board
      Central Valley Region
      415 Knollcrest Drive, Suite 100
      Redding, CA 96002

C. Discharge Monitoring Reports (DMRs) – Not Applicable

D. Other Reports

1. By **1 February** of each year, the Discharger shall submit a written report to the Executive Officer containing the following:

   a. The names, certificate grades, and general responsibilities of all persons employed at the Facility.

   b. The names and telephone numbers of persons to contact regarding the plant for emergency and routine situations.

   c. A statement certifying when the flow meter and other monitoring instruments and devices were last calibrated, including identification of who performed the calibration.

   d. A statement certifying whether the current operation and maintenance manual, and contingency plan, reflect the water treatment plant as currently constructed and operated, and the dates when these documents were last revised and last reviewed for adequacy.

   e. The Discharger may also be requested to submit an annual report to the Regional Water Board with both tabular and graphical summaries of the monitoring data obtained during the previous year. Any such request shall be made in writing. The report shall discuss the compliance record. If violations have occurred, the report

shall also discuss the corrective actions taken and planned to bring the discharge into full compliance with the waste discharge requirements.

Attachment F – Fact Sheet – Table of Contents

Attachment F – Fact Sheet F-17
I. Permit Information F-17
II. Facility Description F-18
- **A.** Description of Wastewater Treatment or Controls F-18
- **B.** Discharge Points and Receiving Waters F-19
- **C.** Summary of Existing Requirements and Self-Monitoring Report (SMR) Data F-19
- **D.** Compliance Summary F-20
- **E.** Planned Changes F-20

III. Applicable Plans, Policies, and Regulations F-20
- **A.** Legal Authorities F-20
- **B.** California Environmental Quality Act (CEQA) F-20
- **C.** State and Federal Regulations, Policies, and Plans F-20
- **D.** Impaired Water Bodies on CWA 303(d) List F-24
- **E.** Other Plans, Policies, and Regulations – Not Applicable F-24

IV. Rationale For Effluent Limitations and Discharge Specifications F-25
- **A.** Discharge Prohibitions F-26
- **B.** Technology-Based Effluent Limitations F-26
  1. Scope and Authority F-26
  2. Applicable Technology-Based Effluent Limitations F-26
- **C.** Water Quality-Based Effluent Limitations (WQBELs) F-28
  1. Scope and Authority F-28
  2. Applicable Beneficial Uses and Water Quality Criteria and Objectives F-28
  3. Determining the Need for WQBELs F-30
  4. WQBEL Calculations F-33
  5. Whole Effluent Toxicity (WET) F-37
- **D.** Final Effluent Limitations F-38
- **E.** Interim Effluent Limitations - Not Applicable F-40
- **F.** Land Discharge Specifications – Not Applicable F-40
- **G.** Reclamation Specifications – Not Applicable F-40

V. Rationale for Receiving Water Limitations F-40
- **A.** Surface Water F-40
- **B.** Groundwater – Not Applicable F-41

VI. Rationale for Monitoring and Reporting Requirements F-41
- **A.** Influent Monitoring – Not Applicable F-41
- **B.** Effluent Monitoring F-41
- **C.** Whole Effluent Toxicity Testing Requirements F-42
- **D.** Receiving Water Monitoring F-42
  1. Surface Water F-42
  2. Groundwater – Not Applicable F-42
- **E.** Other Monitoring Requirements F-43

VII. Rationale for Provisions F-43
- **A.** Standard Provisions F-43
- **B.** Special Provisions F-43
  1. Reopener Provisions F-43
  2. Special Studies and Additional Monitoring Requirements F-44

3. Best Management Practices and Pollution Prevention – Not Applicable F-44
4. Construction, Operation, and Maintenance Specifications – Not Applicable F-44
5. Special Provisions for Municipal Facilities (POTWs Only) – Not Applicable F-44
6. Other Special Provisions F-44
7. Compliance Schedules - Not Applicable F-46
VIII. Public Participation F-46
A. Notification of Interested Parties F-46
B. Written Comments F-46
C. Public Hearing F-46
D. Waste Discharge Requirements Petitions F-47
E. Information and Copying F-47
F. Register of Interested Persons F-47
G. Additional Information F-47

ATTACHMENT F – FACT SHEET

As described in Section II of this Order, this Fact Sheet includes the legal requirements and technical rationale that serve as the basis for the requirements of this Order.

This renewed Order regulates the discharge of up to 1.5 million gallons per day (mgd) of effluent from the Clear Creek Community Services District Water Treatment Plant. This Order includes effluent, groundwater, sludge, and surface water limitations, monitoring and reporting requirements, additional study requirements, and reopener provisions for effluent and groundwater constituents.

I. PERMIT INFORMATION

The following table summarizes administrative information related to the facility.

WDID	5A450120001
Discharger	Clear Creek Community Services District
Name of Facility	Clear Creek Community Services District Water Treatment Plant
Facility Address	Paige Bar Road
	Igo, California 96047
	Shasta County
Facility Contact, Title and Phone	Ronald Carlin, Filter Plant Supervisor, (530) 357-2121
Authorized Person to Sign and Submit Reports	Ronald Carlin, Filter Plant Supervisor, (530) 357-2121
Mailing Address	5880 Oak Street, Anderson, CA 96007
Billing Address	SAME
Type of Facility	Water Treatment Plant/Water Supply, SIC Code: 4941
Major or Minor Facility	Minor
Threat to Water Quality	3
Complexity	B
Pretreatment Program	Not Applicable
Reclamation Requirements	Not Applicable
Facility Permitted Flow	1.5 million gallons per day
Facility Design Flow	1.5 million gallons per day
Watershed	Shasta Bally Hydrologic Unit, Clear Creek Hydrologic Area, Kanaka Peak Hydrologic Sub-area (524.62)
Receiving Water	Clear Creek
Receiving Water Type	Creek

A. Clear Creek Community Services District (hereinafter Discharger) is the owner and operator of the Clear Creek Community Services District Water Treatment Plant (hereinafter Facility).

B. The Facility discharges wastewater to an unnamed tributary to Clear Creek, a water of the United States and is currently regulated by Order 5-01-081 which was adopted on 27 April 2001 and was to expire on 1 April 2006. The terms of the existing Order automatically continued in effect

after the permit expiration date.

C. The Discharger filed a report of waste discharge and submitted an application for renewal of its Waste Discharge Requirements (WDRs) and National Pollutant Discharge Elimination System (NPDES) permit on 10 March 2006. A site visit was conducted on 8 February 2006, to observe operations and collect additional data to develop permit limitations and conditions.

II. FACILITY DESCRIPTION

The Discharger provides potable water to domestic and agricultural customers in service areas of Clear Creek Community Services District and the Centerville Community Services District. The Facility is located below Whiskeytown Dam on Paige Bar Road in Section 27, Township 32 North, and Range 6 West of the Mount Diablo Baseline and Meridian as shown on Attachment B, a part of this Order. The Facility is within the Shasta Bally Hydrologic Unit, Clear Creek Hydrologic Area, Kanaka Peak Hydrologic Sub-area (524.62), as depicted on interagency hydrologic maps prepared by the California Department of Water Resources (DWR) in August 1986.

Raw water is piped via a 45-inch raw water supply line tapped directly into the Whiskeytown Dam water outlet works to the Facility where it receives treatment. The Facility treatment system consists of raw water chlorination, coagulation, filtration through eight horizontal, multi-cell pressure filters and post chlorination. Post chlorination is adjusted to a level that achieves the required chlorine residual in the potable water distribution system.

A. Description of Wastewater Treatment or Controls

1. In the process of generating potable water, the Facility generates treated wastewater comprised of settled filter backwash water from periodic backwashing of filters to remove captured turbidity. The Facility's filter vessels contain anthracite coal, sand, and support media. The filter backwash water is routed to any of the three filter backwash settling ponds prior to discharge to Clear Creek.

2. Immediately following a backwash cycle, a filter is not capable of providing the required filtering efficiency. Therefore, the first flow of water through a newly backwashed filter (rinse water) is diverted to a basin providing temporary storage until the rinse water can be pumped into the Facility's raw water supply feed. In the event that rinse water basin is overfilled, an overflow system allows excess rinse water to be delivered to the lower filter backwash settling pond.

3. Discharges are made from the backwash settling ponds in two ways. During normal operating conditions, a floating outlet at the west end of each pond drains water from the top few inches of the pond surface into the 12-inch drain pipe connected to the three ponds. The drain pipe leads to a drainage channel that flows into Clear Creek after a short distance. The floating pond outlets are not equipped with flow meters, but hydraulic calculations based on the geometry of the discharge piping indicate typical flows of approximately 50 to 100 gallons per minute from each pond. Typically, only one pond discharges at a time. If the flow rate through the floating outlet is not adequate to prevent the water level in a pond from

reaching the overflow elevation, then larger capacity discharge piping allows the water above the overflow elevation to drain into the 12-inch pipe. Discharges from the 12-inch pipe to the drainage channel are not directly metered; however, filter backwash information can be used to determine the flow rate into the settling ponds and the net flow of the ponds to Clear Creek.

4. Sludge is removed from the backwash settling ponds by dewatering ponds, air drying the sludge, and then excavating the sludge out and disposing it at Shasta County landfill.

B. Discharge Points and Receiving Waters

1. The drinking water treatment plant is in Sections 27, T32N, R6W, MDB&M, as shown on Attachment B, a part of this Order. Treated wastewater is discharged to Clear Creek, a water of the United States and a tributary to Sacramento River, at the Discharge Point 001, latitude 40, 35, 53 (deg, min, sec) N and longitude 122, 32, 17 (deg, min, sec) W.

C. Summary of Existing Requirements and Self-Monitoring Report (SMR) Data

1. Effluent limitations contained in the existing Order for discharges from Discharge Point 001 (Monitoring Location EFF-001) and representative monitoring data from the term of the Order No. 5-01-081 are as follows:

Parameter (units)	Effluent Limitation		Monitoring Data (May 2001 – September 2005)	
	Monthly Average	Maximum Daily	Highest Monthly Average Discharge	Highest Daily Discharge
Flow (mgd)	--	2.6	--	0.474
pH (standard unit)	--	[6.0 , 9.0] [1]	--	[6.8 , 7.32] [1]
Settleable Solids (ml/L)	0.1	0.2	Not Detected	Not Detected
Chlorine, Total Residual (mg/L)	--	0.02 [2]	--	0.03 [2]

2. The Report of Waste Discharge describes the filter backwash water discharge as follows:

Average Flow:	0.100	mgd
Daily Peak Dry Weather Flow:	0.3	mgd
Daily Peak Wet Weather Flow:	0.065	mgd
Temperature, Summer:	29.44	ºC
Temperature, Winter:	1.66	ºC

[1] Instantaneous minimum-maximum range.
[2] One-hour average.

D. Compliance Summary

Monitoring data submitted by the Discharger from May 2001 through September 2005 revealed only one exceedance of limitations set by Order No. 5-01-081. On November 10, 2003 a Total Chlorine Residual concentration of 0.03 mg/L exceeded the one-hour average Total Chlorine Residual limitation of 0.02 mg/L.

E. Planned Changes

Currently, the normal plant potable water flows range from 2 mgd in winter months to 20 mgd in summer months. Total hydraulic capacity of the plant is 33 mgd, with a nominal net treat water capacity of 25 mgd. The Facility plans to expand the plant capacity to 44 mgd. According to the Discharger, all the settling ponds are designed to accommodate the planned increase capacity. The Discharger must submit a Report of Waste Discharge, including supporting technical information, for the expansion at least 140 days prior to any change in discharge.

III. APPLICABLE PLANS, POLICIES, AND REGULATIONS

The requirements contained in the proposed Order are based on the requirements and authorities described in this section.

A. Legal Authorities

This Order is issued pursuant to section 402 of the Federal Clean Water Act (CWA) and implementing regulations adopted by the U.S. Environmental Protection Agency (USEPA) and Chapter 5.5, Division 7 of the California Water Code (CWC). It shall serve as a NPDES permit for point source discharges from this facility to surface waters. This Order also serves as Waste Discharge Requirements (WDRs) pursuant to Article 4, Chapter 4 of the CWC for discharges that are not subject to regulation under CWA section 402.

B. California Environmental Quality Act (CEQA)

The action to adopt an NPDES permit is exempt from the provisions of Chapter 3 of the CEQA (Public Resources Code Section 21000, *et seq*.), requiring preparation of an environmental impact report or negative declaration in accordance with Section 13389 of the CWC.

C. State and Federal Regulations, Policies, and Plans

1. **Water Quality Control Plans**. The Regional Water Board adopted a *Water Quality Control Plan, Fourth Edition,* for the *Sacramento and San Joaquin River Basins* (hereinafter Basin Plan) that designates beneficial uses, establishes water quality objectives, and contains implementation programs and policies to achieve those objectives for all waters addressed through the plan. In addition, State Water Resources Control Board (State Water Board) Resolution No. 88-63 requires that, with certain exceptions, the Regional Water Board assign the municipal and domestic supply use to water bodies that do not have beneficial uses listed in the Basin Plan.

The Basin Plan at page II-2.00 states that the "…*beneficial uses of any specifically identified water body generally apply to its tributary streams*." The Basin Plan identifies beneficial uses for Clear Creek. These beneficial uses are as follows: municipal and domestic supply; agricultural supply, including stock watering; water contact recreation, including canoeing and rafting; non-contact water recreation, including aesthetic enjoyment; warm freshwater habitat; cold freshwater habitat; cold migration of aquatic organisms; warm spawning, reproduction, and/or early development; cold spawning, reproduction, and /or early development; and wildlife habitat. Beneficial uses applicable to the unnamed tributary to Clear Creek are as follows:

Discharge Point	Receiving Water Name	Beneficial Use(s)
001	Clear Creek	Existing: municipal and domestic supply (MUN); agricultural supply, including stock watering (AGR); water contact recreation, including canoeing and rafting (REC-1); non-contact water recreation, including aesthetic enjoyment (REC-2); warm freshwater habitat (WARM); cold freshwater habitat (COLD); cold migration of aquatic organisms (MGR); warm spawning, reproduction, and/or early development (SPWN); cold spawning, reproduction, and /or early development (SPWN); and wildlife habitat (WILD). Groundwater: MUN; AGR; IND; and PRO.

The Basin Plan on page II-1.00 states: "*Protection and enhancement of existing and potential beneficial uses are primary goals of water quality planning…" and with respect to disposal of wastewaters states that "...disposal of wastewaters is* [not] *a prohibited use of waters of the State; it is merely a use which cannot be satisfied to the detriment of beneficial uses*."

The federal CWA, Section 101(a)(2), states: "*it is the national goal that wherever attainable, an interim goal of water quality which provides for the protection and propagation of fish, shellfish, and wildlife, and for recreation in and on the water be achieved by July 1, 1983*." Federal Regulations, developed to implement the requirements of the CWA, create a rebuttable presumption that all waters be designated as fishable and swimable. Federal Regulations, 40 CFR §§ 131.2 and 131.10, require that all waters of the State be regulated to protect the beneficial uses of public water supply, protection and propagation of fish, shell fish and wildlife, recreation in and on the water, agricultural, industrial and other purposes including navigation. Section 131.3(e), 40 CFR, defines existing beneficial uses as those uses actually attained after 28 November 1975, whether or not they are included in the water quality standards. Federal Regulation, 40 CFR § 131.10, requires that uses be obtained by implementing effluent limitations, requires that all downstream uses be protected and states that in no case shall a state adopt waste transport or waste assimilation as a beneficial use for any waters of the United States.

In reviewing whether the existing and/or potential uses of Clear Creek are applicable, the Regional Water Board has considered the following facts:

a. Municipal and Domestic Supply and Agricultural Supply

The Regional Water Board is required to apply the beneficial uses of municipal and domestic supply to Clear Creek based on State Water Board Resolution No. 88-63 which was incorporated in the Basin Plan pursuant to Regional Water Board Resolution No. 89-056. In addition, the State Water Board has issued water rights to existing water users along Clear Creek downstream of the discharge for domestic and irrigation uses. Clear Creek provides groundwater recharge. The groundwater is a source of drinking water. In addition to the existing water uses, growth in the area, downstream of the discharge is expected to continue, which presents a potential for increased domestic and agricultural uses of the water in Clear Creek.

b. Water Contact and Noncontact Recreation and Esthetic Enjoyment

The Regional Water Board finds that the receiving water flows through residential areas, there is ready public access to Clear Creek, exclusion of the public is unrealistic and contact recreational activities currently exist along Clear Creek and downstream waters and these uses are likely to increase as the population in the area grows. Clear Creek flows through areas of general public access, meadows, residential areas, and parks. Clear Creek also offers recreational opportunities.

c. Groundwater Recharge

In areas where groundwater elevations are below the stream bottom, water from the stream will percolate to groundwater.

d. Freshwater Replenishment

Clear Creek has hydraulic continuity with the Sacramento River. Clear Creek adds to the water quantity and may impact the quality of water flowing in the Sacramento River.

e. Preservation and Enhancement of Fish, Wildlife, and Other Aquatic Resources

The California Department of Fish and Game (DFG) has verified that the fish species present in Clear Creek and downstream waters are consistent with both cold and warm water fisheries, that there is a potential for anadromous fish migration necessitating a cold water designation and that cold water species such as rainbow trout, Sacramento suckers, pike minnows, to name a few, have been found downstream of the water treatment plant. The Basin Plan (Table II-1) designates the Clear Creek as being both a cold and warm freshwater habitat. Therefore, pursuant to the Basin Plan (Table II-1, Footnote (2)), the cold designation applies to the unnamed tributary to Clear Creek. The cold-water habitat designation necessitates that the in-stream dissolved oxygen concentration be maintained at, or above, 7.0 mg/L.

Upon review of the flow conditions, habitat values, and beneficial uses of Clear Creek, and the facts described above, the Regional Water Board finds that the beneficial uses identified in the Basin Plan for Clear Creek are applicable.

2. ***National Toxics Rule (NTR) and California Toxics Rule (CTR).*** USEPA adopted the NTR on 22 December 1992, which was amended on 4 May 1995 and 9 November 1999, and the CTR on 18 May 2000, which was amended on 13 February 2001. These rules include water quality criteria for priority pollutants and are applicable to this discharge.

3. ***State Implementation Policy.*** On 2 March 2000, State Water Board adopted the *Policy for Implementation of Toxics Standards for Inland Surface Waters, Enclosed Bays, and Estuaries of California* (State Implementation Policy or SIP*)*. The SIP became effective on 28 April 2000, with respect to the priority pollutant criteria promulgated for California by the USEPA through the NTR and to the priority pollutant objectives established by the Regional Water Board in the Basin Plan. The SIP became effective on 18 May 2000 with respect to the priority pollutant criteria promulgated by the USEPA through the CTR. The State Water Board adopted amendments to the SIP on 24 February 2005 that became effective on 13 July 2005.

4. ***Alaska Rule.*** On 30 March 2000, USEPA revised its regulation that specifies when new and revised State and Tribal water quality standards (WQS) become effective for CWA purposes (40 CFR 131.21, 65 FR 24641, 27 April 2000). Under the revised regulation (also known as the Alaska rule), new and revised standards submitted to USEPA after 30 May 2000, must be approved by USEPA before being used for CWA purposes. The final rule also provides that standards already in effect and submitted to USEPA by 30 May 2000, may be used for CWA purposes, whether or not approved by USEPA.

5. ***Stringency of Requirements for Individual Pollutants.*** This Order contains restrictions on individual pollutants that are no more stringent than required by the federal CWA. Individual pollutant restrictions consist of technology-based restrictions and water quality-based effluent limitations. The technology-based effluent limitations consist of restrictions on settleable solids and total suspended solids (TSS). Restrictions on settleable solids and TSS are specified in federal regulations as discussed in Finding F, and the permit's technology-based pollutant restrictions are no more stringent than required by the CWA. Water quality-based effluent limitations have been scientifically derived to implement water quality objectives that protect beneficial uses. Both the beneficial uses and the water quality objectives have been approved pursuant to federal law and are the applicable federal water quality standards. To the extent that toxic pollutant water quality-based effluent limitations were derived from the CTR, the CTR is the applicable standard pursuant to 40 CFR 131.38. The scientific procedures for calculating the individual water quality-based effluent limitations are based on the CTR-SIP, which was approved by USEPA on 18 May 2000. All beneficial uses and water quality objectives contained in the Basin Plan were approved under state law and submitted to and approved by USEPA prior to 30 May 2000. Any water quality objectives and beneficial uses submitted to USEPA prior to 30 May 2000, but not approved by USEPA before that date, are nonetheless "*applicable water quality standards for purposes of the CWA*" pursuant to 40 CFR 131.21(c)(1). Collectively, this Order's restrictions on individual pollutants are no more stringent than required to implement the

technology-based requirements of the CWA and the applicable water quality standards for purposes of the CWA.

6. ***Antidegradation Policy.*** Section 131.12 of 40 CFR requires that State water quality standards include an antidegradation policy consistent with the federal policy. The State Water Board established California's antidegradation policy in State Water Board Resolution 68-16, which incorporates the requirements of the federal antidegradation policy. Resolution 68-16 requires that existing water quality is maintained unless degradation is justified based on specific findings. As discussed in detail in this Fact Sheet, the permitted discharge is consistent with the antidegradation provision of 40 CFR §131.12 and State Water Board Resolution 68-16. Compliance with these requirements will result in the use of best practicable treatment or control of the discharge. The impact on existing water quality will be insignificant.

7. ***Anti-Backsliding Requirements.*** Sections 402(o)(2) and 303(d)(4) of the CWA and 40 CFR §122.44(l) prohibit backsliding in NPDES permits. These anti-backsliding provisions require that effluent limitations in a reissued permit must be as stringent as those in the previous permit, with some exceptions in which limitations may be relaxed. All effluent limitations in the Order are at least as stringent as the effluent limitations in the previous Order.

8. ***Monitoring and Reporting Requirements.*** Section 122.48 of 40 CFR requires that all NPDES permits specify requirements for recording and reporting monitoring results. Sections 13267 and 13383 of the CWC authorize the Regional Water Board to require technical and monitoring reports. The Monitoring and Reporting Program (MRP) establishes monitoring and reporting requirements to implement federal and State requirements. This MRP is provided in Attachment E.

9. ***Stormwater Requirements.*** USEPA promulgated Federal Regulations for storm water on 16 November 1990 in 40 CFR Parts 122, 123, and 124. The NPDES Industrial Storm Water Program regulates storm water discharges from industrial activities. Water treatment plants are not applicable industries under the stormwater program and are not required to seek coverage under the stormwater program.

D. Impaired Water Bodies on CWA 303(d) List

1. The Basin Plan includes a list of Water Quality Limited Segments (WQLSs), which are defined as "*…those sections of lakes, streams, rivers or other fresh water bodies where water quality does not meet (or is not expected to meet) water quality standards even after the application of appropriate limitations for point sources (40 CFR 130, et seq.).*" The Basin Plan also states, "*Additional treatment beyond minimum federal standards will be imposed on dischargers to WQLSs. Dischargers will be assigned or allocated a maximum allowable load of critical pollutants so that water quality objectives can be met in the segment*." Clear Creek is not listed as an impaired water body.

E. Other Plans, Policies, and Regulations – Not Applicable

IV. RATIONALE FOR EFFLUENT LIMITATIONS AND DISCHARGE SPECIFICATIONS

Effluent limitations and toxic and pretreatment effluent standards established pursuant to Sections 301 (Effluent Limitations), 302 (Water Quality Related Effluent Limitations), 304 (Information and Guidelines), and 307 (Toxic and Pretreatment Effluent Standards) of the Clean Water Act (CWA) and amendments thereto are applicable to the discharge.

The Federal CWA mandates the implementation of effluent limitations that are as stringent as necessary to meet water quality standards established pursuant to state or federal law [33 U.S.C., § 1311(b)(1)(C); 40 CFR § 122.44(d)(1)]. NPDES permits must incorporate discharge limits necessary to ensure that water quality standards are met. This requirement applies to narrative criteria as well as to criteria specifying maximum amounts of particular pollutants. Pursuant to Federal Regulations, 40 CFR § 122.44(d)(1)(i), NPDES permits must contain limits that control all pollutants that "*are or may be discharged at a level which will cause, have the reasonable potential to cause, or contribute to an excursion above any state water quality standard, including state narrative criteria for water quality*." Federal Regulations, 40 CFR § 122.44(d)(1)(vi), further provide that "[w]*here a state has not established a water quality criterion for a specific chemical pollutant that is present in an effluent at a concentration that causes, has the reasonable potential to cause, or contributes to an excursion above a narrative criterion within an applicable State water quality standard, the permitting authority must establish effluent limits.*"

The CWA requires point source discharges to control the amount of conventional, non-conventional, and toxic pollutants that are discharged into the waters of the United States. The control of pollutants discharged is established through effluent limitations and other requirements in NPDES permits. There are two principal bases for effluent limitations: 40 CFR § 122.44(a) requires that permits include applicable technology-based limitations and standards, and 40 CFR § 122.44(d) requires that permits include water quality-based effluent limitations to attain and maintain applicable numeric and narrative water quality criteria to protect the beneficial uses of the receiving water where numeric water quality objectives have not been established. The Regional Water Board's Basin Plan, page IV-17.00 contains an implementation policy ("Policy for Application of Water Quality Objectives") that specifies that the Regional Water Board "*will, on a case-by-case basis, adopt numerical limitations in orders which will implement the narrative objectives*." This Policy complies with 40 CFR § 122.44(d)(1). With respect to narrative objectives, the Regional Water Board must establish effluent limitations using one or more of three specified sources, including (1) EPA's published water quality criteria, (2) a proposed state criterion (*i.e.*, water quality objective) or an explicit state policy interpreting its narrative water quality criteria (*i.e.*, the Regional Water Board's "Policy for Application of Water Quality Objectives")(40 CFR 122.44(d)(1) (vi) (A), (B) or (C)), or (3) an indicator parameter. The Basin Plan contains a narrative objective requiring that: "*All waters shall be maintained free of toxic substances in concentrations that produce detrimental physiological responses in human, plant, animal, or aquatic life*" (narrative toxicity objective). The Basin Plan requires the application of the most stringent objective necessary to ensure that surface water and groundwater do not contain chemical constituents, discoloration, toxic substances, radionuclides, or taste and odor producing substances that adversely affect beneficial uses. The Basin Plan states that material and relevant information, including numeric criteria, and recommendations from other agencies and scientific literature will be utilized in evaluating compliance with the narrative toxicity objective. The Basin Plan also limits chemical constituents in concentrations that adversely affect surface water

beneficial uses. For waters designated as municipal, the Basin Plan specifies that, at a minimum, waters shall not contain concentrations of constituents that exceed Maximum Contaminant Levels (MCL) of CCR Title 22. The Basin Plan further states that, to protect all beneficial uses, the Regional Water Board may apply limits more stringent than MCLs. When a reasonable potential exists for exceeding a narrative objective, Federal Regulations mandate numerical effluent limitations and the Basin Plan narrative criteria clearly establish a procedure for translating the narrative objectives into numerical effluent limitations.

A. Discharge Prohibitions

As stated in the Federal Standard Provisions (Attachment D), this Order prohibits bypass from any portion of the treatment facility. Federal Regulations, 40 CFR 122.41 (m), define "bypass" as the intentional diversion of waste streams from any portion of a treatment facility. This section of the Federal Regulations, 40 CFR 122.41 (m)(4), prohibits bypass unless it is unavoidable to prevent loss of life, personal injury, or severe property damage. In considering the Regional Water Board's prohibition of bypasses, the State Water Board adopted a precedential decision, Order No. WQO 2002-0015, which cites the Federal Regulations, 40 CFR 122.41(m), as allowing bypass only for essential maintenance to assure efficient operation. In the case of United States v. City of Toledo, Ohio (63 F. Supp 2d 834, N.D. Ohio 1999) the Federal Court ruled that "*any bypass which occurs because of inadequate plant capacity is unauthorized…to the extent that there are 'feasible alternatives', including the construction or installation of additional treatment capacity*".

B. Technology-Based Effluent Limitations

1. Scope and Authority

As specified in 40 CFR §122.44 (a)(1), technology-based effluent limitations (TBELs) shall be applied when applicable based on: effluent limitations and standards promulgated under section 301 of the CWA, new source performance standards promulgated under section 306 of CWA, effluent limitations determined on a case-by-case under section 402(a)(1) of CWA, or a combination of the three, in accordance with 40 CFR §125.3.

In cases where Effluent Limitation Guidelines are not available for, or do not regulate, a particular pollutant of concern, Best Professional Judgment (BPJ) limits are established. BPJ-based limits are technology-based limits derived on a case-by-case basis for non-municipal (industrial) facilities. BPJ is defined as the highest quality technical opinion developed by a permit writer after consideration of all reasonably available and pertinent data or information that forms the basis for the terms and conditions of an NPDES permit. Permit limits are generally set at the upper bounds of acceptable performance.

2. Applicable Technology-Based Effluent Limitations

a. **Flow.** Order No. 5-01-081 established a maximum daily discharge flow limitation of 2.6 mgd at Discharge Point 001. Based on new information and on the Discharger's application, the current effluent design flow of the water treatment plant is 1.5 mgd, the maximum controlled discharge rate from all settling ponds at the Facility combined. This

Order replaces the Order No. 5-01-081 maximum daily flow limitation with 1.5 mgd for discharge to Clear Creek.

Mass-based effluent limitations, when necessary, were calculated by multiplying the concentration limitation by the reasonable measure of actual flow of the Facility and the appropriate unit conversion factor. Based on flow monitoring data submitted by the Discharger from May 2001 through September 2005 and consistent with 40 CFR 120.45(b)(2)(i), the reasonable measure of actual flow for the Facility is 0.30 mgd. Assuming constant flow, the long-term average dry weather flow of 0.30 mgd is used as reasonable measure of actual flow due to great variability in the Facility's flow data. Unless otherwise noted, all mass limitations or mass emission rates (MERs) in this Order were calculated by multiplying the concentration limitation by the reasonable measure of actual flow and the appropriate unit conversion factor as follows:

MER = Concentration Limitation x 0.30 mgd x 8.34 (lb-L/mg-gal)

b. **Settleable Solids.** For inland surface waters, the Basin Plan states that "[w]*ater shall not contain substances in concentrations that result in the deposition of material that causes nuisance or adversely affects beneficial uses.*" Order No. 5-01-081 established effluent limitations for settleable solids which are TBELs for water treatment plants based on BPJ. This Order carries over the TBELs established by Order No. 5-01-081. These effluent limitations reflect removal efficiencies for properly designed, constructed, and operated water treatment systems.

Because the amount of settleable solids is measured in terms of volume per volume without a mass component, it is impracticable to calculate mass limitations for inclusion in this Order.

c. **Total Suspended Solids (TSS).** The Basin Plan includes a water quality objective that receiving waters not contain suspended material in concentrations that cause nuisance or adversely affect beneficial uses. This Order contains average monthly and maximum daily effluent limitations for TSS of 30 and 50 mg/L, respectively. The Regional Water Board has determined that TSS are more likely to be resuspended than settleable solids in the wastewater settling ponds before discharge, and therefore, TSS concentrations are more likely to vary in the discharge than concentrations of settleable solids.

To establish limitations for TSS, the Regional Water Board has examined several general permits, which regulate wastewater discharges from water treatment plants. A summary of these TSS limitations is presented in the table, below.

TSS Effluent Limitations for General Permits			
State	**Average Monthly**	**Average Weekly**	**Maximum Daily**
Arkansas	20	No Limit	30
California (Regional Water Board 2)	30	45	No Limit
Massachusetts	30	No Limit	50
New Hampshire	20	No Limit	50
South Carolina	30	No Limit	60

Washington [1]	No Limit	No Limit	No Limit
West Virginia	30	No Limit	60

[1] Settleable solids, not TSS, is limited.

The Regional Water Board has also relied on research performed for the USEPA in 1987. (SAIC, Model Permit Package for the Water Supply Industry, EPA Contract No. 68-01-7043) This study found that 76 percent of water treatment plants surveyed used sedimentation lagoons for wastewater treatment. In these facilities, limitations of 30 mg/L and 45 mg/L were representative of the, then, current permitting practice for average monthly and maximum daily TSS limitations, respectively. Analysis of actual monitoring data from these facilities showed the 95th percent occurrence (monthly average) and 99th percent occurrence (maximum daily) levels of treatment to be 28.1 mg/L and 44.4 mg/L, respectively. The study recommended limitations of 30 mg/L and 45 mg/L as the monthly average and maximum daily TSS limitations for a model NPDES permit. Using BPJ, the Regional Water Board is establishing average monthly and maximum daily, TBELs for TSS of 30 and 50 mg/L, respectively.

d. The final TBELs contained in this Order are summarized below.

Summary of Technology-based Effluent Limitations
Discharge Point 001

Parameter	Units	Effluent Limitations			
		Average Monthly	Maximum Daily	Instantaneous Minimum	Instantaneous Maximum
Flow	mgd	--	1.5	--	--
Settleable Solids	mL/L-hr	0.1	0.2	--	--
Total Suspended Solids	mg/L	30	50	--	--

C. Water Quality-Based Effluent Limitations (WQBELs)

1. Scope and Authority

As specified in 40 CFR §122.44(d)(1)(i), permits are required to include WQBELs for pollutants (including toxicity) that are or may be discharged at levels that cause, have reasonable potential to cause, or contribute to an excursion above any state water quality standard. The process for determining reasonable potential and calculating WQBELs when necessary is intended to protect the designated uses of the receiving water as specified in the Basin Plan, and achieve applicable water quality objectives and criteria that are contained in other state plans and policies, or water quality criteria contained in the CTR and NTR.

2. Applicable Beneficial Uses and Water Quality Criteria and Objectives

a. ***Receiving Water***—The receiving stream is Clear Creek, which is tributary to the Sacramento River. The beneficial uses of Clear Creek, as described above in Section

III.C.1 of this Fact Sheet are municipal and domestic supply; agricultural supply, water contact recreation, including canoeing and rafting; non-contact water recreation, including aesthetic enjoyment; warm freshwater habitat; cold freshwater habitat; warm migration of aquatic organisms; cold migration of aquatic organisms; warm spawning, reproduction, and/or early development; cold spawning, reproduction, and /or early development; and wildlife habitat.

b. ***Hardness***—While no Effluent Limitation for hardness is necessary in this Order, hardness is critical to the assessment of the need for, and the development of, Effluent Limitations for certain metals. The *California Toxics Rule*, at (c)(4), states the following:

"Application of metals criteria. (i) *For purposes of calculating freshwater aquatic life criteria for metals from the equations in paragraph (b)(2) of this section, for waters with a hardness of 400 mg/L or less as calcium carbonate, the actual ambient hardness of the surface water* <u>*shall*</u> *be used in those equations*."

The State Water Resources Control Board, in footnote 19 to Water Quality Order No. 2004-0013, stated: "*We note that…the Regional Water Board…applied a variable hardness value whereby effluent limitations will vary depending on the actual, current hardness values in the receiving water. We recommend that the Regional Water Board establish either fixed or seasonal effluent limitations for metals, as provided in the SIP, rather than 'floating' effluent limitations*."

Effluent Limitations for the discharge must be set to protect the beneficial uses of the receiving water for all discharge conditions. In the absence of the option of including condition-dependent, "floating" effluent limitations that are reflective of actual conditions at the time of discharge, Effluent Limitations must be set using the worst-case condition (*e.g.*, lowest ambient hardness) in order to protect beneficial uses for all discharge conditions. This Order uses the receiving water hardness of 39 mg/L as $CaCO_3$.

c. ***Assimilative Capacity/Mixing Zone***—Based on the available information, the worst-case dilution is assumed to be zero to provide protection for the receiving water beneficial uses. The impact of assuming zero assimilative capacity within the receiving water is that discharge limitations are end-of-pipe limits with no allowance for dilution within the receiving water.

d. ***Translators***—USEPA regulations at 40 CFR 122.45(c) require effluent limitations for metals to be expressed as total recoverable metal, and therefore, attention must be given to ensure that analytical data and water quality standards for metals are expressed accordingly. Appendix 3 of the SIP provides Conversion Factors (CFs) or translators, for certain metals including arsenic, cadmium, copper, silver, and zinc, to convert total recoverable concentrations to dissolved concentrations and vice versa. Since the Discharger did not provide translators specific to the receiving water, this Order used CFs from the SIP summarized below:

Parameter	Conversion Factor Freshwater Acute Criteria

Arsenic	1.000
Copper	0.960
Silver	0.85
Zinc	0.978

3. **Determining the Need for WQBELs**

a. CWA section 301 (b)(1) requires NPDES permits to include effluent limitations that achieve technology-based standards and any more stringent limitations necessary to meet water quality standards. Water quality standards include Regional Water Board Basin Plan beneficial uses and narrative and numeric water quality objectives, State Water Board-adopted standards, and federal standards, including the CTR and NTR. The Basin Plan includes numeric site-specific water quality objectives and narrative objectives for toxicity, chemical constituents, and tastes and odors. The narrative toxicity objective states: "*All waters shall be maintained free of toxic substances in concentrations that produce detrimental physiological responses in human, plant, animal, or aquatic life.*" (Basin Plan at III-8.00.) With regards to the narrative chemical constituents objective, the Basin Plan states that waters shall not contain chemical constituents in concentrations that adversely affect beneficial uses. At minimum, "…*water designated for use as domestic or municipal supply (MUN) shall not contain concentrations of chemical constituents in excess of the maximum contaminant levels (MCLs)*" in Title 22 of CCR. The narrative tastes and odors objective states: "*Water shall not contain taste- or odor-producing substances in concentrations that impart undesirable tastes or odors to domestic or municipal water supplies or to fish flesh or other edible products of aquatic origin, or that cause nuisance, or otherwise adversely affect beneficial uses.*"

b. For determining whether the discharge has reasonable potential to cause, or contribute to an in-stream excursion above a narrative objective, federal regulations prescribe three discrete methods (40 CFR 122.44 (d)(vi)). The Regional Water Board often relies on the second method, because the USEPA's water quality criteria have been developed using methodologies that are subject to public review, as are the individual recommended criteria guidance documents. USEPA's ambient water quality criteria are used as means of supplementing the integrated approach to toxics control, and in some cases deriving numeric limitations to protect receiving waters from toxicity as required in the Basin Plan's narrative toxicity objective. In addition, when determining effluent limitations for a discharger, the dilution of the effluent in the receiving water may be considered where areas of dilution are defined. However, when a receiving water is impaired by a particular pollutant or stressor, limited or no pollutant assimilative capacity may be available in spite of the available dilution. In these instances, and depending upon the nature of the pollutant, effluent limitations may be set equal to or less than the applicable water quality criteria, which are applied at the point of discharge such that the discharge will not cause or contribute to the receiving stream exceedance of water quality standards established to protect the beneficial uses.

c. Reasonable potential (RP) was determined by calculating the projected maximum effluent concentration (MEC) for each constituent and comparing it to applicable water quality criteria; if a criterion was exceeded, the discharge was determined to have reasonable potential to exceed a water quality objective for that constituent. The projected MEC is determined by multiplying the observed MEC (the maximum detected concentration) by a factor that accounts for statistical variation. The multiplying factor is determined (for 99% confidence level and 99% probability basis) using the number of results available and the coefficient of variation (standard deviation divided by the mean) of the sample results. In accordance with the SIP, non-detect results were counted as one-half the detection level when calculating the mean and standard deviation. For all constituents for which the source of the applicable water quality standard is the CTR or NTR, the multiplying factor is 1. Reasonable potential evaluation was based on the methods used in the SIP and the USEPA Technical Support Document for Water Quality-Based Toxics Control [EPA/505/2-90-001].

d. Federal regulations require effluent limitations for all pollutants that are or may be discharged at a level that will cause or have the reasonable potential to cause, or contribute to an in-stream excursion above a narrative or numerical water quality standard. Based on information submitted as part of the application, in studies, and as directed by monitoring and reporting programs, the Regional Water Board finds that the discharge has a reasonable potential to cause or contribute to an in-stream excursion above a water quality standard for total residual chorine. Effluent limitations for this constituent is included in this Order. A summary of the reasonable potential analysis is provided in Reasonable Potential Analysis (Attachment G), and a detailed discussion of each constituent of concern is provided below.

e. Effluent limitations for water quality-based effluent limitations were calculated in accordance with Section 1.4 of the SIP and the TSD. Section IV.C.4 of this Fact Sheet describes the methodology used for calculating effluent limitations.

   i. ***Dichlorobromomethane***—The CTR includes a dichlorobromomethane criterion of 0.56 µg/L for the protection of human health and is based on a one-in-a-million cancer risk for waters from which both water and organisms are consumed. Dichlorobromomethane was detected in an effluent sample collected 13 July 2001 at a concentration of 3 µg/L. The observed MEC is greater than the water quality criteria, however insufficient information exists to establish reasonable potential. Therefore, instead of limitations, additional monitoring has been established for dichlorobromomethane with a reopener provision should monitoring results indicate that the discharge has the reasonable potential to cause or contribute to an exceedance of a water quality standard. No dichlorobromomethane has been detected in the receiving water.

   ii. ***Bis (2-Ethylhexyl) Phthalate***—No bis (2-ethylhexyl) phthalate has been detected in the effluent. However, bis (2-ethylhexyl) phthalate was detected in the upstream receiving water at a concentration of 7 µg/L. The measured receiving water concentration value for bis (2-ethylhexyl) phthalate exceeds the applicable CTR human health criteria of 1.8 µg/L. Because bis (2-ethylhexyl) phthalate was only

sampled twice in the effluent and is a common contaminant of sample containers, sampling apparatus, and analytical equipment, and sources of the detected bis (2-ethylhexyl) phthalate may be from plastics used for sampling or analytical equipment, the Regional Water Board is not establishing effluent limitations for bis (2-ethylhexyl) phthalate at this time. Instead of limitations, additional monitoring has been established for bis (2-ethylhexyl) phthalate with a reopener provision should monitoring results indicate that the discharge has the reasonable potential to cause or contribute to an exceedance of a water quality standard.

iii. ***Aluminum***—USEPA developed National Recommended Ambient Water Quality Criteria for protection of freshwater aquatic life for aluminum. The recommended four-day average (chronic) and one-hour average (acute) criteria for aluminum are 87 µg/L and 750 µg/L, respectively, for waters with a pH of 6.5 to 9.0. USEPA recommends that the ambient criteria are protective of the aquatic beneficial uses of receiving waters in lieu of site-specific criteria. Aluminum was detected in an effluent sample collected 25 January 2006 at a concentration of 93.2 µg/L. The observed MEC is greater than the water quality criteria, however insufficient information exists to establish reasonable potential. Therefore, instead of limitations, additional monitoring has been established for aluminum with a reopener provision should monitoring results indicate that the discharge has the reasonable potential to cause or contribute to an exceedance of a water quality standard.

iv. ***Iron***—The observed iron MEC was detected in an effluent sample collected 25 January 2006 at a concentration of 52 µg/L. The projected maximum effluent iron concentration is 686 µg/L. The observed MEC is not greater than the water quality criteria; however, the projected MEC is greater than the water quality criteria. Insufficient information is available to determine whether iron in the discharge has reasonable potential to cause or contribute to an in-stream excursion above applicable water quality criteria or objectives. There is only one effluent data point available. Instead of limitations, additional monitoring has been established for iron with a reopener provision should monitoring results indicate that the discharge has the reasonable potential to cause or contribute to an exceedance of a water quality standard.

v. ***Manganese***—The Secondary Maximum Contaminant Level (MCL)-Consumer Acceptance Limit is 50 µg/L for manganese. Manganese was detected in an effluent sample collected 25 January 2006 at a concentration of 93.83 µg/L. The observed MEC is greater than the water quality criteria, however insufficient information exists to establish reasonable potential. Therefore, instead of limitations, additional monitoring has been established for manganese with a reopener provision should monitoring results indicate that the discharge has the reasonable potential to cause or contribute to an exceedance of a water quality standard.

vi. ***Electrical Conductivity @ 25 ºC***— Insufficient information is available to determine whether electrical conductivity @ 25 ºC in the discharge has reasonable potential to cause or contribute to an in-stream excursion above applicable water quality criteria or objectives. There is only one effluent data point available. Instead of limitations,

additional monitoring has been established for electrical conductivity @ 25 ºC with a reopener provision should monitoring results indicate that the discharge has the reasonable potential to cause or contribute to an exceedance of a water quality standard.

vii. ***Chlorine, Total Residual***—The Discharger currently uses chlorine as part of the water treatment process, the Regional Water Board finds that there is a reasonable potential for chlorine to be present in the effluent above these applicable water quality criteria. Chlorine can cause toxicity to aquatic organisms when discharged to surface waters. USEPA recommends, in its Ambient Water Quality Criteria for the protection of fresh water aquatic life, maximum 1-hour average and 4-day average chlorine concentrations of 0.019 mg/L and 0.011 mg/L, respectively. The use of chlorine as a disinfectant presents a reasonable potential that it could be discharged in toxic concentrations. Effluent Limitations for chlorine have been included in this Order to protect the receiving stream aquatic life beneficial uses. Effluent Limitations have been established based on the ambient water quality criteria for chlorine. Average one-hour and four-day limitations for chlorine, based on these criteria, are included in this Order.

viii. ***pH—***The Basin Plan includes a water quality objective for surface waters (except for Goose Lake) that the "*…pH shall not be depressed below 6.5 nor raised above 8.5. Changes in normal ambient pH levels shall not exceed 0.5 in fresh waters with designated COLD or WARM beneficial uses*." Effluent Limitations for pH are included in this Order and are based on the Basin Plan objectives for pH.

4. **WQBEL Calculations**

a. The Discharger conducted monitoring for priority and non-priority pollutants. The analytical results were submitted to the Regional Water Board. The results of these sampling events were used in developing this Order. All detectable results from these analyses are summarized in Table F-1, below. Effluent limitations are included in the Order to protect the beneficial uses of the receiving stream and to ensure that the discharge complies with the Basin Plan objective that toxic substances not be discharged in toxic amounts. All mass limitations in this Order were calculated by multiplying the concentration limitation by the reasonable measure of actual flow and the appropriate unit conversion factor.

Table F-1 Detectable Results

Constituent	Units	n[3]	CV[4]	MEC[5]	Mean[6]	σ[6]	Projected MEC[5]
Antimony	µg/L	2	0.6	ND	--	--	ND

[3] n: umber of data points available.
[4] CV: coefficient of variation.
[5] MEC: maximum effluent concentration. Projected MEC: maximum predicted effluent concentration using 99th percentile multiplier. Note that multiplier is equal to "1" to all CTR constituents. ND: not detected.
[6] When calculating mean and standard deviation, ND's were calculated as ½ of the Method Detection Limits.
σ: standard deviation.

Constituent	Units	n[3]	CV[4]	MEC[5]	Mean[6]	σ[6]	Projected MEC[5]
Arsenic	µg/L	2	0.6	0.6	0.33	0.39	0.6
Chromium	µg/L	2	0.6	1.2	0.65	0.78	1.2
Copper	µg/L	2	0.6	1.6	1.5	0.14	1.6
Mercury	pg/L	3	0.6	2.2	12	20	2.2
Nickel	µg/L	2	0.6	3.9	3.5	0.64	3.9
Selenium	µg/L	2	0.6	0.2	0.23	0.035	0.2
Zinc	µg/L	2	0.6	8	5	4.2	8
Chloroform	µg/L	2	0.6	12.6	11	2.9	12.6
Dichlorobromomethane	µg/L	2	0.6	0.6	0.5	0.14	0.6
Bis (2-ethylexyl) phthalate	µg/L	2	0.6	ND	--	--	ND
Aluminum	µg/L	1	0.6	93	93	--	1229
Barium	µg/L	1	0.6	7.8	7.8	--	103
Boron	µg/L	1	0.6	6.7	6.7	--	88
Cobalt	µg/L	1	0.6	ND	--	--	ND
Iron	µg/L	1	0.6	52	52	--	686
Magnesium	µg/L	1	0.6	4000	4000	--	53000
Manganese	µg/L	1	0.6	94	94	--	1237
Molybdenum	µg/L	1	0.6	0.2	0.2	--	2.6
Titanium	µg/L	1	0.6	ND	--	--	ND
pH	standard	108	--	8.0	7.3	0.21	--
Hardness	mg/L	1	--	41	41	--	--
Electrical Conductivity @ 25 ºC	µmhos/cm	1	0.6	95	95	--	1253

b. Effluent Limitations for water quality-based limitations were calculated in accordance with Section 1.4 of the SIP and the TSD. The following paragraphs describe the general methodology used for calculating Effluent Limitations.

c. *Calculations for Dilution Ratios*

For human health criteria/objectives the dilution ratio, D_H equals zero as summarize in section IV.C.2.c of this Fact Sheet.

d. *Calculations for Effluent Limitations*—In calculating maximum effluent limitations, the effluent concentration allowances were set equal to the criteria/standards/objectives.

$$ECA_{acute} = CMC \qquad ECA_{chronic} = CCC \qquad ECA_{HH} = HH + D_{HH}\left(HH - B_{HH}\right)$$

where:

ECA_{acute}	=	effluent concentration allowance for acute (one-hour average) toxicity criterion
$ECA_{chronic}$	=	effluent concentration allowance for chronic (four-day average) toxicity criterion
ECA_{HH}	=	effluent concentration allowance for human health, agriculture, or other long-term criterion/objective
CMC	=	criteria maximum concentration (one-hour average
CCC	=	criteria continuous concentration (four-day average, unless otherwise noted)
D_{HH}	=	dilution ratio for human health, agriculture, or other long-

		term criterion/objective
HH	=	human health, agriculture, or other long-term criterion/objective
B_{HH}	=	background concentration for human health. (for carcinogens: arithmetic mean of R-001 concentrations, for non-carcinogens: observed maximum R-001 concentration; or lowest detection level if all results are non-detect)

Acute and chronic toxicity ECAs were then converted to equivalent long-term averages (LTA) using statistical multipliers and the lowest is used. Additional statistical multipliers were then used to calculate the maximum daily effluent limitation (MDEL) and the average monthly effluent limitation (AMEL). The statistical multipliers were calculated using data shown in Table F-1~~Table F-1~~.

Human health ECAs are set equal to the AMEL and a statistical multiplier is used to calculate the MDEL.

$$AMEL = mult_{AMEL}\left[\min\left(\overbrace{M_A ECA_{acute}}^{LTA_{acute}}, M_C ECA_{chronic}\right)\right]$$

$$MDEL = mult_{MDEL}\left[\min\left(M_A ECA_{acute}, \underbrace{M_C ECA_{chronic}}_{LTA_{chronic}}\right)\right]$$

$$MDEL_{HH} = \left(\frac{mult_{MDEL}}{mult_{AMEL}}\right) AMEL_{HH}$$

where:	$mult_{AMEL}$	=	statistical multiplier converting minimum LTA to AMEL
	$mult_{MDEL}$	=	statistical multiplier converting minimum LTA to MDEL
	M_A	=	statistical multiplier converting CMC to LTA
	M_C	=	statistical multiplier converting CCC to LTA

e. *Use of Assimilative Capacity*—The Discharger did not request the use of more assimilative capacity than is needed for its discharge to comply. For some constituents, more assimilative capacity is available than is needed for compliance. Therefore, in calculating effluent limitations, the calculated ECA_{HH} was compared to a projected MEC. The projected MEC is determined by multiplying the observed MEC by a factor that accounts for statistical variation. The multiplying factor is determined (for 99% confidence level and 99% probability basis) using the number of results available and the coefficient of variation (standard deviation divided by the mean) of the sample results. In accordance with the SIP, non-detect results were counted as one-half the detection level when calculating the mean. The default coefficient of variation for constituents with fewer than ten samples and/or for which 80% or more of the sample results were non-detect is 0.6. Projected MEC calculations were based on projection methods contained in the USEPA *Technical Support Document for Water Quality-Based Toxics Control* [EPA/505/2-90-001] and are summarized below.

$$p_n = (1 - confidence\ \ level)^{1/n} \quad C_{99} = (2.326\sigma - 0.5\sigma^2) \quad C_p = (z\sigma - 0.5\sigma^2)$$

where:	p_n	=	percentile represented by the highest concentration in the available data
	n	=	number of available samples
	C_{99}	=	numerator for projection factor
	C_p	=	denominator for projection factor
	σ^2	=	$ln(CV^2+1)$
	CV	=	coefficient of variation; calculated as the standard deviation divided by the mean
	z	=	normal distribution value for p_n percentile
	2.326	=	normal distribution value for 99th percentile

The projected MEC is equal to the observed MEC multiplied by $\frac{C_{99}}{C_{p_n}}$. Where the projected MEC was less than the ECA_{HH} , the projected MEC was set equal to the AMEL and the MDEL, where appropriate, was calculated as described in Calculations for Effluent Limitations IV.C.4.d.

f. *Mass-based Effluent Limitations*—Mass-based effluent limitations were based upon the reasonable measure of actual flow of 0.30 mgd.

g. USEPA recommends a maximum daily limitation rather than an average weekly limitation for water quality based permitting.

Summary of Water Quality-based Effluent Limitations
Discharge Point 001

Parameter	Units	Effluent Limitations			
		Average Monthly	Maximum Daily	Instantaneous Minimum	Instantaneous Maximum
pH	standard units	--	--	6.0	9.0

a. **Total Residual Chlorine**: Effluent total residual chlorine shall not exceed the following:

i. 0.01 mg/L as a four-day average; and
ii. 0.02 mg/L as a one-hour average.

5. **Whole Effluent Toxicity (WET)**

For compliance with the Basin Plan's narrative toxicity objective, this Order requires the Discharger to conduct whole effluent toxicity testing for acute and chronic toxicity, as specified in the Monitoring and Reporting Program (Attachment E, Section V.). This Order also contains effluent limitations for acute toxicity and requires the Discharger to investigate the causes of, and identify corrective actions to reduce or eliminate effluent toxicity.

a. **Acute Toxicity**: The Basin Plan further states that "…*effluent limits based upon acute biotoxicity tests of effluents will be prescribed*…" Effluent limitations for acute toxicity are included in this Order.

b. **Chronic Aquatic Toxicity.** The Basin Plan contains a narrative toxicity objective that states, "All waters shall be maintained free of toxic substances in concentrations that produce detrimental physiological responses in human, plant, animal, or aquatic life." (Basin Plan at III-8.00.)

No dilution has been granted for the chronic condition. Therefore, chronic toxicity testing results exceeding 1 chronic toxicity unit (TUc) demonstrates the discharge has a reasonable potential to cause or contribute to an exceedance of the Basin Plan's narrative toxicity objective.

Numeric chronic WET effluent limitations have not been included in this order. However, to ensure compliance with the Basin Plan's narrative toxicity objective, the Discharger is required to conduct chronic whole effluent toxicity testing, as specified in the Monitoring and Reporting Program (Attachment E, Section V.). Furthermore, Special Provisions VI.C.2.a of this Order requires the Discharger to investigate the causes of, and identify and implement corrective actions to reduce or eliminate effluent toxicity. If the discharge demonstrates a pattern of toxicity exceeding the numeric toxicity monitoring trigger, the Discharger is required to initiate a Toxicity Reduction Evaluation (TRE), in accordance with an approved TRE work plan. The numeric toxicity monitoring trigger is not an effluent limitation; it is the toxicity threshold at which the

Discharger is required to perform accelerated chronic toxicity monitoring, as well as, the threshold to initiate a TRE if a pattern of effluent toxicity has been demonstrated.

D. Final Effluent Limitations

1. 40 CFR §122.45 states that:

   a. "*Except In the case of POTWs, calculation of any permit limitations…shall be based upon a reasonable measure of actual production of the facility.*"

   b. "*All pollutants limited in permits shall have limitations…expressed in terms of mass except…*[f]*or pH, temperature, radiation, or other pollutants which cannot appropriately be expressed by mass…Pollutants limited in terms of mass additionally may be limited in terms of other units of measurement, and the permit shall require the permittee to comply with both limitations*."

   Order No. 5-00-010 did not establish mass-based effluent limitations. This Order establishes mass-based effluent limitations for total suspended solids, dichlorobromomethane, aluminum, manganese, and total residual chlorine using the Facility's reasonable measure of actual flow of 0.30 mgd.

2. **Flow.** Order No. 5-01-081 established a maximum daily discharge flow limitation of 2.6 mgd. Based on new information and on the Discharger's application, the current design flow of the water treatment plant is 1.5 mgd, the maximum controlled discharge rate from all settling ponds at the Facility combined. This Order replaces the Order No. 5-01-081 maximum daily flow limitation with 1.5 mgd for discharge to Clear Creek.

3. **Settleable Solids.** The Basin Plan includes a water quality objective that water shall not contain substances in concentrations that result in the deposition of material that causes nuisance or adversely affects beneficial uses. Order No. 5-01-081 established effluent limitations for settleable solids based on the Basin Plan and BPJ. This Order carries over the settleable solids effluent limitations established by Order No. 5-01-081. These effluent limitations reflect removal efficiencies for properly designed, constructed, and operated water treatment systems.

4. **Total Suspended Solids.** The Basin Plan includes a water quality objective that receiving waters not contain suspended material in concentrations that cause nuisance or adversely affect beneficial uses. Using an NPDES model from several water treatment plant permits, the Regional Water Board is establishing average monthly and maximum daily for TSS of 30 and 50 mg/L, respectively, based on the Basin Plan water quality objective and BPJ.

5. **pH.** The Basin Plan includes a water quality objective for surface waters (except for Goose Lake) that the "…pH shall not be depressed below 6.5 nor raised above 8.5. Based on the effluent monitoring data provided by the Discharger from January 2000 through September 2005, pH results did not fall out of range of the Basin Plan pH objective. Order No. 5-01-081 established a pH effluent limitation that "[t]he discharge shall not have a pH less than 6.0

or greater than 9.0." Receiving water monitoring ensures that the discharge does not cause the receiving water pH to be out of the range of 6.5 to 8.5.

6. **Chlorine, Total Residual.** Order No. 5-01-081 established an MDEL for chlorine residual of 0.02 mg/L. The limitation was established because chlorine is used at the Facility and presents a reasonable potential that it could be discharged in toxic concentrations. Since chlorine is an acutely toxic constituent, an average one-hour limitation has been added. Average one-hour and four-day limitations for chlorine, based on USEPA Ambient Water Quality Criteria for the protection of fresh water aquatic life, are included in this Order and replaces the previous chlorine residual MDEL.

7. The following table summarizes the final TBELs and WQBELs established in this Order. All effluent limitations in this Order are at least as stringent as the effluent limitations in the previous Order and are consistent with the anti-backsliding requirements set in this Order.

Summary of Final Effluent Limitations
Discharge Point 001

Parameter	Units	Effluent Limitations			
		Average Monthly	Maximum Daily	Instantaneous Minimum	Instantaneous Maximum
Flow	mgd	--	1.5	--	--
Settleable Solids	mL/L-hr	0.1	0.2	--	--
Total Suspended Solids	mg/L	30	50	--	--
pH	standard units	--	--	6.0	9.0

a. **Total Residual Chlorine**: Effluent total residual chlorine shall not exceed the following:

   i. 0.01 mg/L as a four-day average; and
   ii. 0.02 mg/L as a one-hour average.

b. **Acute Toxicity**: Survival of aquatic organisms in 96-hour bioassays of undiluted waste shall be no less than:

   Minimum for any one bioassay - - - - - - - - - - - - - - - - - - - 70%
   Median for any three or more consecutive bioassays - - - - 90%

E. Interim Effluent Limitations - Not Applicable

F. Land Discharge Specifications – Not Applicable

G. Reclamation Specifications – Not Applicable

V. RATIONALE FOR RECEIVING WATER LIMITATIONS

A. Surface Water

1. The CWA, Section 303(a-c), required states to adopt numeric criteria where they are necessary to protect designated uses. The Regional Water Board adopted numeric criteria in the Basin Plan. The Basin Plan is a regulatory reference for meeting the state and federal requirements for water quality control (40 CFR §131.20). State Water Board Resolution No. 68-16, the Antidegradation Policy, does not allow changes in water quality less than that prescribed in Water Quality Control Plans (Basin Plans). The Basin Plan states that "[t]*he numerical and narrative water quality objectives define the least stringent standards that the Regional Water Board will apply to regional waters in order to protect the beneficial uses*." This Order contains Receiving Water Limitations based on the Basin Plan numerical and narrative water quality objectives for biostimulatory substances, chemical constituents, color, dissolved oxygen, floating material, oil and grease, pH, pesticides, radioactivity, salinity, sediment, settleable material, suspended material, tastes and odors, temperature, toxicity and turbidity.

2. ***Dissolved Oxygen***—Clear Creek has been designated as having the beneficial use of cold freshwater aquatic habitat (COLD). For water bodies designated as having COLD as a beneficial use, the Basin Plan includes a water quality objective of maintaining a minimum of 7.0 mg/L of dissolved oxygen. A receiving water limitation of 7.0 mg/L for dissolved oxygen is included in this Order.

   For surface water bodies outside of the Delta, the Basin Plan includes the water quality objective that "…*the monthly median of the mean daily dissolved oxygen (DO) concentration shall not fall below 85 percent of saturation in the main water mass, and the 95 percentile concentration shall not fall below 75 percent of saturation.*" This objective is included as a receiving water limitation in this Order.

3. ***Fecal coliform***—Clear Creek has been designated as having the beneficial use of contact recreation (REC-1). For water bodies designated as having REC-1 as a beneficial use, the Basin Plan includes a water quality objective limiting the "…*fecal coliform concentration based on a minimum of not less than five samples for any 30-day period*…" to a maximum geometric mean of 200 MPN/100 mL. The objective also states that "…[no] *more than ten percent of the total number of samples taken during any 30-day period* [shall] *exceed 400/100 ml*." This objective is included in this Order as a receiving water limitation.

4. ***pH***—For all surface water bodies in the Sacramento River and San Joaquin River basins (except for Goose Lake), the Basin Plan includes water quality objectives stating that "[t]*he*

pH shall not be depressed below 6.5 nor raised above 8.5. Changes in normal ambient pH levels shall not exceed 0.5 in fresh waters with designated COLD or WARM beneficial uses." This Order includes receiving water limitations for both pH range and pH change.

The Basin Plan allows an appropriate averaging period for pH change in the receiving stream. Since there is no technical information available that indicates that aquatic organisms are adversely affected by shifts in pH within the 6.5 to 8.5 range, an averaging period is considered appropriate and a monthly averaging period for determining compliance with the 0.5 receiving water pH limitation is included in this Order.

5. ***Temperature***—Clear Creek has the beneficial uses of both COLD and WARM. The Basin Plan includes the objective that "[a]*t no time or place shall the temperature of COLD or WARM intrastate waters be increased more than 5ºF above natural receiving water temperature*." This Order includes a receiving water limitation based on this objective.

6. ***Turbidity***—The Basin Plan includes the following objective: "*Increases in turbidity attributable to controllable water quality factors shall not exceed the following limits*:

   - *Where natural turbidity is between 0 and 5 Nephelometric Turbidity Units (NTUs), increases shall not exceed 1 NTU.*
   - *Where natural turbidity is between 5 and 10 NTUs, increases shall not exceed 20 percent.*
   - *Where natural turbidity is between 50 and 100 NTUs, increases shall not exceed 10 NTU.*
   - *Where natural turbidity is greater than 100 NTUs, increases shall not exceed 10 percent.*"

B. Groundwater – Not Applicable

VI. RATIONALE FOR MONITORING AND REPORTING REQUIREMENTS

Section 122.48 of 40 CFR requires all NPDES permits to specify recording and reporting of monitoring results. Sections 13267 and 13383 of the California Water Code authorize the Water Boards to require technical and monitoring reports. The Monitoring and Reporting Program, Attachment E of this Order, establishes monitoring and reporting requirements to implement federal and state requirements. The following provides the rationale for the monitoring and reporting requirements contained in the Monitoring and Reporting Program for this facility.

A. Influent Monitoring – Not Applicable

B. Effluent Monitoring

1. The SIP states that if "…*all reported detection limits of the pollutant in the effluent are greater than or equal to the C* [water quality criterion or objective] *value, the RWQCB*

[Regional Water Board] *shall establish interim requirements…that require additional monitoring for the pollutant….*" All reported detection limits for dichlorobromomethane, aluminum, manganese, and total residual chlorine are greater than or equal to corresponding applicable water quality criteria or objectives. Monitoring for these constituents has been included in this Order in accordance with the SIP.

2. Effluent monitoring is also included for constituents for which insufficient information is available to determine the need for effluent limitations.

3. Pursuant to the requirements of 40 CFR §122.44(i)(2) effluent monitoring is required for all constituents with effluent limitations. Effluent monitoring is necessary to assess compliance with effluent limitations, assess the effectiveness of the treatment process, and to assess the impacts of the discharge on the receiving stream and groundwater.

C. Whole Effluent Toxicity Testing Requirements

The Basin Plan states that "[a]*ll waters shall be maintained free of toxic substances in concentrations that produce detrimental physiological responses in human, plant, animal, or aquatic life. This objective applies regardless of whether the toxicity is caused by a single substance or the interactive effect of multiple substances*." The Basin Plan requires that "[a]*s a minimum, compliance with this objective…shall be evaluated with a 96-hour bioassay*." This Order requires both acute and chronic toxicity monitoring to evaluate compliance with this water quality objective.

The receiving surface water for the Facility is Clear Creek, an inland surface water providing freshwater aquatic habitat. Beneficial uses of Clear Creek include municipal and domestic supply; agricultural supply, including stock watering; water contact recreation, including canoeing and rafting; non-contact water recreation, including aesthetic enjoyment; warm freshwater habitat; cold freshwater habitat; cold migration of aquatic organisms; warm spawning, reproduction, and/or early development; cold spawning, reproduction, and /or early development; and wildlife habitat, it is appropriate to use a cold/warm-water species such as *Oncorhynchus mykiss* (rainbow trout) for aquatic toxicity bioassays.

USEPA has approved test methods for of *Pimephales promelas*, *Selenastrum capricornutum*, and *Ceriodaphnia dubia* for assessing chronic toxicity in freshwater organisms.

D. Receiving Water Monitoring

1. Surface Water

a. Receiving water monitoring is necessary to assess compliance with receiving water limitations and to assess the impacts of the discharge on the receiving stream.

2. Groundwater – Not Applicable

a. This Order does not require the Discharger to conduct groundwater monitoring. There is no current evidence to indicate that operation of the settling ponds pose a threat to

groundwater quality. If any information becomes available indicating adverse groundwater impacts, a groundwater investigation and subsequent monitoring may be required.

E. Other Monitoring Requirements

1. Low Threat Dischargers Monitoring

In addition to regulating discharges of settled water treatment plant filter backwash, this Order also regulates the discharge of low threat wastewaters. Low threat wastewaters include well development water, construction dewatering, pump/well testing, pipeline/tank pressure testing, pipeline/tank flushing or dewatering, condensate discharges, unspecified water supply system discharges and other miscellaneous dewatering/low threat discharges. Previously, the Discharger was required to seek permit coverage under General Waste Discharge Requirements Order No. 5-00-175 for such discharges. Pursuant to Section VI.C.6.b.iii of this Order, the Discharger must prepare and implement an acceptable Pollution Prevention and Monitoring and Reporting Program (PPMRP) in order to have permit coverage for low threat discharges under this Order.

2. Sludge Monitoring

This Order require the Discharger to update and implement a Sludge Disposal Plan to assure proper handling and disposal of solids that are collected and/or generated at the Facility.

VII. RATIONALE FOR PROVISIONS

A. Standard Provisions

Standard Provisions, which in accordance with 40 CFR §§122.41 and 122.42, apply to all NPDES discharges and must be included in every NPDES permit, are provided in Attachment D to the Order.

Title 40 CFR Section 122.41(a)(1) and (b) through (n) establish conditions that apply to all state-issued NPDES permits. These conditions must be incorporated into the permits either expressly or by reference. If incorporated by reference, a specific citation to the regulations must be included in the Order. 40 CFR Section 123.25(a)(12) allows the State to omit or modify conditions to impose more stringent requirements. In accordance with Section 123.25, this Order omits federal conditions that address enforcement authority specified in 40 CFR Sections 122.41(j)(5) and (k)(2) because the enforcement authority under the CWC is more stringent. In lieu of these conditions, this Order incorporates by reference CWC section 13387(e).

B. Special Provisions

1. Reopener Provisions

a. Upon adoption of any applicable water quality standard for receiving waters by the Regional Water Board or the State Water Board pursuant to the CWA and regulations adopted thereunder, this permit may be reopened and receiving water limitations added.

b. If the chronic toxicity testing specified in Section VI.C.2.a of this Order indicates that the discharge causes, has the reasonable potential to cause, or contributes to an in-stream excursion above the water quality objective for toxicity, this Order shall be reopened and a chronic toxicity limitation included and/or a limitation for the specific toxicant identified in the TRE included. Additionally, if a chronic toxicity water quality objective is adopted by the State Water Board, this Order may be reopened and a limitation based on that objective included.

c. The Regional Water Board may reopen this Order if review of any effluent or receiving water monitoring shows that the discharge has reasonable potential to cause or contribute to an exceedance of a water quality objective, or the discharge is causing groundwater degradation.

d. The Regional Water Board may reopen this Order to implement regulations contained in 40 CFR 503 and incorporate appropriate time schedules and technical standards.

2. **Special Studies and Additional Monitoring Requirements**

a. **Chronic Whole Effluent Toxicity Requirements (Special Provisions VI.C.2.a.).** The Basin Plan contains a narrative toxicity objective that states, "*All waters shall be maintained free of toxic substances in concentrations that produce detrimental physiological responses in human, plant, animal, or aquatic life.*" (Basin Plan at III-8.00.) Adequate WET data is not available to determine if the discharge has reasonable potential to cause or contribute to an in-stream excursion above of the Basin Plan's narrative toxicity objective. Attachment E of this Order requires chronic WET monitoring for demonstration of compliance with the narrative toxicity objective.

3. **Best Management Practices and Pollution Prevention – Not Applicable**

4. **Construction, Operation, and Maintenance Specifications – Not Applicable**

5. **Special Provisions for Municipal Facilities (POTWs Only) – Not Applicable**

6. **Other Special Provisions**

a. The Discharger is responsible for all necessary steps to adequately maintain and operate its water treatment plant. This Order requires the Discharger to update and implement Sludge Disposal Plan to assure proper handling and disposal of solids that are collected and/or generated at the Facility.

b. Currently, the Discharger is obligated to seek authorization under the Regional Water Board Order No. 5-00-175, *General Order for Dewatering and Other Low Threat Discharges to Surface Waters*, prior to discharging non-backwash waters such as well

development water, construction dewatering, pump/well testing, pipeline/tank pressure testing, pipeline/tank flushing or dewatering, condensate discharges, unspecified water supply system discharges, and other miscellaneous dewatering/low threat discharges. Requirements in this Order pertaining to such discharges are meant to authorize and regulate such low threat discharges so that the Discharger is no longer obligated to seek coverage under the General Permit.

c. All technical reports required herein that involve planning, investigation, evaluation, or design, or other work requiring interpretation and proper application of engineering or geologic sciences, shall be prepared by or under the direction of persons registered to practice in California pursuant to California Business and Professions Code, Sections 6735, 7835, and 7835.1. To demonstrate compliance with Title 16, CCR, Sections 415 and 3065, all technical reports must contain a statement of the qualifications of the responsible registered professional(s). As required by these laws, completed technical reports must bear the signature(s) and seal(s) of the registered professional(s) in a manner such that all work can be clearly attributed to the professional(s) responsible for the work.

d. In the event the Discharger does not comply or will be unable to comply for any reason, with any prohibition or limitation contained in this Order, this Order requires the Discharger to notify the Regional Water Board by telephone (530) 224-4845 (or to the Regional Water Board staff person assigned to the facility) within 24 hours of having knowledge of such noncompliance, and shall confirm this notification in writing within five days, unless the Regional Water Board waives confirmation. The written notification shall include the information required by Federal Standard Provision V.E.1 [*40 CFR §122.41(l)(6)(i)*].

e. Prior to making any change in the discharge point, place of use, or purpose of use of the wastewater, the Discharger must obtain approval of, or clearance from the State Water Board (Division of Water Rights).

   In the event of any change in control or ownership of land or waste discharge facilities presently owned or controlled by the Discharger, the Discharger shall notify the succeeding owner or operator of the existence of this Order by letter, a copy of which shall be immediately forwarded to this office.

   To assume operation under this Order, the succeeding owner or operator must apply in writing to the Executive Officer requesting transfer of the Order. The request must contain the requesting entity's full legal name, the State of incorporation if a corporation, address and telephone number of the persons responsible for contact with the Regional Water Board and a statement. The statement shall comply with the signatory paragraph of Federal Standard Provision V.B.5 and state that the new owner or operator assumes full responsibility for compliance with this Order. Failure to submit the request shall be considered a discharge without requirements, a violation of the CWC. Transfer shall be approved or disapproved in writing by the Executive Officer.

7. **Compliance Schedules - Not Applicable**

VIII. PUBLIC PARTICIPATION

The Regional Water Board is considering the issuance of waste discharge requirements (WDRs) that will serve as a NPDES permit for Clear Creek Community Services District Water Treatment Plant. As a step in the WDR adoption process, the Regional Water Board staff has developed tentative WDRs. The Regional Water Board encourages public participation in the WDR adoption process.

A. Notification of Interested Parties

The Regional Water Board has notified the Discharger and interested agencies and persons of its intent to prescribe waste discharge requirements for the discharge and has provided them with an opportunity to submit their written comments and recommendations. Notification was provided through Internet posting and physical posting at the Facility and local US post office, if allowed.

B. Written Comments

The staff determinations are tentative. Interested persons are invited to submit written comments concerning these tentative WDRs. Comments should be submitted either in person or by mail to the Executive Office at the Regional Water Board at the address above on the cover page of this Order.

To be fully responded to by staff and considered by the Regional Water Board, written comments should be received at the Regional Water Board offices by 5:00 p.m. on **Date**.

C. Public Hearing

The Regional Water Board will hold a public hearing on the tentative WDRs during its regular Board meeting on the following date and time and at the following location:

Date: **September 21 and 22, 2006**
Time: **Public Hearing Time**
Location: Central Valley Regional Water Quality Control Board, Sacramento Office
11020 Sun Center Drive, #200
Rancho Cordova, CA 95670

Interested persons are invited to attend. At the public hearing, the Regional Water Board will hear testimony, if any, pertinent to the discharge, WDRs, and permit. Oral testimony will be heard; however, for accuracy of the record, important testimony should be in writing.

Please be aware that dates and venues may change. Our web address is http://www.waterboards.ca.gov/centralvalley where you can access the current agenda for changes in dates and locations.

D. Waste Discharge Requirements Petitions

Any aggrieved person may petition the State Water Board to review the decision of the Regional Water Board regarding the final WDRs. The petition must be submitted within 30 days of the Regional Water Board's action to the following address:

State Water Resources Control Board
Office of Chief Counsel
P.O. Box 100, 1001 I Street
Sacramento, CA 95812-0100

E. Information and Copying

The Report of Waste Discharge (RWD), related documents, tentative effluent limitations and special provisions, comments received, and other information are on file and may be inspected at 415 Knollcrest Drive, Suite 100, Redding, CA 96002 at any time between 8:30 a.m. and 4:45 p.m., Monday through Friday. Copying of documents may be arranged through the Regional Water Board by calling (530) 224-4845.

F. Register of Interested Persons

Any person interested in being placed on the mailing list for information regarding the WDRs and NPDES permit should contact the Regional Water Board, reference this facility, and provide a name, address, and phone number.

G. Additional Information

Requests for additional information or questions regarding this order should be directed to Bryan J. Smith at (530) 226-3425.

ATTACHMENT G – REASONABLE POTENTIAL ANALYSIS

Parameter (units)	n[1]	CV[2]	RPA multiplier[3]	MEC[4]	Projected MEC[4]	B[5]	WQO/ WQC[6]	Source	RP[7]
Antimony, Total Recoverable (µg/L)	2	0.6	1	ND	ND	0.1	6	California Primary Maximum Contaminant Level	N
Arsenic, Total Recoverable (µg/L)	2	0.6	1	0.6	0.6	0.4	10	USEPA Primary Maximum Contaminant Level	N
Chromium (III) Total Recoverable (µg/L)	2	0.6	1	1.2	1.2	2	50	California Primary Maximum Contaminant Level	N
Copper, Total Recoverable (µg/L)	2	0.6	1	1.6	1.6	1.4	4.2 / 5.8	California Toxics Rule 4-day / 1-hour Average	N
Mercury, Total Recoverable (µg/L)	3	0.6	1	0.0022	0.0022	0.0012	0.05	California Toxics Rule Sources of Drinking Water	N
Nickel, Total Recoverable (µg/L)	2	0.6	1	3.9	3.9	3.8	24 / 210	California Toxics Rule 4-day / 1-hour Average	N
Selenium, Total Recoverable (µg/L)	2	0.6	1	0.2	0.2	0.1	20	Water Quality for Agriculture Ayers and Westcot	N
Silver, Total Recoverable (µg/L)	2	0.6	1	ND	ND	0.35	0.8	California Toxics Rule Instantaneous Maximum	N
Zinc, Total Recoverable (µg/L)	2	0.6	1	8	8	14	54 / 54	California Toxics Rule 4-day / 1-hour Average	N
Chloroform (µg/L)	2	0.6	1	12.6	12.6	ND	80	USEPA Primary Maximum Contaminant Level	N
Dichlorobromomethane (µg/L)	2	0.6	1	0.6	0.6	ND	0.56	California Toxics Rule Sources of Drinking Water	Y
Bis (2-ethylhexyl) Pthalate (µg/L)	2	0.6	1	ND	ND	7	1.8	National Toxics Rule Sources of Drinking Water	I[8]
Aluminum, Total Recoverable (µg/L)	1	0.6	13.2	93.2	1230	162	87 / 750	USEPA Recommended Criteria 4-day / 1-hour Average	Y
Barium, Total Recoverable (µg/L)	1	0.6	13.2	7.8	103	9.7	1,000	California Primary MCL	N
Boron, Total Recoverable (µg/L)	1	0.6	13.2	6.7	88.4	8.1	700	Water Quality for Agriculture Ayers and Westcot	N
Cobalt, Total Recoverable (µg/L)	1	0.6	13.2	ND	ND	0.1	50	Water Quality for Agriculture Ayers and Westcot	N
Iron, Total Recoverable (µg/L)	1	0.6	13.2	52	686.4	135	300	California Secondary Maximum Contaminant Level	I[8]

[1] n: number of data points available.
[2] CV: coefficient of variation.
[3] Statistically determined 99th percentile multiplier.
[4] MEC: maximum effluent concentration. Projected MEC: maximum predicted effluent concentration using 99th percentile multiplier. Note that multiplier is equal to "1" if the parameter is a CTR constituent.
[5] B: Background receiving water concentration. ND=non-detect, NA=not available.
[6] WQO: water quality objective. WQC: water quality criteria.
[7] RP: Reasonable potential.
[8] I: Indeterminate.

Parameter (units)	**n[1]**	**CV[2]**	**RPA multiplier[3]**	**MEC[4]**	**Projected MEC[4]**	**B[5]**	**WQO/ WQC[6]**	**Source**	**RP[7]**
Manganese, Total Recoverable (µg/L)	1	0.6	13.2	93.8	1238.2	10.3	50	California Secondary Maximum Contaminant Level	Y
Molybdenum, Total Recoverable (µg/L)	1	0.6	13.2	0.2	2.6	0.3	10	Water Quality for Agriculture Ayers and Westcot	N
Electrical Conductivity @ 25 ºC (µmhos/cm)	1	0.6	13.2	95	1253.1	93	700	Water Quality for Agriculture Ayers and Westcot	I[8]
Chlorine, Total Residual (mg/L)	107	0.6	1.39	0.03	0.042	NA	0.011 / 0.019	USEPA Recommended Criteria 4-day / 1-hour Average	Y

ATTACHMENT H – WATER QUALITY-BASED EFFLUENT LIMITATION CALCULATIONS

PARAMETER	Settleable Solids	Total Suspended Solids	Total Residual Chlorine
Units	mL/L-hr	mg/L	mg/L
Number of Samples	106	N/A	107
Maximum Effluent Concentration	ND	N/A	0.03
Water Quality Objectives			
Applicable Acute WQO	--	--	0.019
Applicable Chronic WQO	--	--	0.011
HH Criteria	--	--	N/A
Statistical Calculations			
CV (Selected) - Final	--	--	--
AMEL Multiplier 95th Percentile	--	--	--
MDEL Multiplier 99th Percentile	--	--	--
Aquatic Life (Freshwater) Calculations			
ECA Acute	--	--	--
ECA Chronic	--	--	--
ECA Acute Multiplier 99th Percentile	--	--	--
ECA Chronic Multiplier 99th Percentile	--	--	--
LTA Acute	--	--	--
LTA Chronic	--	--	--
minimum of LTAs	--	--	--
AMEL (Aquatic Life)	--	--	--
MDEL (Aquatic Life)	--	--	--
Human Health Calculations			
ECA HH	--	--	--
MDEL/AMEL Multiplier	--	--	--
AMEL (Human Health)	--	--	--
MDEL (Human Health)	--	--	--
Selected Limits			
Final limit - AMEL	0.1	30	0.01 (4-day average)
Final limit - MDEL	0.2	50	0.02 (1-day average)
Final limit - AMEL (lbs/day)	--	75	0.025 (4-day average)
Final limit - MDEL (lbs/day)	--	130	0.5 (1-day average)
Interim Limits			
Interim limit – MDEL	--	--	--
Interim limit - MDEL (lbs/day)	--	--	--

Notes:
Number of data points were less than 10, multipliers based on default CV = 0.6.
Mass based effluent limitations are based on the reasonable measure of actual flow = 0.30 mgd.
WQO: Water Quality Objective.
HH: Human Health.
ECA: Effluent Concentration Allowance.
LTA: Long-Term Average Concentration.
AMEL: Average Monthly Effluent Limitation.
MDEL: Maximum Daily Effluent Limitation.

ATTACHMENT I – ACRONYMS AND ABBREVIATIONS

AMEL	Average Monthly Effluent Limitation
AWEL	Average Weekly Effluent Limitation
B	Background Concentration
Basin Plan	*Water Quality Control Plan, Fourth Edition, for the Sacramento and San Joaquin River Basins*
BAT	Best Available Technology Economically Achievable
BCT	Best Conventional Pollutant Control Technology
BMP	Best Management Practices
BMPP	Best Management Practices Plan
BOD	Biochemical Oxygen Demand
BPJ	Best Professional Judgment
BPTC	Best Practicable Treatment Control technology
C	Water Quality Criteria
CCC	Criteria Continuous Concentration
CCR	California Code of Regulations
CEQA	California Environmental Quality Act
CFR	Code of Federal Regulations
CIWQS	California Integrated Water Quality System
CMC	Criteria Maximum Concentration
CSO	Combined Sewer Overflow
CTR	California Toxics Rule
CWA	Clean Water Act
CWC	California Water Code
CV	Coefficient of Variation
Discharger	Clear Creek Community Services District
DMQA	Discharge Monitoring Quality Assurance
DMR	Discharge Monitoring Reports
DNQ	Detected But Not Quantified
ECA	Effluent Concentration Allowance
EIR	Environmental Impact Report
ELAP	California Department of Health Services Environmental Laboratory Accreditation Program
ELG	Effluent Limitations, Guidelines and Standards
Facility	Clear Creek Community Services District Water Treatment Plant
gpd	gallons per day
IC	Inhibition Coefficient
IC_{15}	Concentration at which the organism is 15% inhibited
IC_{25}	Concentration at which the organism is 25% inhibited
IC_{40}	Concentration at which the organism is 40% inhibited
IC_{50}	Concentration at which the organism is 50% inhibited
LA	Load Allocations
LOEC	Lowest Observed Effect Concentration
LTA	Long-Term Average
MEC	Maximum Effluent Concentration
MCL	Maximum Contaminant Level

MDEL	Maximum Daily Effluent Limitation
MDL	Method Detection Limit
mgd	million gallons per day
ML	Minimum Level
MPN	Most Probable Number
MRP	Monitoring and Reporting Program
ND	Not Detected
NEPA	National Environmental Policy Act
NOEC	No Observable Effect Concentration
NPDES	National Pollutant Discharge Elimination System
NSPS	New Source Performance Standards
NTR	National Toxics Rule
NTU	Nephelometric Turbidity Units
PCB	Polychlorinated Biphenyls
PMP	Pollutant Minimization Plan
PMSD	Percent Minimum Significant Difference
POTW	Publicly Owned Treatment Works
PPMRP	Pollution Prevention and Monitoring and Reporting Program
QA	Quality Assurance
QA/QC	Quality Assurance/Quality Control
QC	Quality Control
Regional Water Board	California Regional Water Quality Control Board, Redding Office
RPA	Reasonable Potential Analysis
SCP	Spill Contingency Plan
SIC	Standard Industrial Classification
SIP	State Implementation Policy (*Policy for Implementation of Toxics Standards for Inland Surface Waters, Enclosed Bays, and Estuaries of California*)
SMR	Self Monitoring Reports
State Water Board	State Water Resources Control Board
SWPPP	Storm Water Pollution Prevention Plan
TAC	Test Acceptability Criteria
TBEL	Technology-Based Effluent Limitation
TDS	Total Dissolved Solids
Thermal Plan	Water Quality Control Plan for Control of Temperature in the Coastal and Interstate Water and Enclosed Bays and Estuaries of California
TIE	Toxicity Identification Evaluation
TMDL	Total Maximum Daily Load
TOC	Total Organic Carbon
TRE	Toxicity Reduction Evaluation
TSD	Technical Support Document
TSO	Time Schedule Order
TSS	Total Suspended Solids
TU	Toxic Unit
USEPA	United States Environmental Protection Agency
USGS	United States Geological Survey
WDR	Waste Discharge Requirements
WDID	Waste Discharge Identification Number

WET	Whole Effluent Toxicity
WLA	Waste Load Allocations
WQBEL	Water Quality-Based Effluent Limitation
WQLS	Water Quality Limited Segment
WWTP	Wastewater Treatment Plant